CONSTRUCTION DOCUMENTS

FOR

PROPOSED

MINOR AUTOMOTIVE REPAIR

SOUTHWEST CORNER OF US 380 AND FM 720

GREENWAY CROSS ROADS ADDITION BLK A LOT 11R

CROSSROADS, TX 76227

REFERENCES AND CONTACTS

REFERENCES

♦BOUNDARY & TOPOGRAPHIC SURVEY:
BOHLER
2600 NETWORK BLVD., SUITE 310
FRISCO, TX 75034
DATED: 05/08/2026
JOB # TXA260019.00

♦ARCHITECTURAL PLAN:
AHO ARCHITECTS, LLC
1855 DATA DRIVE, SUITE 150
HOOVER, AL 35244

♦GEOTECHNICAL REPORT:
TERRACON
PROJECT NUMBER: 94265131
DATE: 05/07/2026
8901 JOHN W. CARPENTER FREEWAY
DALLAS, TX 75247

♦CIVIL CONSTRUCTION PLANS FOR 380 AND 720 MULTIFAMILY:
BGE, INC
777 MAIN ST, SUITE 1900
FORT WORTH, TX
DATED: 06/14/2024

♦GREENWAY CROSS ROADS ADDITION INFRASTRUCTURE:
BGE, INC
777 MAIN ST, SUITE 1900
FORT WORTH, TX
DATED: 03/06/2024

GOVERNING AGENCIES

♦CITY OF DENTON LAND DEVELOPMENT
401 N. ELM ST.
DENTON, TX 76201
PHONE: (940) 349-2990
FAX: (940) 349-2991

♦COUNTY BUILDING DEPARTMENT
3900 MORSE ST.
DENTON, TX 76208
PHONE: (940) 349-2990
FAX: (940) 349-2991

♦FIRE DEPARTMENT
BRAD SEBASTIAN, FIRE MARSHAL
PHONE: (940) 349-2840
EMAIL: BRAD.SEBASTIAN@DENTONCOUNTY.GOV

♦COUNTY PLANNING DEPARTMENT
SANDRA TORRES
PHONE: (940) 365-8693
EMAIL: SANDRA.TORRES@DENTONCOUNTY.GOV

♦ENGINEERING DEPARTMENT:
STEPHEN MOORE
PHONE: (940) 349-3410
EMAIL: STEPHEN.MOORE@DENTONCOUNTY.GOV

♦PLAN REVIEW:
TINA MASSEY
PHONE: (940) 365-3410
EMAIL: TINA.MASSEY@DENTONCOUNTY.GOV

♦ STORMWATER
DOUG POWELL
PHONE: (940) 365-9693 EXT.309
EMAIL: D.POWELL@CROSSROADSTX.GOV

UTILITIES

♦POWER
COSERV ELECTRIC CO-OP
PHONE: (940) 321-7800 EXT.6900
EMAIL: TWYNN@COSERV.COM

♦GAS
COSERV ELECTRIC CO-OP
PHONE: (940) 321-7800 EXT 6900
EMAIL: TWYNN@COSERV.COM

♦WATER
MUSTANG SPECIAL UTILITY DISTRICT
PHONE: (940) 440-9561
EMAIL: BMILLER@MUSTANGWATER.COM

♦SEWER
MUSTANG SPECIAL UTILITY DISTRICT
PHONE: (940) 440-9561
EMAIL: BMILLER@MUSTANGWATER.COM

THE ABOVE REFERENCED DOCUMENTS ARE INCORPORATED BY REFERENCE AS PART OF THESE PLANS, HOWEVER, BOHLER ENGINEERING DOES NOT CERTIFY THE ACCURACY OF THE WORK REFERENCED OR DERIVED FROM THESE DOCUMENTS, BY OTHERS.

PROJECT BENCHMARKS

BM # 1
"X" CUT IN CONTRETE LOCATED N 05°03'33" E
±185' FROM THE NORTHEAST CORNER OF THE SUBJECT PROPERTY
ELEVATION = 593.87'

BM # 2
"X" CUT IN CONCRETE LOCATED N 10°00'35" E ±75.82'
NORTHEAST CORNER OF THE SUBJECT PROPERTY
ELEVATION = 592.34'

GENERAL NOTE
IT IS THE RESPONSIBILITY OF THE CONTRACTOR TO REVIEW ALL OF THE DRAWINGS AND SPECIFICATIONS ASSOCIATED WITH THIS PROJECT WORK SCOPE PRIOR TO THE INITIATION OF CONSTRUCTION. SHOULD THE CONTRACTOR FIND A CONFLICT WITH THE DOCUMENTS RELATIVE TO THE SPECIFICATIONS OR APPLICABLE CODES, IT IS THE CONTRACTOR'S RESPONSIBILITY TO NOTIFY THE PROJECT ENGINEER OF RECORD IN WRITING PRIOR TO THE START OF CONSTRUCTION. FAILURE BY THE CONTRACTOR TO NOTIFY THE PROJECT ENGINEER SHALL CONSTITUTE ACCEPTANCE OF FULL RESPONSIBILITY BY THE CONTRACTOR TO COMPLETE THE SCOPE OF THE WORK AS DEFINED BY THE DRAWINGS AND IN FULL CONFORMANCE WITH LOCAL REGULATIONS AND CODES.

AERIAL MAP
SCALE: 1" = 200'
SOURCE: NEARMAP

DEVELOPER
EXPRESS OIL CHANGE & TIRE ENGINEERS
1880 SOUTHPARK DRIVE
BIRMINGHAM, AL 35244
TYLER HENDON

OWNER
720 & 380 LTD
2808 FAIRMOUNT ST STE 100
DALLAS, TX 75201

PREPARED BY

BOHLER

CONTACT: MATHIAS HAUBERT, P.E.
(469) 458-7300 | MHAUBERT@BOHLERENG.COM
2600 NETWORK BLVD, STE 310, FRISCO, TX 75034

Sheet Index

Sheet Title	Sheet Number
COVER SHEET	C-101
GENERAL NOTES	C-102
ALTA	1 of 1
REPLAT	1 of 1
EXISTING CONDITIONS AND DEMOLITION PLAN	C-201
SITE PLAN	C-301
TRUCK TURN PLAN	C-302
GRADING PLAN	C-401
PREDEVELOPMENT DRAINAGE AREA MAP (BY OTHERS)	C-402
POSTDEVELOPMENT DRAINAGE AREA MAP	C-403
UTILITY PLAN	C-501
STORM SEWER PLAN	C-601
DRAINAGE CALCULATIONS	C-602
EROSION AND SEDIMENT CONTROL PLAN	C-801
EROSION AND SEDIMENT CONTROL NOTES AND DETAILS	C-802
CONSTRUCTION DETAILS	C-901-903
LANDSCAPE PLANTING	LP-1
LANDSCAPE DETAILS & SPECIFICATIONS	LP-2

ISSUED FOR CONSTRUCTION

SIGNATURE DATE SIGNATURE DATE

SIGNATURE DATE

THIS DOCUMENT IS NOT ISSUED BY BOHLER ENGINEERING FOR CONSTRUCTION WITHOUT THREE (3) SIGNATURES

PROJECT #: _____

REVISION DATE: _____

APPROVAL:

MITCH HAUG, P.E., MUSTANG S.U.D. DATE 07/09/2029

ALL RESPONSIBILITY FOR THE ADEQUACY OF THESE PLANS REMAINS WITH THE ENGINEER WHO PREPARED THEM. IN ACCEPTING THESE PLANS, MUSTANG SPECIAL UTILITY DISTRICT MUST RELY UPON THE ADEQUACY OF THE WORK OF THE DESIGN ENGINEER.

BOHLER™
SITE CIVIL AND CONSULTING ENGINEERING
LAND SURVEYING
PROGRAM MANAGEMENT
LANDSCAPE ARCHITECTURE
SUSTAINABLE DESIGN
PERMITTING SERVICES
TRANSPORTATION SERVICES

THE INFORMATION, DESIGN AND CONTENT OF THIS PLAN ARE PROPRIETARY AND SHALL NOT BE COPIED OR USED FOR ANY PURPOSE WITHOUT PRIOR WRITTEN AUTHORIZATION FROM BOHLER. ONLY APPROVED, SIGNED AND SEALED PLANS SHALL BE UTILIZED FOR CONSTRUCTION PURPOSES
© BOHLER

REVISIONS

REV	DATE	COMMENT	DRAWN BY / CHECKED BY
0	08/27/26	ISSUED FOR BID	MFR / SEL

Texas811
TEXAS
YOU MUST CALL 811 BEFORE ANY EXCAVATION WHETHER IT'S ON PRIVATE OR PUBLIC LAND.
1-800-344-8377
www.texas811.org

PRELIMINARY

THIS DRAWING IS INTENDED FOR MUNICIPAL AND/OR AGENCY REVIEW AND APPROVAL. IT IS NOT INTENDED AS A CONSTRUCTION DOCUMENT UNLESS INDICATED OTHERWISE.

PROJECT No.:	TXA260019.00-0A
DRAWN BY:	FR
CHECKED BY:	MJH
DATE:	06/05/2026
CAD I.D.:	P-CIVL-CNDS

PROJECT:

CONSTRUCTION DOCUMENTS

FOR

PROPOSED
MINOR AUTOMOTIVE REPAIR

SW CORNER OF US 380 & FM 720
CROSS ROADS, TX 76227
LOT 11R, BLOCK A

BOHLER™
2600 NETWORK BLVD., SUITE 310
FRISCO, TX 75034
Phone: (469) 458-7300
TX@BohlerEng.com
TBPE NO. 18065 | TBPLS NO. 10194413

PLANS PREPARED BY
BOHLER
FOR REVIEW PURPOSES ONLY
MATHIAS J. HAUBERT
LICENSE NUMBER: 138306

SHEET TITLE:

COVER SHEET

SHEET NUMBER:

C-101

ORG. DATE - 06/30/2026

Aug 25, 2026
P:\TX\20\TXA260019.00\CAD\DRAWINGS\PLAN SETS\CIVIL SITE PLANS\P-CIVL-CNDS-TXA260019.00-0A------\LAYOUT: C-101 COVER SHEET
MFR

GENERAL NOTES

(Rev. 1/2023)

1. THESE PLANS ARE SOLELY BASED ON INFORMATION THE OWNER AND OTHERS PROVIDED TO BOHLER ENGINEERING TX, LLC (HEREIN "BOHLER") PRIOR TO THE DATE ON WHICH THE PROFESSIONAL OF RECORD AND BOHLER PREPARED THESE PLANS. THE CONTRACTOR MUST FIELD VERIFY ALL EXISTING CONDITIONS AND IMMEDIATELY NOTIFY BOHLER , IN WRITING, IF ANY ACTUAL SITE CONDITIONS DIFFER FROM THOSE SHOWN ON THESE PLANS, OR IF THE PROPOSED WORK CONFLICTS WITH ANY OTHER SITE FEATURES.
2. THE CONTRACTOR MUST STRICTLY COMPLY WITH THESE NOTES AND ALL SPECIFICATIONS/REPORTS CONTAINED HEREIN. THE CONTRACTOR MUST ENSURE THAT ALL SUBCONTRACTORS FULLY AND COMPLETELY CONFORM TO AND COMPLY WITH THESE REQUIREMENTS, THESE NOTES, AND THE REQUIREMENTS ARTICULATED IN THE NOTES CONTAINED IN ALL THE OTHER DRAWINGS THAT COMPRISE THE PLAN SET OF DRAWINGS. ADDITIONAL NOTES AND SPECIFIC PLAN NOTES MAY BE FOUND ON THE INDIVIDUAL PLANS. THESE GENERAL NOTES APPLY TO THIS ENTIRE DOCUMENT PACKAGE. IT IS THE CONTRACTOR'S RESPONSIBILITY TO REVIEW ALL CONSTRUCTION CONTRACT DOCUMENTS INCLUDING, BUT NOT LIMITED TO, ALL OF THE DRAWINGS AND SPECIFICATIONS ASSOCIATED WITH THE PROJECT WORK SCOPE, PRIOR TO THE INITIATION AND COMMENCEMENT OF CONSTRUCTION.
3. PRIOR TO THE COMMENCEMENT OF CONSTRUCTION, THE CONTRACTOR MUST CONFIRM WITH THE PROFESSIONAL OF RECORD AND BOHLER THAT THE LATEST EDITION OF THE DOCUMENTS AND/OR REPORTS REFERENCED WITHIN THE PLAN REFERENCES ARE BEING USED FOR CONSTRUCTION. THIS IS THE CONTRACTOR'S SOLE AND COMPLETE RESPONSIBILITY.
4. PRIOR TO THE COMMENCEMENT OF CONSTRUCTION, THE CONTRACTOR MUST ENSURE THAT ALL REQUIRED PERMITS AND APPROVALS HAVE BEEN OBTAINED. NO CONSTRUCTION OR FABRICATION IS TO BEGIN UNTIL THE CONTRACTOR HAS RECEIVED AND THOROUGHLY REVIEWED THE CONDITIONS OF APPROVAL TO ALL PLANS AND OTHER DOCUMENTS REVIEWED AND APPROVED BY THE PERMITTING AUTHORITIES AND HAS ALSO CONFIRMED THAT ALL NECESSARY AND REQUIRED PERMITS HAVE BEEN OBTAINED. THE CONTRACTOR MUST HAVE COPIES OF ALL PERMITS AND APPROVALS ON SITE AT ALL TIMES.
5. THE CONTRACTOR MUST ENSURE THAT ALL WORK IS PERFORMED IN ACCORDANCE WITH THESE PLANS, SPECIFICATIONS/REPORTS AND CONDITIONS OF APPROVAL, AND ALL APPLICABLE REQUIREMENTS, RULES, REGULATIONS, STATUTORY REQUIREMENTS, CODES, LAWS AND STANDARDS OF ALL GOVERNMENTAL ENTITIES WITH JURISDICTION OVER THIS PROJECT, AND ALL PROVISIONS IN AND CONDITIONS OF THE CONSTRUCTION CONTRACT WITH THE OWNER/DEVELOPER INCLUDING ALL EXHIBITS, ATTACHMENTS AND ADDENDA TO SAME.
6. PRIOR TO THE COMMENCEMENT OF CONSTRUCTION, THE CONTRACTOR MUST COORDINATE THE BUILDING LAYOUT BY CAREFULLY REVIEWING THE MOST CURRENT ARCHITECTURAL, CIVIL AND STRUCTURAL CONSTRUCTION DOCUMENTS (INCLUDING, BUT NOT LIMITED TO, MECHANICAL, ELECTRICAL, PLUMBING AND FIRE SUPPRESSION PLANS, WHERE APPLICABLE). THE CONTRACTOR MUST IMMEDIATELY NOTIFY OWNER, ARCHITECT AND PROFESSIONAL OF RECORD AND BOHLER, IN WRITING, OF ANY CONFLICTS, DISCREPANCIES OR AMBIGUITIES WHICH EXIST BETWEEN THESE PLANS AND ANY OTHER PLANS THAT COMPRISE THE CONSTRUCTION DOCUMENTS.
7. CONTRACTOR MUST REFER TO AND ENSURE COMPLIANCE WITH THE APPROVED ARCHITECTURAL/BUILDING PLANS OF RECORD FOR EXACT LOCATIONS AND DIMENSIONS OF ENTRY/EXIT POINTS, ELEVATIONS, PRECISE BUILDING DIMENSIONS, AND EXACT BUILDING UTILITY LOCATIONS.
8. THE CONTRACTOR MUST FIELD VERIFY ALL DIMENSIONS AND MEASUREMENTS SHOWN ON THESE PLANS, PRIOR TO THE COMMENCEMENT OF CONSTRUCTION. THE CONTRACTOR MUST IMMEDIATELY NOTIFY PROFESSIONAL OF RECORD AND BOHLER, IN WRITING, IF ANY CONFLICTS, DISCREPANCIES, OR AMBIGUITIES EXIST PRIOR TO PROCEEDING WITH CONSTRUCTION. NO EXTRA COMPENSATION WILL BE PAID TO THE CONTRACTOR FOR WORK WHICH HAS TO BE RE-DONE OR REPAIRED DUE TO DIMENSIONS, MEASUREMENTS OR GRADES SHOWN INCORRECTLY ON THESE PLANS PRIOR TO BOTH (A) THE CONTRACTOR GIVING PROFESSIONAL OF RECORD AND BOHLER WRITTEN NOTIFICATION OF SAME AND (B) PROFESSIONAL OF RECORD AND BOHLER, THEREAFTER, PROVIDING THE CONTRACTOR WITH WRITTEN AUTHORIZATION TO PROCEED WITH SUCH ADDITIONAL WORK.
9. THE CONTRACTOR MUST VERIFY ALL DIMENSIONS AND MEASUREMENTS INCLUDED ON DESIGN DOCUMENTS HEREIN AND MUST NOT SCALE OFF THE DRAWINGS DUE TO POTENTIAL PRINTING INACCURACIES. ALL DIMENSIONS AND MEASUREMENTS ARE TO BE CHECKED AND CONFIRMED BY THE GENERAL CONTRACTOR PRIOR TO PREPARATION OF SHOP DRAWINGS, FABRICATION/ORDERING OF PARTS AND MATERIALS AND COMMENCEMENT OF SITE WORK. SITE PLAN DRAWINGS ARE NOT INTENDED AS SURVEY DOCUMENTS. DIMENSIONS SUPERSEDE GRAPHICAL REPRESENTATIONS. THE CONTRACTOR MUST MAKE CONTRACTOR'S OWN MEASUREMENTS FOR LAYOUT OF IMPROVEMENTS.
10. THE OWNER AND CONTRACTOR MUST BE FAMILIAR WITH AND RESPONSIBLE FOR THE PROCUREMENT OF ANY AND ALL CERTIFICATIONS REQUIRED FOR THE ISSUANCE OF A CERTIFICATE OF OCCUPANCY.
11. WHEN INCLUDED AS ONE OF THE REFERENCED DOCUMENTS, THE GEOTECHNICAL REPORT, SPECIFICATIONS AND RECOMMENDATIONS SET FORTH THEREIN ARE A PART OF THE REQUIRED CONSTRUCTION DOCUMENTS AND, IN CASE OF CONFLICT, DISCREPANCY OR AMBIGUITY, THE MORE STRINGENT REQUIREMENTS AND/OR RECOMMENDATIONS CONTAINED IN: (A) THE PLANS; AND (B) THE GEOTECHNICAL REPORT AND RECOMMENDATIONS, MUST TAKE PRECEDENCE UNLESS SPECIFICALLY NOTED OTHERWISE ON THE PLANS. THE CONTRACTOR MUST NOTIFY THE PROFESSIONAL OF RECORD AND BOHLER, IN WRITING, OF ANY SUCH CONFLICT, DISCREPANCY OR AMBIGUITY BETWEEN THE GEOTECHNICAL REPORT AND PLANS AND SPECIFICATIONS, PRIOR TO PROCEEDING WITH ANY FURTHER WORK. IF A GEOTECHNICAL REPORT WAS NOT CREATED, THEN THE CONTRACTOR MUST FOLLOW AND COMPLY WITH ALL OF THE REQUIREMENTS OF ANY AND ALL MUNICIPAL, COUNTY, STATE, AND FEDERAL LAWS AND APPLICABLE SPECIFICATIONS WHICH HAVE JURISDICTION OVER THIS PROJECT.
12. PROFESSIONAL OF RECORD AND BOHLER ARE NEITHER LIABLE NOR RESPONSIBLE FOR ANY SUBSURFACE CONDITIONS AND FURTHER, HAS NO LIABILITY FOR ANY HAZARDOUS MATERIALS, HAZARDOUS SUBSTANCES, OR POLLUTANTS ON, ABOUT OR UNDER THE PROPERTY.
13. THE CONTRACTOR IS RESPONSIBLE FOR IDENTIFYING WHEN AND WHERE SHORING IS REQUIRED AND FOR INSTALLING ALL SHORING REQUIRED DURING EXCAVATION (TO BE PERFORMED IN ACCORDANCE WITH CURRENT OSHA STANDARDS) AND ANY ADDITIONAL PRECAUTIONS TO BE TAKEN TO ASSURE THE STABILITY OF ADJACENT, NEARBY AND CONTIGUOUS STRUCTURES AND PROPERTIES. ALL OF THIS WORK IS TO BE PERFORMED AT CONTRACTOR'S SOLE COST AND EXPENSE.
14. THE CONTRACTOR MUST EXERCISE EXTREME CAUTION WHEN PERFORMING ANY WORK ACTIVITIES ADJACENT TO PAVEMENT, STRUCTURES, ETC. WHICH ARE TO REMAIN EITHER FOR AN INITIAL PHASE OF THE PROJECT OR AS PART OF THE FINAL CONDITION. THE CONTRACTOR IS RESPONSIBLE FOR TAKING ALL APPROPRIATE MEASURES REQUIRED TO ENSURE THE STRUCTURAL STABILITY OF SIDEWALKS AND PAVEMENT, UTILITIES, BUILDINGS, AND INFRASTRUCTURE WHICH ARE TO REMAIN, AND TO PROVIDE A SAFE WORK AREA FOR THIRD PARTIES, PEDESTRIANS AND ANYONE INVOLVED WITH THE PROJECT.
15. DEBRIS MUST NOT BE BURIED ON THE SUBJECT SITE. ALL DEMOLITION AND CONSTRUCTION WASTES, UNSUITABLE EXCAVATED MATERIAL, EXCESS SOIL AND DEBRIS (SOLID WASTE) MUST BE DISPOSED OF IN ACCORDANCE WITH THE REQUIREMENTS OF ANY AND ALL MUNICIPAL, COUNTY, STATE, AND FEDERAL LAWS AND APPLICABLE CODES WHICH HAVE JURISDICTION OVER THIS PROJECT OR OVER THE CONTRACTOR.
16. IT IS THE CONTRACTOR'S SOLE RESPONSIBILITY TO MAINTAIN RECORDS TO DEMONSTRATE PROPER AND FULLY COMPLIANT DISPOSAL ACTIVITIES, TO BE PROMPTLY PROVIDED TO THE OWNER UPON REQUEST.
17. THE CONTRACTOR MUST REPAIR, AT CONTRACTOR'S SOLE COST, ALL DAMAGE DONE TO ANY NEW OR EXISTING CONSTRUCTION OR PROPERTY DURING THE COURSE OF CONSTRUCTION, INCLUDING BUT NOT LIMITED TO DRAINAGE, UTILITIES, PAVEMENT, STRIPING, CURB, ETC. AND MUST BEAR ALL COSTS ASSOCIATED WITH SAME TO INCLUDE, BUT NOT BE LIMITED TO, REDESIGN, RE-SURVEY, RE-PERMITTING AND CONSTRUCTION. THE CONTRACTOR IS RESPONSIBLE FOR AND MUST REPLACE ALL SIGNAL INTERCONNECTION CABLE, WIRING CONDUITS, AND ANY UNDERGROUND ACCESSORY EQUIPMENT DAMAGED DURING CONSTRUCTION AND MUST BEAR ALL COSTS ASSOCIATED WITH SAME. THE REPAIR OF ANY SUCH NEW OR EXISTING CONSTRUCTION OR PROPERTY MUST RESTORE SUCH CONSTRUCTION OR PROPERTY TO A CONDITION EQUIVALENT TO OR BETTER THAN THE CONDITIONS PRIOR TO COMMENCEMENT OF THE CONSTRUCTION, AND IN CONFORMANCE WITH APPLICABLE CODES, LAWS, RULES, REGULATIONS, STATUTORY REQUIREMENTS AND STATUTES. THE CONTRACTOR MUST BEAR ALL COSTS ASSOCIATED WITH SAME. THE CONTRACTOR MUST, PROMPTLY, DOCUMENT ALL EXISTING DAMAGE AND NOTIFY, IN WRITING, THE OWNER AND THE CONSTRUCTION MANAGER PRIOR TO THE START OF CONSTRUCTION.
18. THE PROFESSIONAL OF RECORD AND BOHLER ARE NOT RESPONSIBLE FOR AND HAVE NO CONTRACTUAL, LEGAL OR OTHER RESPONSIBILITIES FOR JOB SITE SAFETY JOB SITE SUPERVISION, OR ANYTHING RELATED TO SAME. THE PROFESSIONAL OF RECORD AND BOHLER HAVE NOT BEEN RETAINED TO PERFORM OR TO BE RESPONSIBLE FOR JOB SITE SAFETY, SAME BEING WHOLLY OUTSIDE OF PROFESSIONAL OF RECORD'S AND BOHLER SERVICES AS RELATED TO THE PROJECT. THE PROFESSIONAL OF RECORD AND BOHLER ARE NOT RESPONSIBLE TO IDENTIFY OR REPORT ANY JOB SITE SAFETY ISSUES OR ANY JOB SITE CONDITIONS, AT ANY TIME.
19. THE CONTRACTOR MUST IMMEDIATELY IDENTIFY IN WRITING, TO THE PROFESSIONAL OF RECORD AND BOHLER , ANY DISCREPANCIES THAT MAY OR COULD AFFECT THE PUBLIC SAFETY, HEALTH OR GENERAL WELFARE, OR PROJECT COST. IF THE CONTRACTOR PROCEEDS WITH CONSTRUCTION WITHOUT PROVIDING PROPER WRITTEN NOTIFICATION AS DESCRIBED ABOVE, IT WILL BE AT THE CONTRACTOR'S OWN RISK AND, FURTHER, THE CONTRACTOR MUST INDEMNIFY, DEFEND AND HOLD HARMLESS THE PROFESSIONAL OF RECORD AND BOHLER FOR ANY AND ALL DAMAGES, COSTS, INJURIES, ATTORNEY'S FEES AND THE LIKE WHICH RESULT FROM OR ARE IN ANY WAY RELATED TO SAME INCLUDING, BUT NOT LIMITED TO, ANY THIRD PARTY AND FIRST PARTY CLAIMS.
20. THE PROFESSIONAL OF RECORD AND BOHLER ARE NOT RESPONSIBLE FOR ANY INJURY OR DAMAGES RESULTING FROM THE CONTRACTOR'S FAILURE TO BUILD OR CONSTRUCT IN STRICT ACCORDANCE WITH THE APPROVED PLANS, AND CURRENT CODES, RULES, STATUTES AND THE LIKE. IF THE CONTRACTOR AND/OR OWNER FAIL TO BUILD OR CONSTRUCT IN STRICT ACCORDANCE WITH APPROVED PLANS, RULES, STATUTES, CODES AND THE LIKE, THE CONTRACTOR AND/OR OWNER AGREE TO AND MUST JOINTLY, INDEPENDENTLY, SEPARATELY, AND SEVERALLY INDEMNIFY AND HOLD THE PROFESSIONAL OF RECORD AND BOHLER HARMLESS FOR AND FROM ALL INJURIES, CLAIMS AND DAMAGES THAT PROFESSIONAL OF RECORD AND BOHLER SUFFER AND ANY AND ALL COSTS THAT PROFESSIONAL OF RECORD AND BOHLER INCUR AS RELATED TO SAME.
21. ALL CONTRACTORS MUST CARRY AT LEAST THE MINIMUM AMOUNT OF THE SPECIFIED AND COMMERCIALLY REASONABLE STATUTORY WORKER'S COMPENSATION INSURANCE, EMPLOYER'S LIABILITY INSURANCE AND COMMERCIAL GENERAL LIABILITY INSURANCE (CGL) INCLUDING ALSO ALL UMBRELLA COVERAGES. ALL CONTRACTORS MUST HAVE THEIR CGL POLICIES ENDORSED TO NAME BOHLER , AND ITS PAST, PRESENT AND FUTURE OWNERS, OFFICERS, DIRECTORS, PARTNERS, SHAREHOLDERS, MEMBERS, PRINCIPALS, COMMISSIONERS, AGENTS, SERVANTS, EMPLOYEES, AFFILIATES, SUBSIDIARIES, AND RELATED ENTITIES, AND ITS SUBCONTRACTORS AND SUBCONSULTANTS AS ADDITIONAL NAMED INSUREDS AND TO PROVIDE CONTRACTUAL LIABILITY COVERAGE SUFFICIENT TO INSURE (DEFEND, IF APPLICABLE) AND HOLD HARMLESS AND INDEMNITY OBLIGATIONS ASSUMED AND AGREED TO BY THE CONTRACTOR HEREIN. ALL CONTRACTORS MUST FURNISH BOHLER WITH CERTIFICATIONS OF INSURANCE OR CERTIFICATES OF INSURANCE AS EVIDENCE OF THE REQUIRED INSURANCE COVERAGES PRIOR TO COMMENCING ANY WORK AND UPON RENEWAL OF EACH POLICY DURING THE ENTIRE PERIOD OF CONSTRUCTION AND FOR TWO YEARS AFTER THE COMPLETION OF CONSTRUCTION AND AFTER ALL PERMITS ARE ISSUED, WHICHEVER DATE IS LATER. IN ADDITION, ALL CONTRACTORS AGREE THAT THEY WILL, TO THE FULLEST EXTENT PERMITTED UNDER THE LAW, INDEMNIFY, DEFEND AND HOLD HARMLESS BOHLER AND ITS PAST, PRESENT AND FUTURE OWNERS, OFFICERS, DIRECTORS, PARTNERS, SHAREHOLDERS, MEMBERS, PRINCIPALS, COMMISSIONERS, AGENTS, SERVANTS, EMPLOYEES, AFFILIATES, SUBSIDIARIES, AND RELATED ENTITIES, AND ITS SUBCONTRACTORS AND SUBCONSULTANTS FROM AND AGAINST ANY DAMAGES, INJURIES, CLAIMS, ACTIONS, PENALTIES, EXPENSES, PUNITIVE DAMAGES, TORT DAMAGES, STATUTORY CLAIMS, STATUTORY CAUSES OF ACTION, LOSSES, CAUSES OF ACTION, LIABILITIES OR COSTS, INCLUDING, BUT NOT LIMITED TO, REASONABLE ATTORNEYS' FEES AND DEFENSE COSTS, ARISING OUT OF OR IN ANY WAY CONNECTED WITH OR TO THE PROJECT, INCLUDING ALL CLAIMS BY EMPLOYEES OF THE CONTRACTOR(S), ALL CLAIMS BY THIRD PARTIES AND ALL CLAIMS RELATED TO THE PROJECT. THE CONTRACTOR MUST NOTIFY PROFESSIONAL OF RECORD, IN WRITING, AT LEAST THIRTY (30) DAYS PRIOR TO ANY TERMINATION, SUSPENSION OR CHANGE OF ITS INSURANCE HEREUNDER.
22. THE PROFESSIONAL OF RECORD AND BOHLER ARE NOT RESPONSIBLE FOR CONSTRUCTION METHODS, MEANS, TECHNIQUES OR PROCEDURES, GENERALLY OR FOR THE CONSTRUCTION MEANS, METHODS, TECHNIQUES OR PROCEDURES FOR COMPLETION OF THE WORK DEPICTED BOTH ON THESE PLANS, AND FOR ANY CONFLICTS IN SCOPE AND REVISIONS THAT RESULT FROM SAME. THE CONTRACTOR IS FULLY AND SOLELY RESPONSIBLE FOR DETERMINING THE MEANS AND METHODS FOR COMPLETION OF THE WORK, PRIOR TO THE COMMENCEMENT OF CONSTRUCTION.
23. NEITHER THE PROFESSIONAL ACTIVITIES OF BOHLER, NOR THE PRESENCE OF BOHLER AND/OR ITS PAST, PRESENT AND FUTURE OWNERS, OFFICERS, DIRECTORS, PARTNERS, SHAREHOLDERS, MEMBERS, PRINCIPALS, COMMISSIONERS, AGENTS, SERVANTS, EMPLOYEES, AFFILIATES, SUBSIDIARIES, AND RELATED ENTITIES, AND ITS SUBCONTRACTORS AND SUBCONSULTANTS AT A CONSTRUCTION/PROJECT SITE (HEREIN "BOHLER PARTIES"), RELIEVES OR WILL RELIEVE THE CONTRACTOR OF AND FROM CONSTRUCTION MEANS, METHODS, SEQUENCE, TECHNIQUES OR PROCEDURES NECESSARY FOR PERFORMING, OVERSEEING, SUPERINTENDING AND COORDINATING THE WORK IN ACCORDANCE WITH THE CONTRACT DOCUMENTS AND COMPLIANCE WITH ALL HEALTH AND SAFETY PRECAUTIONS REQUIRED BY ANY REGULATORY AGENCIES WITH JURISDICTION OVER THE PROJECT AND/OR PROPERTY. BOHLER PARTIES HAVE NO AUTHORITY TO EXERCISE ANY CONTROL OVER (OR ANY RESPONSIBILITY FOR) ANY CONSTRUCTION, THE CONTRACTOR OR ITS EMPLOYEES RELATING TO THEIR WORK AND ANY AND ALL HEALTH AND SAFETY PROGRAMS OR PROCEDURES. THE CONTRACTOR IS SOLELY RESPONSIBLE FOR JOB SITE SAFETY. THE CONTRACTOR MUST INDEMNIFY, DEFEND, PROTECT AND HOLD HARMLESS BOHLER PARTIES FOR AND FROM ANY LIABILITY TO BOHLER PARTIES RESULTING FROM THE CONTRACTOR'S WORK, SERVICES AND/OR VIOLATIONS OF THIS NOTE, THESE NOTES OR ANY NOTES IN THE PLAN SET AND, FURTHER, THE CONTRACTOR MUST NAME BOHLER AS AN ADDITIONAL INSURED UNDER THE GENERAL CONTRACTOR'S POLICIES OF GENERAL LIABILITY INSURANCE AS DESCRIBED ABOVE.
24. WHEN IT IS CLEARLY AND SPECIFICALLY WITHIN BOHLER'S SCOPE OF SERVICES CONTRACT WITH THE OWNER/DEVELOPER, BOHLER WILL REVIEW OR TAKE OTHER APPROPRIATE ACTION ON THE CONTRACTOR SUBMITTALS, SUCH AS SHOP DRAWINGS, PRODUCT DATA, SAMPLES, AND OTHER DATA, WHICH THE CONTRACTOR IS REQUIRED TO SUBMIT, BUT ONLY FOR THE LIMITED PURPOSE OF EVALUATING CONFORMANCE WITH THE DESIGN INTENT AND THE INFORMATION SHOWN IN THE CONSTRUCTION CONTRACT DOCUMENTS. CONSTRUCTION MEANS AND METHODS AND/OR TECHNIQUES OR PROCEDURES, COORDINATION OF THE WORK WITH OTHER TRADES, AND CONSTRUCTION SAFETY PRECAUTIONS ARE THE SOLE RESPONSIBILITY OF THE CONTRACTOR AND BOHLER HAS NO RESPONSIBILITY OR LIABILITY FOR SAME. BOHLER WILL PERFORM ITS SHOP DRAWING REVIEW WITH REASONABLE PROMPTNESS, AS CONDITIONS PERMIT. ANY DOCUMENT, DOCUMENTING BOHLER'S REVIEW OF A SPECIFIC ITEM OR LIMITED SCOPE, MUST NOT INDICATE THAT BOHLER HAS REVIEWED THE ENTIRE ASSEMBLY OF WHICH THE ITEM IS A COMPONENT. BOHLER IS NOT RESPONSIBLE FOR ANY DEVIATIONS FROM THE CONSTRUCTION DOCUMENTS. THE CONTRACTOR MUST, IN WRITING, PROMPTLY AND IMMEDIATELY BRING ANY DEVIATIONS FROM THE CONSTRUCTION DOCUMENTS TO BOHLER'S ATTENTION. BOHLER IS NOT REQUIRED TO REVIEW PARTIAL SUBMISSIONS OR THOSE FOR WHICH SUBMISSIONS OF CORRELATED ITEMS HAVE NOT BEEN RECEIVED.
25. IF THE CONTRACTOR DEVIATES FROM THESE PLANS AND/OR SPECIFICATIONS, INCLUDING THE NOTES CONTAINED HEREIN, WITHOUT FIRST OBTAINING THE PRIOR WRITTEN AUTHORIZATION OF THE PROFESSIONAL OF RECORD AND BOHLER FOR ALL DEVIATIONS WITHIN PROFESSIONAL OF RECORD'S SCOPE, THE CONTRACTOR IS SOLELY RESPONSIBLE FOR THE PAYMENT OF ALL COSTS INCURRED IN CORRECTING ANY WORK PERFORMED WHICH DEVIATES FROM THE PLANS, ALL FINES AND/OR PENALTIES ASSESSED WITH RESPECT THERETO AND ALL COMPENSATORY OR PUNITIVE DAMAGES RESULTING THEREFROM AND, FURTHER, MUST DEFEND, INDEMNIFY, PROTECT, AND HOLD HARMLESS THE PROFESSIONAL OF RECORD AND BOHLER PARTIES TO THE FULLEST EXTENT PERMITTED UNDER THE LAW, FOR AND FROM ALL FEES, ATTORNEYS' FEES, DAMAGES, COSTS, JUDGMENTS, CLAIMS, INJURIES, PENALTIES AND THE LIKE RELATED TO SAME.
26. THE CONTRACTOR IS RESPONSIBLE FOR A MAINTAINING AND PROTECTING THE TRAFFIC CONTROL PLAN AND ELEMENTS IN ACCORDANCE WITH FEDERAL, STATE, AND LOCAL REQUIREMENTS, FOR ALL WORK THAT AFFECTS PUBLIC TRAVEL EITHER IN THE RIGHT OF WAY OR ON SITE. THE COST FOR THIS ITEM MUST BE INCLUDED IN THE CONTRACTOR'S PRICE AND IS THE CONTRACTOR'S SOLE RESPONSIBILITY.
27. OWNER MUST MAINTAIN AND PRESERVE ALL PHYSICAL SITE FEATURES AND DESIGN FEATURES DEPICTED ON THE PLANS AND RELATED DOCUMENTS IN STRICT ACCORDANCE WITH THE APPROVED PLAN(S) AND DESIGN; AND, FURTHER, THE PROFESSIONAL OF RECORD AND BOHLER ARE NOT RESPONSIBLE FOR ANY FAILURE TO SO MAINTAIN OR PRESERVE SITE AND/OR DESIGN FEATURES. IF OWNER FAILS TO MAINTAIN AND/OR PRESERVE ALL PHYSICAL SITE FEATURES AND/OR DESIGN FEATURES DEPICTED ON THE PLANS AND RELATED DOCUMENTS, OWNER AGREES TO INDEMNIFY AND HOLD THE PROFESSIONAL OF RECORD AND BOHLER PARTIES, HARMLESS FOR ALL INJURIES, DAMAGES AND COSTS THAT PROFESSIONAL OF RECORD AND BOHLER INCUR AS A RESULT OF SAID FAILURE OR FAILURE TO PRESERVE.
28. THE CONTRACTOR IS SOLELY RESPONSIBLE FOR ENSURING THAT ALL CONSTRUCTION ACTIVITIES AND MATERIALS COMPLY WITH AND CONFORM TO APPLICABLE FEDERAL, STATE AND LOCAL RULES AND REGULATIONS, LAWS, ORDINANCES, AND CODES, AND ALL APPLICABLE REQUIREMENTS OF THE OCCUPATIONAL SAFETY AND HEALTH ACT OF 1970, (29 U.S.C. 651 ET SEQ.) AS AMENDED, AND ANY MODIFICATIONS, AMENDMENTS OR REVISIONS TO SAME.
29. THE CONTRACTOR MUST STRICTLY COMPLY WITH THE LATEST AND CURRENT OSHA STANDARDS AND REGULATIONS, AND/OR ANY OTHER AGENCY WITH JURISDICTION OVER EXCAVATION AND TRENCHING PROCEDURES. PROFESSIONAL OF RECORD AND BOHLER HAS NO RESPONSIBILITY FOR OR AS RELATED TO EXCAVATION AND TRENCHING PROCEDURES AND WORK.
30. THE CONTRACTOR AND THE OWNER MUST INSTALL ALL ELEMENTS AND COMPONENTS IN STRICT COMPLIANCE WITH AND IN ACCORDANCE WITH MANUFACTURER'S STANDARDS AND RECOMMENDED INSTALLATION CRITERIA AND SPECIFICATIONS. IF THE CONTRACTOR AND/OR OWNER FAIL TO DO SO, THEY AGREE TO JOINTLY, INDEPENDENTLY, SEPARATELY, COLLECTIVELY, AND SEVERALLY INDEMNIFY, DEFEND, PROTECT AND HOLD PROFESSIONAL OF RECORD AND BOHLER PARTIES HARMLESS FOR ALL INJURIES AND DAMAGES THAT PROFESSIONAL OF RECORD SUFFERS AND COSTS THAT PROFESSIONAL OF RECORD INCURS AS A RESULT OF SAID FAILURE.
31. THE CONTRACTOR IS RESPONSIBLE TO MAINTAIN AN ON-SITE STORMWATER POLLUTION PREVENTION PLAN (SWPPP) IN COMPLIANCE WITH THE ENVIRONMENTAL PROTECTION AGENCY (EPA) REQUIREMENTS OR LOCAL GOVERNING AGENCY FOR SITES WHERE ONE (1) ACRE OR MORE IS DISTURBED BY CONSTRUCTION ACTIVITIES (UNLESS THE LOCAL JURISDICTION REQUIRES A DIFFERENT THRESHOLD). THE CONTRACTOR MUST ENSURE THAT ALL ACTIVITIES, INCLUDING THOSE OF ALL SUBCONTRACTORS, ARE IN COMPLIANCE WITH THE SWPPP, INCLUDING BUT NOT LIMITED TO LOGGING ACTIVITIES (MINIMUM ONCE PER WEEK AND AFTER RAINFALL EVENTS) AND CORRECTIVE MEASURES, AS APPROPRIATE AND FURTHER, THE CONTRACTOR IS SOLELY AND COMPLETELY RESPONSIBLE FOR FAILING TO DO SO.
32. AS CONTAINED IN THESE DRAWINGS AND ASSOCIATED DOCUMENTS PREPARED BY THE PROFESSIONAL OF RECORD AND BOHLER, THE USE OF THE WORDS 'CERTIFY' OR 'CERTIFICATION' CONSTITUTE(S) AN EXPRESSION ONLY OF PROFESSIONAL OPINION REGARDING THE INFORMATION WHICH IS THE SUBJECT OF THE PROFESSIONAL OF RECORD'S AND BOHLER KNOWLEDGE OR BELIEF AND IN ACCORDANCE WITH COMMON AND ACCEPTED PROCEDURE CONSISTENT WITH THE APPLICABLE STANDARDS OF PRACTICE, AND DOES NOT CONSTITUTE A WARRANTY OR GUARANTEE OF ANY NATURE OR TYPE, EITHER EXPRESSED OR IMPLIED, UNDER ANY CIRCUMSTANCES.

DEMOLITION NOTES

(Rev. 1/2023)

1. THE GENERAL NOTES MUST BE INCLUDED AS PART OF THIS ENTIRE DOCUMENT PACKAGE AND ARE PART OF THE CONTRACT DOCUMENTS. THE GENERAL NOTES ARE REFERENCED HEREIN, AND THE CONTRACTOR MUST REFER TO THEM AND FULLY COMPLY WITH THESE NOTES, IN THEIR ENTIRETY. THE CONTRACTOR MUST BE FAMILIAR WITH AND ACKNOWLEDGE FAMILIARITY WITH ALL OF THE GENERAL NOTES AND ALL OF THE PLANS' SPECIFIC NOTES.
2. THE CONTRACTOR MUST CONDUCT DEMOLITION/REMOVALS ACTIVITIES IN SUCH A MANNER AS TO ENSURE MINIMUM INTERFERENCE WITH ROADS, STREETS, SIDEWALKS, WALKWAYS, AND ALL OTHER ADJACENT FACILITIES. THE CONTRACTOR MUST OBTAIN ALL APPLICABLE PERMITS FROM THE APPROPRIATE GOVERNMENTAL AUTHORITY(IES) PRIOR TO THE COMMENCEMENT OF ANY ROAD OPENING OR DEMOLITION ACTIVITIES IN OR ADJACENT TO THE RIGHT-OF-WAY.
3. WHEN DEMOLITION-RELATED ACTIVITIES IMPACT ROADWAYS AND/OR ROADWAY RIGHT-OF-WAY, THE CONTRACTOR MUST PROVIDE TRAFFIC CONTROL AND GENERALLY ACCEPTED SAFE PRACTICES IN CONFORMANCE WITH THE CURRENT FEDERAL HIGHWAY ADMINISTRATION "MANUAL ON UNIFORM TRAFFIC CONTROL DEVICES" (MUTCD), AND THE FEDERAL, STATE, AND LOCAL REGULATIONS.
4. THE DEMOLITION (AND/OR REMOVALS) PLAN IS INTENDED TO PROVIDE GENERAL INFORMATION AND TO IDENTIFY ONLY CONDITIONS REGARDING ITEMS TO BE DEMOLISHED, REMOVED, AND/OR TO REMAIN.
   A. THE CONTRACTOR MUST ALSO REVIEW ALL CONSTRUCTION DOCUMENTS AND INCLUDE WITHIN THE DEMOLITION ACTIVITIES ALL INCIDENTAL WORK NECESSARY FOR THE CONSTRUCTION OF THE NEW SITE IMPROVEMENTS.
   B. THIS PLAN IS NOT INTENDED TO AND DOES NOT PROVIDE DIRECTION REGARDING THE MEANS, METHODS, SEQUENCING, TECHNIQUES AND PROCEDURES TO BE EMPLOYED TO ACCOMPLISH THE WORK. ALL MEANS, METHODS, SEQUENCING, TECHNIQUES AND PROCEDURES TO BE USED MUST BE IN STRICT ACCORDANCE AND CONFORMANCE WITH ALL STATE, FEDERAL, LOCAL, AND JURISDICTIONAL REQUIREMENTS. THE CONTRACTOR MUST COMPLY WITH ALL OSHA AND OTHER SAFETY PRECAUTIONS NECESSARY TO PROVIDE A SAFE WORK SITE FOR THE CONTRACTOR AND THE PUBLIC.
5. THE CONTRACTOR MUST PROVIDE ALL "METHODS AND MEANS" NECESSARY TO PREVENT MOVEMENT, SETTLEMENT, OR COLLAPSE OF EXISTING STRUCTURES, AND ANY OTHER IMPROVEMENTS THAT ARE REMAINING ON OR OFF SITE. THE CONTRACTOR, AT THE CONTRACTOR'S SOLE COST, MUST REPAIR ALL DAMAGE TO ALL ITEMS AND FEATURES THAT ARE TO REMAIN. CONTRACTOR MUST USE NEW MATERIAL FOR ALL REPAIRS. CONTRACTOR'S REPAIRS MUST INCLUDE THE RESTORATION OF ALL ITEMS AND FEATURES REPAIRED TO THEIR PRE-DEMOLITION CONDITION, OR BETTER. CONTRACTOR MUST PERFORM ALL REPAIRS AT THE CONTRACTOR'S SOLE EXPENSE.
6. THE PROFESSIONAL OF RECORD AND BOHLER ARE NOT RESPONSIBLE FOR JOB SITE SAFETY OR SUPERVISION. THE CONTRACTOR MUST PROCEED WITH THE DEMOLITION IN A SYSTEMATIC AND SAFE MANNER, COMPLYING WITH ALL OSHA REQUIREMENTS, TO ENSURE PUBLIC AND CONTRACTOR SAFETY AND SAFETY TO ALL PROPERTY ON THE SITE OR ADJACENT OR NEAR TO THE SAME.
7. THE CONTRACTOR IS RESPONSIBLE FOR JOB SITE SAFETY, WHICH MUST INCLUDE, BUT IS NOT LIMITED TO, THE INSTALLATION AND MAINTENANCE OF BARRIERS, FENCING, OTHER APPROPRIATE AND/OR NECESSARY SAFETY FEATURES AND ITEMS NECESSARY TO PROTECT THE PUBLIC FROM AREAS OF CONSTRUCTION AND CONSTRUCTION ACTIVITIES. THE CONTRACTOR MUST SAFEGUARD THE SITE AS NECESSARY TO PERFORM THE DEMOLITION IN SUCH A MANNER AS TO PREVENT THE ENTRY OF ALL UNAUTHORIZED PERSONS AT ANY TIME, TO OR NEAR THE DEMOLITION AREA.
8. PRIOR TO THE COMMENCEMENT OF ANY SITE ACTIVITY AND ANY DEMOLITION ACTIVITY, THE CONTRACTOR MUST, IN WRITING, RAISE ANY QUESTIONS CONCERNING THE ACCURACY OR INTENT OF THESE PLANS AND/OR SPECIFICATIONS, ALL CONCERNS OR QUESTIONS REGARDING THE APPLICABLE SAFETY STANDARDS, AND/OR THE SAFETY OF THE CONTRACTOR AND/OR THIRD PARTIES IN PERFORMING THE WORK ON THIS PROJECT. ANY SUCH CONCERNS MUST BE CONVEYED TO THE PROFESSIONAL OF RECORD AND BOHLER, IN WRITING AND MUST ADDRESS ALL ISSUES AND ITEMS RESPONDED TO, BY THE PROFESSIONAL OF RECORD AND BY BOHLER, IN WRITING. ALL DEMOLITION ACTIVITIES MUST BE PERFORMED IN ACCORDANCE WITH THE REQUIREMENTS OF THESE PLANS AND SPECIFICATIONS AND ALL APPLICABLE FEDERAL, STATE AND LOCAL REGULATIONS, RULES, REQUIREMENTS, STATUTES, ORDINANCES AND CODES.
9. THE CONTRACTOR MUST BECOME FAMILIAR WITH THE APPLICABLE UTILITY SERVICE PROVIDER REQUIREMENTS AND IS RESPONSIBLE FOR ALL COORDINATION REGARDING UTILITY DEMOLITION AND/OR DISCONNECTION AS IDENTIFIED OR REQUIRED FOR THE PROJECT. THE CONTRACTOR MUST PROVIDE THE OWNER WITH WRITTEN NOTIFICATION THAT THE EXISTING UTILITIES AND SERVICES HAVE BEEN TERMINATED, REMOVED AND/OR ABANDONED IN ACCORDANCE WITH THE JURISDICTION AND UTILITY COMPANY REQUIREMENTS AND ALL OTHER APPLICABLE REQUIREMENTS, RULES, STATUTES, LAWS, ORDINANCES AND CODES.
10. PRIOR TO COMMENCING ANY DEMOLITION, THE CONTRACTOR MUST:
    A. OBTAIN ALL REQUIRED PERMITS AND MAINTAIN THE SAME ON SITE FOR REVIEW BY THE PROFESSIONAL OF RECORD AND ALL PUBLIC AGENCIES WITH JURISDICTION THROUGHOUT THE DURATION OF THE PROJECT, SITE WORK, AND DEMOLITION WORK.
    B. NOTIFY, AT A MINIMUM, THE MUNICIPAL ENGINEER, DESIGN ENGINEER, AND LOCAL SOIL CONSERVATION JURISDICTION, AT LEAST 72 BUSINESS HOURS PRIOR TO THE COMMENCEMENT OF WORK.
    C. INSTALL THE REQUIRED SOIL EROSION AND SEDIMENT CONTROL MEASURES PRIOR TO SITE DISTURBANCE, AND MAINTAIN SAID CONTROLS UNTIL SITE IS STABILIZED
    D. IN ACCORDANCE WITH STATE LAW, THE CONTRACTOR MUST CALL THE STATE ONE-CALL DAMAGE PROTECTION SYSTEM FOR UTILITY MARK OUT, IN ADVANCE OF ANY EXCAVATION.
    E. LOCATE AND PROTECT ALL UTILITIES AND SERVICES, INCLUDING BUT NOT LIMITED TO GAS, WATER, ELECTRIC, SANITARY AND STORM SEWER, TELEPHONE, CABLE, FIBER OPTIC CABLE, ETC. WITHIN AND ADJACENT TO THE LIMITS OF PROJECT ACTIVITIES. THE CONTRACTOR MUST USE AND COMPLY WITH THE REQUIREMENTS OF THE APPLICABLE UTILITY NOTIFICATION SYSTEM TO LOCATE ALL UNDERGROUND UTILITIES.
    F. PROTECT AND MAINTAIN IN OPERATION, ALL ACTIVE UTILITIES AND SYSTEMS THAT ARE NOT BEING REMOVED DURING ANY DEMOLITION ACTIVITIES.
    G. ARRANGE FOR AND COORDINATE WITH THE APPLICABLE UTILITY SERVICE PROVIDER(S) FOR THE TEMPORARY OR PERMANENT TERMINATION OF SERVICE REQUIRED BY THE PROJECT PLANS AND SPECIFICATIONS REGARDING THE METHODS AND MEANS TO CONSTRUCT SAME. THESE ARE NOT THE PROFESSIONAL OF RECORD'S OR BOHLER RESPONSIBILITY. IN THE EVENT OF ABANDONMENT, THE CONTRACTOR MUST PROVIDE THE UTILITY ENGINEER AND OWNER WITH IMMEDIATE WRITTEN NOTIFICATION THAT THE EXISTING UTILITIES AND SERVICES HAVE BEEN TERMINATED AND ABANDONED IN ACCORDANCE WITH JURISDICTIONAL AND UTILITY COMPANY REQUIREMENTS.
    H. ARRANGE FOR AND COORDINATE WITH THE APPLICABLE UTILITY SERVICE PROVIDER(S) REGARDING WORKING "OFF-PEAK" HOURS OR ON WEEKENDS AS NECESSARY OR AS REQUIRED TO MINIMIZE THE IMPACT ON, OF, AND TO THE AFFECTED PARTIES. WORK REQUIRED TO BE PERFORMED "OFF-PEAK" IS TO BE PERFORMED AT NO ADDITIONAL COST TO THE OWNER.
    I. IN THE EVENT THE CONTRACTOR DISCOVERS ANY HAZARDOUS MATERIAL, THE REMOVAL OF WHICH IS NOT ADDRESSED IN THE PROJECT PLANS AND SPECIFICATIONS OR THE CONTRACT WITH THE OWNER/DEVELOPER, THE CONTRACTOR MUST IMMEDIATELY CEASE ALL WORK IN THE AREA OF DISCOVERY, AND IMMEDIATELY NOTIFY, IN WRITING AND VERBALLY, THE OWNER, PROFESSIONAL OF RECORD AND BOHLER, THE DISCOVERY OF SUCH MATERIALS TO PURSUE PROPER AND COMPLIANT REMOVAL OF SAME.
11. THE CONTRACTOR MUST NOT PERFORM ANY EARTH MOVEMENT ACTIVITIES, DEMOLITION OR REMOVAL OF FOUNDATION WALLS, FOOTINGS, OR OTHER MATERIALS WITHIN THE LIMITS OF DISTURBANCE, UNLESS SAME IS IN STRICT ACCORDANCE AND CONFORMANCE WITH THE PROJECT PLANS AND SPECIFICATIONS, OR PURSUANT TO THE WRITTEN DIRECTION OF THE OWNER'S STRUCTURAL OR GEOTECHNICAL ENGINEER.
12. DEMOLITION ACTIVITIES AND EQUIPMENT MUST NOT USE OR INCLUDE AREAS OUTSIDE THE DEFINED PROJECT LIMIT LINE, WITHOUT SPECIFIC WRITTEN PERMISSION AND AUTHORITY OF AND FROM THE OWNER AND ALL GOVERNMENTAL AGENCIES WITH JURISDICTION.
13. THE CONTRACTOR MUST BACKFILL ALL EXCAVATION RESULTING FROM, OR INCIDENTAL TO, DEMOLITION ACTIVITIES. BACKFILL MUST BE ACCOMPLISHED WITH APPROVED BACKFILL MATERIALS AND MUST BE SUFFICIENTLY COMPACTED TO SUPPORT ALL NEW IMPROVEMENTS AND MUST BE PERFORMED IN COMPLIANCE WITH THE RECOMMENDATIONS AND GUIDANCE ARTICULATED IN THE GEOTECHNICAL REPORT. BACKFILLING MUST OCCUR IMMEDIATELY AFTER DEMOLITION ACTIVITIES AND MUST BE PERFORMED SO AS TO PREVENT WATER ENTERING THE EXCAVATION. FINISHED SURFACES MUST BE GRADED TO PROMOTE POSITIVE DRAINAGE. THE CONTRACTOR IS RESPONSIBLE FOR COMPACTION TESTING AND MUST SUBMIT SUCH REPORTS AND RESULTS TO THE PROFESSIONAL OF RECORD AND THE OWNER.
14. EXPLOSIVES MUST NOT BE USED WITHOUT PRIOR WRITTEN CONSENT FROM BOTH THE OWNER AND ALL APPLICABLE, NECESSARY AND REQUIRED GOVERNMENTAL AUTHORITIES. PRIOR TO COMMENCING ANY EXPLOSIVE PROGRAM AND/OR ANY DEMOLITION ACTIVITIES, THE CONTRACTOR MUST ENSURE AND OVERSEE THE INSTALLATION OF ALL OF THE REQUIRED PERMIT AND EXPLOSIVE CONTROL MEASURES THAT THE FEDERAL, STATE, AND LOCAL GOVERNMENTS REQUIRE. THE CONTRACTOR IS ALSO RESPONSIBLE TO CONDUCT AND PERFORM ALL INSPECTION AND SEISMIC VIBRATION TESTING THAT IS REQUIRED TO MONITOR THE EFFECTS ON ALL LOCAL STRUCTURES AND THE LIKE.
15. IN ACCORDANCE WITH FEDERAL, STATE, AND/OR LOCAL STANDARDS, THE CONTRACTOR MUST USE DUST CONTROL MEASURES TO LIMIT AIRBORNE DUST AND DIRT RISING AND SCATTERING IN THE AIR. AFTER THE DEMOLITION IS COMPLETE, THE CONTRACTOR MUST CLEAN ALL ADJACENT STRUCTURES AND IMPROVEMENTS TO REMOVE ALL DUST AND DEBRIS WHICH THE DEMOLITION OPERATIONS CAUSE. THE CONTRACTOR IS RESPONSIBLE FOR RETURNING ALL ADJACENT AREAS TO THEIR "PRE-DEMOLITION" CONDITION AT CONTRACTOR'S SOLE COST.
16. PAVEMENT MUST BE SAW CUT IN STRAIGHT LINES. ALL DEBRIS FROM REMOVAL OPERATIONS MUST BE REMOVED FROM THE SITE AT THE TIME OF EXCAVATION. STOCKPILING OF DEBRIS OUTSIDE OF APPROVED AREAS WILL NOT BE PERMITTED, INCLUDING BUT NOT LIMITED TO, THE PUBLIC RIGHT-OF-WAY.
17. THE CONTRACTOR MUST MAINTAIN A RECORD SET OF PLANS WHICH INDICATES THE LOCATION OF EXISTING UTILITIES THAT ARE CAPPED, ABANDONED IN PLACE, OR RELOCATED DUE TO DEMOLITION ACTIVITIES. THIS RECORD DOCUMENT MUST BE PREPARED IN A NEAT AND WORKMAN-LIKE MANNER AND TURNED OVER TO THE OWNER/DEVELOPER UPON COMPLETION OF THE WORK, ALL OF WHICH IS AT THE CONTRACTOR'S SOLE COST.
18. THE CONTRACTOR MUST EMPTY, CLEAN AND REMOVE FROM THE SITE ALL UNDERGROUND STORAGE TANKS, IF ENCOUNTERED, IN ACCORDANCE WITH FEDERAL, STATE, COUNTY AND LOCAL REQUIREMENTS, PRIOR TO CONTINUING CONSTRUCTION IN THE AREA AROUND THE TANK WHICH EMPTYING, CLEANING AND REMOVAL ARE AT THE CONTRACTOR'S SOLE COST.

SITE LAYOUT NOTES

(Rev. 1/2020)

1. THE GENERAL NOTES MUST BE INCLUDED AS PART OF THIS ENTIRE DOCUMENT PACKAGE AND ARE PART OF THE CONTRACT DOCUMENTS. THE GENERAL NOTES ARE REFERENCED HEREIN, AND THE CONTRACTOR MUST REFER TO THEM AND FULLY COMPLY WITH THESE NOTES, IN THEIR ENTIRETY. THE CONTRACTOR MUST BE FAMILIAR WITH AND ACKNOWLEDGE FAMILIARITY WITH ALL OF THE GENERAL NOTES AND ALL OF THE PLANS' SPECIFIC NOTES.
2. PRIOR TO THE COMMENCEMENT OF GENERAL CONSTRUCTION, THE CONTRACTOR MUST INSTALL SOIL EROSION CONTROL AND ANY STORMWATER POLLUTION PREVENTION PLAN (SWPPP) MEASURES NECESSARY, AS INDICATED ON THE APPROVED SOIL EROSION AND SEDIMENT CONTROL PLAN AND IN ACCORDANCE WITH APPLICABLE AND/OR APPROPRIATE AGENCIES' GUIDELINES TO PREVENT SEDIMENT AND/OR LOOSE DEBRIS FROM WASHING ONTO ADJACENT PROPERTIES OR THE RIGHT OF WAY.
3. ALL DIRECTIONAL/TRAFFIC SIGNING AND PAVEMENT STRIPING MUST CONFORM TO THE LATEST STANDARDS OF THE MANUAL ON UNIFORM TRAFFIC CONTROL DEVICES (MUTCD) AND ANY APPLICABLE STATE OR LOCALLY APPROVED SUPPLEMENTS, GUIDELINES, RULES, REGULATIONS, STANDARDS AND THE LIKE.
4. THE LOCATIONS OF PROPOSED UTILITY POLES AND TRAFFIC SIGNS SHOWN ON THE PLANS ARE SCHEMATIC AND PRELIMINARY. THE CONTRACTOR IS SOLELY RESPONSIBLE FOR FIELD-VERIFYING THEIR LOCATION. THE CONTRACTOR MUST COORDINATE THE RELOCATION OF TRAFFIC SIGNS WITH THE ENTITY WITH JURISDICTION OVER THE PROJECT.
5. ALL DIMENSIONS SHOWN ARE TO BOTTOM FACE OF CURB, EDGE OF PAVEMENT, OR EDGE OF BUILDING, EXCEPT WHEN DIMENSION IS TO A PROPERTY LINE, STAKE OUT OF LOCATIONS OF INLETS, LIGHT POLES, ETC. MUST BE PERFORMED IN STRICT ACCORDANCE WITH THE DETAILS, UNLESS NOTED CLEARLY OTHERWISE.

GRADING NOTES

(Rev. 1/2023)

1. THE GENERAL NOTES MUST BE INCLUDED AS PART OF THIS ENTIRE DOCUMENT PACKAGE AND ARE PART OF THE CONTRACT DOCUMENTS. THE GENERAL NOTES ARE REFERENCED HEREIN, AND THE CONTRACTOR MUST REFER TO THEM AND FULLY COMPLY WITH THESE NOTES, IN THEIR ENTIRETY. THE CONTRACTOR MUST BE FAMILIAR WITH AND ACKNOWLEDGE FAMILIARITY WITH ALL OF THE GENERAL NOTES AND ALL OF THE PLANS' SPECIFIC NOTES.
2. SITE GRADING MUST BE PERFORMED IN ACCORDANCE WITH THESE PLANS AND SPECIFICATIONS AND THE RECOMMENDATIONS SET FORTH IN THE GEOTECHNICAL REPORT AS REFERENCED IN THIS PLAN SET. IF NO GEOTECHNICAL REPORT HAS BEEN REFERENCED, THE CONTRACTOR MUST HAVE A GEOTECHNICAL ENGINEER PROVIDE WRITTEN SPECIFICATIONS AND RECOMMENDATIONS PRIOR TO THE CONTRACTOR COMMENCING THE GRADING WORK. THE CONTRACTOR MUST FOLLOW THE REQUIREMENTS OF ALL MUNICIPAL, COUNTY, STATE, AND FEDERAL LAWS, WHICH HAVE JURISDICTION OVER THIS PROJECT.
3. THE CONTRACTOR IS REQUIRED TO SECURE ALL NECESSARY AND/OR REQUIRED PERMITS AND APPROVALS FOR ALL OFF-SITE MATERIAL SOURCES AND DISPOSAL FACILITIES. THE CONTRACTOR MUST SUPPLY A COPY OF APPROVALS TO THE PROFESSIONAL OF RECORD, BOHLER AND THE OWNER PRIOR TO THE CONTRACTOR COMMENCING ANY WORK.
4. THE CONTRACTOR IS FULLY RESPONSIBLE FOR VERIFYING EXISTING TOPOGRAPHIC INFORMATION AND UTILITY INVERT ELEVATIONS PRIOR TO COMMENCING ANY CONSTRUCTION. SHOULD DISCREPANCIES BETWEEN THE PLANS AND INFORMATION OBTAINED THROUGH FIELD VERIFICATIONS BE IDENTIFIED OR EXIST, THE CONTRACTOR MUST IMMEDIATELY NOTIFY THE PROFESSIONAL OF RECORD AND BOHLER, IN WRITING.
5. THE CONTRACTOR IS RESPONSIBLE FOR REMOVING AND REPLACING ALL UNSUITABLE MATERIALS WITH SUITABLE MATERIALS AS SPECIFIED IN THE GEOTECHNICAL REPORT. THE CONTRACTOR MUST COMPACT ALL EXCAVATED OR FILLED AREAS IN STRICT ACCORDANCE WITH THE GEOTECHNICAL REPORT'S GUIDANCE. MOISTURE CONTENT AT TIME OF PLACEMENT MUST BE SUBMITTED IN A COMPACTION REPORT PREPARED BY A QUALIFIED GEOTECHNICAL ENGINEER, REGISTERED WITH THE STATE WHERE THE WORK IS PERFORMED. THIS REPORT MUST VERIFY THAT ALL FILLED AREAS AND SUBGRADE AREAS WITHIN THE BUILDING PAD AREA AND AREAS TO BE PAVED HAVE BEEN COMPACTED IN ACCORDANCE WITH THESE PLANS, SPECIFICATIONS AND THE RECOMMENDATIONS SET FORTH IN THE GEOTECHNICAL REPORT AND ALL APPLICABLE REQUIREMENTS, RULES, STATUTES, LAWS, ORDINANCES AND CODES WHICH ARE IN EFFECT AND WHICH ARE APPLICABLE TO THE PROJECT. SUBBASE MATERIAL FOR SIDEWALKS, CURB, OR ASPHALT MUST BE FREE OF ORGANICS AND OTHER UNSUITABLE MATERIALS. SHOULD SUBBASE BE DEEMED UNSUITABLE BY OWNER/DEVELOPER, OR OWNER/DEVELOPER'S REPRESENTATIVE, SUBBASE MUST BE REMOVED AND FILLED WITH APPROVED FILL MATERIAL, COMPACTED AS THE GEOTECHNICAL REPORT DIRECTS. EARTHWORK ACTIVITIES INCLUDING, BUT NOT LIMITED TO, EXCAVATION, BACKFILL, AND COMPACTING MUST COMPLY WITH THE RECOMMENDATIONS IN THE GEOTECHNICAL REPORT AND ALL APPLICABLE REQUIREMENTS, RULES, STATUTES, LAWS, ORDINANCES AND CODES. EARTHWORK ACTIVITIES MUST COMPLY WITH THE STANDARD STATE DOT SPECIFICATIONS FOR ROADWAY CONSTRUCTION (LATEST EDITION) AND ANY AMENDMENTS OR REVISIONS THERETO.
6. IN THE EVENT OF A DISCREPANCY(IES) AND/OR A CONFLICT(S) BETWEEN PLANS, OR RELATIVE TO OTHER PLANS, THE GRADING PLAN TAKES PRECEDENCE AND CONTROLS. THE CONTRACTOR MUST IMMEDIATELY NOTIFY THE PROFESSIONAL OF RECORD AND BOHLER, IN WRITING, OF ANY DISCREPANCY(IES) AND/OR CONFLICT(S).
7. THE CONTRACTOR IS RESPONSIBLE TO IMPORT FILL OR EXPORT EXCESS MATERIAL AS NECESSARY TO CONFORM TO THE PROPOSED GRADING, AND TO BACKFILL EXCAVATIONS FOR THE INSTALLATION OF UNDERGROUND IMPROVEMENTS.

ACCESSIBILITY DESIGN GUIDELINES

(Rev. 1/2023)

1. ALL ACCESSIBLE (A.K.A. ADA) COMPONENTS AND ACCESSIBLE ROUTES MUST BE CONSTRUCTED TO MEET, AT A MINIMUM, THE MORE STRINGENT OF: (A) THE REQUIREMENTS OF THE "AMERICANS WITH DISABILITIES ACT" (ADA) CODE (42 U.S.C. § 12101 ET SEQ. AND 42 U.S.C. § 4151 ET SEQ.); AND (B) ANY APPLICABLE LOCAL AND STATE GUIDELINES, AND ANY AND ALL AMENDMENTS TO BOTH, WHICH ARE IN EFFECT WHEN THESE PLANS WERE COMPLETED.
2. THE CONTRACTOR MUST REVIEW ALL DOCUMENTS REFERENCED IN THESE NOTES FOR ACCURACY, COMPLIANCE AND CONSISTENCY WITH INDUSTRY GUIDELINES.
3. THE CONTRACTOR MUST EXERCISE APPROPRIATE CARE AND PRECISION IN CONSTRUCTION OF ACCESSIBLE (ADA) COMPONENTS AND ACCESSIBLE ROUTES FOR THE SITE. FINISHED SURFACES ALONG THE ACCESSIBLE ROUTE OF TRAVEL FROM PARKING SPACES, PUBLIC TRANSPORTATION, PEDESTRIAN ACCESS, AND INTER-BUILDING ACCESS, TO POINTS OF ACCESSIBLE BUILDING ENTRANCE/EXIT, MUST COMPLY WITH THE ACCESSIBLE GUIDELINES AND REQUIREMENTS WHICH INCLUDE, BUT ARE NOT LIMITED TO THE FOLLOWING:
   A. ACCESSIBLE PARKING SPACES AND ACCESS AISLES SLOPES MUST NOT EXCEED 1:50 (2.0%) IN ANY DIRECTION.
   B. PATH OF TRAVEL ALONG ACCESSIBLE ROUTE MUST PROVIDE A 36-INCHES MINIMUM WIDTH (48-INCHES PREFERRED), OR AS SPECIFIED BY THE GOVERNING AGENCY. UNOBSTRUCTED WIDTH OF TRAVEL (CAR OVERHANGS AND/OR HANDRAILS) MUST NOT REDUCE THIS MINIMUM WIDTH. THE SLOPE MUST NOT EXCEED 1:20 (5.0%) IN THE DIRECTION OF TRAVEL AND MUST NOT EXCEED 1:50 (2.0%) IN CROSS SLOPE. WHERE ACCESSIBLE PATH OF TRAVEL IS GREATER THAN 1:20 (5.0%), AN ACCESSIBLE RAMP MUST BE PROVIDED. ALONG THE ACCESSIBLE PATH OF TRAVEL, OPENINGS MUST NOT EXCEED 1/2-INCH IN WIDTH. VERTICAL CHANGES OF UP TO 1/2-INCH ARE PERMITTED ONLY IF THEY INCLUDES A 1/4-INCH BEVEL AT A SLOPE NOT STEEPER THAN 1:2. NO VERTICAL CHANGES OVER 1/4-INCH ARE PERMITTED.
   C. ACCESSIBLE RAMPS MUST NOT EXCEED A SLOPE OF 1:12 (8.3%) AND A RISE OF 30-INCHES. LEVEL LANDINGS MUST BE PROVIDED AT EACH END OF ACCESSIBLE RAMPS. LANDING MUST PROVIDE POSITIVE DRAINAGE AWAY FROM STRUCTURES, AND MUST NOT EXCEED 1:50 (2.0%) SLOPE IN ANY DIRECTION. RAMPS THAT CHANGE DIRECTION BETWEEN RUNS AT LANDINGS MUST HAVE A CLEAR LANDING OF A MINIMUM OF 60-INCHES BY 60-INCHES. HAND RAILS ON BOTH SIDES OF THE RAMP MUST BE PROVIDED ON AN ACCESSIBLE RAMP WITH A RISE GREATER THAN 6-INCHES.
   D. ACCESSIBLE CURB RAMPS MUST NOT EXCEED A SLOPE OF 1:12 (8.3%). WHERE FLARED SIDES ARE PROVIDED, THEY MUST NOT EXCEED 1:10 (10%) SLOPE. LEVEL LANDING MUST BE PROVIDED AT RAMPS TOP AT A MINIMUM OF 36-INCHES LONG (48-INCHES PREFERRED). IN ALTERATIONS, WHEN THERE IS NO LANDING AT THE TOP, FLARE SIDES SLOPES MUST NOT EXCEED A SLOPE OF 1:12 (8.3%).
   E. DOORWAY LANDINGS AREAS MUST BE PROVIDED ON THE EXTERIOR SIDE OF ANY DOOR LEADING TO AN ACCESSIBLE PATH OF TRAVEL. THIS LANDING MUST BE SLOPED AWAY FROM THE DOOR NO MORE THAN 1:50 (2.0%) FOR POSITIVE DRAINAGE. THIS LANDING AREA MUST BE NO FEWER THAN 60-INCHES (5 FEET) LONG, EXCEPT WHERE OTHERWISE CLEARLY PERMITTED BY ACCESSIBLE STANDARDS FOR ALTERNATIVE DOORWAY OPENING CONDITIONS. (SEE ICC/ANSI A117.1-2009 AND OTHER REFERENCES INCORPORATED BY CODE).
   F. WHEN THE PROPOSED CONSTRUCTION INVOLVES RECONSTRUCTION, MODIFICATION, REVISION OR EXTENSION OF OR TO ACCESSIBLE COMPONENTS FROM EXISTING DOORWAYS OR SURFACES, THE CONTRACTOR MUST VERIFY ALL EXISTING ELEVATIONS SHOWN ON THE PLAN. NOTE THAT TABLE 405.2 OF THE DEPARTMENT OF JUSTICE'S ADA STANDARDS FOR ACCESSIBLE DESIGN ALLOWS FOR STEEPER RAMP SLOPES, IN RARE CIRCUMSTANCES. THE CONTRACTOR MUST IMMEDIATELY NOTIFY THE PROFESSIONAL OF RECORD AND BOHLER, IN WRITING, OF ANY DISCREPANCIES AND/OR FIELD CONDITIONS THAT DIFFER IN ANY WAY OR IN ANY RESPECT FROM WHAT IS SHOWN ON THE PLANS BEFORE COMMENCING ANY WORK. CONSTRUCTED IMPROVEMENTS MUST FALL WITHIN THE MAXIMUM AND MINIMUM LIMITATIONS IMPOSED BY THE BARRIER FREE REGULATIONS AND THE ACCESSIBLE GUIDELINES.
   G. THE CONTRACTOR MUST VERIFY ALL OF THE SLOPES OF THE CONTRACTOR'S FORMS PRIOR TO POURING CONCRETE. IF ANY NON-CONFORMANCE EXISTS OR IS OBSERVED OR DISCOVERED, THE CONTRACTOR MUST IMMEDIATELY NOTIFY THE PROFESSIONAL OF RECORD AND BOHLER, IN WRITING, PRIOR TO POURING CONCRETE. THE CONTRACTOR IS SOLELY RESPONSIBLE FOR ALL COSTS TO REMOVE, REPAIR AND/OR REPLACE NON-CONFORMING CONCRETE AND/OR PAVEMENT SURFACES.
4. IT IS STRONGLY RECOMMENDED THAT THE CONTRACTOR REVIEW THE INTENDED CONSTRUCTION TO ENSURE SAME IS CONSISTENT WITH THE LOCAL BUILDING CODE PRIOR TO COMMENCING CONSTRUCTION.

DRAINAGE AND UTILITY NOTES

(Rev. 3/2023)

1. THE GENERAL NOTES MUST BE INCLUDED AS PART OF THIS ENTIRE DOCUMENT PACKAGE AND ARE PART OF THE CONTRACT DOCUMENTS. THE GENERAL NOTES ARE REFERENCED HEREIN, AND THE CONTRACTOR MUST REFER TO THEM AND FULLY COMPLY WITH THESE NOTES, IN THEIR ENTIRETY. THE CONTRACTOR MUST BE FAMILIAR WITH AND ACKNOWLEDGE FAMILIARITY WITH ALL OF THE GENERAL NOTES AND ALL OF THE PLANS' SPECIFIC NOTES.
2. LOCATIONS OF ALL EXISTING AND PROPOSED SERVICES ARE APPROXIMATE, AND THE CONTRACTOR MUST INDEPENDENTLY VERIFY AND CONFIRM THOSE LOCATIONS AND SERVICES WITH LOCAL UTILITY COMPANIES PRIOR TO COMMENCING ANY CONSTRUCTION OR EXCAVATION. THE CONTRACTOR MUST INDEPENDENTLY VERIFY AND CONFIRM ALL SANITARY CONNECTION POINTS AND ALL OTHER UTILITY SERVICE CONNECTION POINTS IN THE FIELD, PRIOR TO COMMENCING ANY CONSTRUCTION. THE CONTRACTOR MUST REPORT ALL DISCREPANCIES, ERRORS AND OMISSIONS IN WRITING, TO THE PROFESSIONAL OF RECORD AND BOHLER.
3. THE CONTRACTOR MUST VERTICALLY AND HORIZONTALLY LOCATE ALL UTILITIES AND SERVICES INCLUDING, BUT NOT LIMITED TO, GAS, WATER, ELECTRIC, SANITARY AND STORM, TELEPHONE, CABLE, FIBER OPTIC CABLE, ETC. WITHIN THE LIMITS OF DISTURBANCE OR WORK SPACE, WHICHEVER IS GREATER. THE CONTRACTOR MUST USE, REFER TO, AND COMPLY WITH THE REQUIREMENTS OF THE APPLICABLE UTILITY NOTIFICATION SYSTEM TO LOCATE ALL OF THE UNDERGROUND UTILITIES. THE CONTRACTOR IS RESPONSIBLE FOR REPAIRING ALL DAMAGE TO ANY EXISTING UTILITIES WHICH OCCUR DURING CONSTRUCTION, AT NO COST TO THE OWNER AND AT CONTRACTOR'S SOLE COST AND EXPENSE. THE CONTRACTOR MUST BEAR ALL COSTS ASSOCIATED WITH DAMAGE TO ANY EXISTING UTILITIES WHICH OCCURS DURING CONSTRUCTION.
4. THE CONTRACTOR MUST FIELD VERIFY THE PROPOSED INTERFACE POINTS (CROSSINGS) WITH EXISTING UNDERGROUND UTILITIES BY USING A TEST PIT TO CONFIRM EXACT DEPTH, PRIOR TO COMMENCEMENT OF CONSTRUCTION.
5. STORMWATER ROOF DRAIN LOCATIONS ARE BASED ON ARCHITECTURAL PLANS. THE CONTRACTOR IS RESPONSIBLE FOR VERIFYING LOCATIONS, SIZE, AND MATERIAL OF SAME BASED UPON FINAL ARCHITECTURAL PLANS.
6. THE CONTRACTOR IS RESPONSIBLE FOR COORDINATING SITE PLAN DOCUMENTS AND ARCHITECTURAL PLANS FOR EXACT BUILDING UTILITY CONNECTION LOCATIONS; GREASE TRAP REQUIREMENTS; AND DETAILS, DOOR ACCESS, AND EXTERIOR GRADING. THE ARCHITECT WILL DETERMINE THE UTILITY SERVICE SIZES. THE CONTRACTOR MUST COORDINATE INSTALLATION OF UTILITY SERVICES WITH THE INDIVIDUAL COMPANIES TO AVOID CONFLICTS AND TO ENSURE THAT PROPER DEPTHS ARE ACHIEVED. THE CONTRACTOR IS RESPONSIBLE FOR ENSURING THAT INSTALLATION OF ALL IMPROVEMENTS COMPLIES WITH ALL UTILITY REQUIREMENTS OF THE APPLICABLE JURISDICTION AND REGULATORY AGENCIES AND ALL OTHER APPLICABLE REQUIREMENTS, RULES, STATUTES, LAWS, ORDINANCES AND CODES AND, FURTHER, IS RESPONSIBLE FOR COORDINATING THE UTILITY TIE-INS/CONNECTIONS PRIOR TO CONNECTING TO THE EXISTING UTILITY/SERVICE. WHERE A CONFLICT(S) EXISTS BETWEEN THESE DOCUMENTS AND THE ARCHITECTURAL PLANS, OR WHERE ARCHITECTURAL PLAN UTILITY CONNECTION POINTS DIFFER, THE CONTRACTOR MUST IMMEDIATELY NOTIFY THE PROFESSIONAL OF RECORD AND BOHLER, IN WRITING, PRIOR TO CONSTRUCTION, MUST RESOLVE SAME.
7. ALL FILL, COMPACTION, AND BACKFILL MATERIALS REQUIRED FOR UTILITY INSTALLATION MUST BE EXACTLY AS PER THE RECOMMENDATIONS PROVIDED IN THE GEOTECHNICAL REPORT AND THE CONTRACTOR MUST COORDINATE SAME WITH THE APPLICABLE UTILITY COMPANY SPECIFICATIONS. WHEN THE PROJECT DOES NOT HAVE GEOTECHNICAL RECOMMENDATIONS, FILL AND COMPACTION MUST COMPLY WITH APPLICABLE REQUIREMENTS AND SPECIFICATIONS. THE PROFESSIONAL OF RECORD AND BOHLER ARE NOT RESPONSIBLE FOR DESIGN OF TRENCH BACKFILL OR FOR COMPACTION REQUIREMENTS
8. DURING THE INSTALLATION OF SANITARY, STORM, AND ALL UTILITIES, THE CONTRACTOR MUST MAINTAIN A CONTEMPORANEOUS AND THOROUGH RECORD OF CONSTRUCTION TO IDENTIFY THE AS-INSTALLED LOCATIONS OF ALL UNDERGROUND INFRASTRUCTURE. THE CONTRACTOR MUST CAREFULLY NOTE ANY INSTALLATIONS THAT DEVIATE, IN ANY RESPECT, FROM THE INFORMATION CONTAINED IN THESE PLANS. THIS RECORD MUST BE KEPT ON A CLEAN COPY OF THE APPROPRIATE PLAN(S), WHICH THE CONTRACTOR MUST PROMPTLY PROVIDE TO THE OWNER IMMEDIATELY UPON THE COMPLETION OF WORK.
9. THE CONTRACTOR MUST ENSURE THAT ALL UTILITY TRENCHES LOCATED IN EXISTING PAVED ROADWAYS INCLUDING SANITARY, WATER AND STORM SYSTEMS, ARE REPAIRED IN ACCORDANCE WITH REFERENCED MUNICIPAL, COUNTY AND OR STATE DOT DETAILS AS APPLICABLE. THE CONTRACTOR MUST COORDINATE INSPECTION AND APPROVAL OF COMPLETED WORK WITH THE AGENCY WITH JURISDICTION OVER SAME.
10. FINAL LOCATIONS OF PROPOSED UTILITY POLES, AND/ OR POLES TO BE RELOCATED ARE AT THE SOLE DISCRETION OF THE RESPECTIVE UTILITY COMPANY, REGARDLESS OF WHAT THIS PLAN DEPICTS.
11. WATER SERVICE MATERIALS, BURIAL DEPTH, AND COVER REQUIREMENTS MUST BE SPECIFIED BY THE LOCAL UTILITY COMPANY. THE CONTRACTOR MUST CONTACT THE APPLICABLE MUNICIPALITY TO CONFIRM THE PROPER WATER METER AND VAULT, PRIOR TO COMMENCING CONSTRUCTION.
12. THE TOPS OF EXISTING MANHOLES, INLET STRUCTURES, AND SANITARY CLEANOUT MUST BE ADJUSTED, AS NECESSARY, TO MATCH PROPOSED FINISHED GRADES WITH NO TRIPPING OR SAFETY HAZARD IN ACCORDANCE WITH ALL APPLICABLE STANDARDS, REQUIREMENTS, RULES, STATUTES, LAWS, ORDINANCES AND CODES.

OUTSIDE SOURCE NOTES

(Rev. 11/2023)

ANY INFORMATION, DRAWINGS, DATA, PLANS, SPECIFICATIONS, MATERIALS, FIGURES, DOCUMENTATION, REPORTS, AND THE LIKE WHICH IS INDICATED TO HAVE BEEN PREPARED "BY OTHERS" (HEREIN, "BY OTHERS REPORTS, DOCUMENTS AND DETAILS") HAS BEEN OR WILL BE CREATED, DEVELOPED, PREPARED, PERFORMED, AND ANALYZED BY AN ENTITY OR PARTY OTHER THAN THE "BOHLER" ENTITY INVOLVED WITH THIS PROJECT. THE "BOHLER" ENTITY IS NOT IN ANY WAY RESPONSIBLE FOR THE BY OTHERS REPORTS, DOCUMENTS AND DETAILS EVEN IF/WHERE INCLUDED IN THE "BOHLER" ENTITY'S PLANS, REPORTS, ETC. SAME HAS BEEN INCLUDED ON THIS PLAN FOR THE CONVENIENCE, ONLY, OF THE PROJECT OWNER, DEVELOPERS, CONTRACTORS AND CONSULTANTS AND IN ORDER TO COORDINATE THE "BOHLER" ENTITY'S DESIGN WITH THAT OF "OTHERS". THE "BOHLER" ENTITY HAS ASSUMED, FOR PURPOSES OF THIS PLAN, THAT THE BY OTHERS REPORTS, DOCUMENTS AND DETAILS ARE CURRENT AND, IF APPLICABLE, PREPARED IN STRICT ACCORDANCE WITH ALL APPLICABLE COUNTY, STATE, FEDERAL AND OTHER STATUTES, LAWS, RULES, REGULATIONS, ORDINANCES AND THE LIKE. THE "BOHLER" ENTITY SPECIFICALLY DISCLAIMS ANY AND ALL LIABILITY AND RESPONSIBILITY FOR BY OTHERS REPORTS, DOCUMENTS AND DETAILS. THE ENTITY OR PERSON WHO CREATED THE INFORMATION CONTAINED IN THE BY OTHERS REPORTS, DOCUMENTS AND DETAILS (EXCLUDING INFORMATION AND/OR DETAILS SOLELY SUPPLIED BY A JURISDICTION AND/OR GOVERNING BODY) AGREES BY PARTICIPATING IN THIS PROJECT, RECEIVING, REVIEWING, USING AND/OR RELYING UPON THIS DOCUMENT, AND/OR BY AGREEING TO THE PROJECT OWNER/DEVELOPER'S CONTRACT DOCUMENTS, TO DEFEND, INDEMNIFY, PROTECT AND HOLD HARMLESS THE "BOHLER" ENTITY THAT PREPARED THIS DOCUMENT AND ITS EMPLOYEES FOR ANY AND ALL DAMAGES, INJURIES, COSTS, EXPENSES AND THE LIKE, TO THE FULLEST EXTENT PERMITTED UNDER THE LAW, WHICH THE "BOHLER" ENTITY AND/OR ITS EMPLOYEES SUFFER OR INCUR AS A RESULT OF INCLUDING ANY BY OTHERS REPORTS, DOCUMENTS AND DETAILS IN AND ON OR IN THIS PLAN. ANYONE OR ANY ENTITY WHO RECEIVED, RELIES UPON AND/OR USES THIS PLAN, AGREES TO HOLD THE "BOHLER" ENTITY AND ITS EMPLOYEES HARMLESS FROM ANY CLAIMS, DAMAGES, INJURIES, COSTS AND EXPENSES, TO THE FULLEST EXTENT PERMITTED UNDER THE LAW, FOR ANY DAMAGES, INJURIES, COSTS, EXPENSES AND THE LIKE, TO THE FULLEST EXTENT PERMITTED UNDER THE LAW, WHICH IT OR THEY SUFFER OR INCUR AS A RESULT OF THE ANY BY OTHERS REPORTS, DOCUMENTS AND DETAILS INCORPORATED IN THE PLAN, AND EXPRESSLY CONFIRMS THAT BY RECEIVING, RELYING UPON AND/OR USING SAME, THE "BOHLER" ENTITY SHALL HAVE NO LIABILITY RELATED TO SAME. WITH RESPECT TO ALL BY OTHERS REPORTS, DOCUMENTS AND DETAILS, CONTRACTOR MUST VERIFY ALL INFORMATION CONTAINED IN THE SCOPE OF ALL PARTIES INVOLVED IN PREPARING THE BY OTHERS REPORTS, DOCUMENTS AND DETAILS PRIOR TO COMMENCING ANY CONSTRUCTION AND MUST VERIFY THAT THE INFORMATION IS THE LATEST, THE MOST RECENT AND THE MOST CURRENT REPORT, DOCUMENT AND DETAIL. REFERENCES ON THIS PLAN TO INFORMATION PREPARED OR CONTAINED IN BY OTHERS REPORTS, DOCUMENTS AND DETAILS DEPICTING AN OFF-SITE AREA WHERE NO DETAIL IS INCLUDED IS A REFERENCE TO AN AREA, DETAIL, SPECIFICATION OR DESIGN THAT HAS NOT BEEN DESIGNED OR CONSTRUCTED BY THE "BOHLER" ENTITY AND REGARDING WHICH THE "BOHLER" ENTITY HAS NO CONTROL OVER OR LIABILITY REGARDING, BUT IS ADDED TO THIS PLAN FOR INFORMATIONAL PURPOSES, ONLY.

STANDARD ABBREVIATIONS

FOR ENTIRE PLAN SET

AASHTO	AMERICAN ASSOCIATION OF STATE HIGHWAY AND TRANSPORTATION OFFICIALS
AC	ACRE / ACRES
AD	AREA DRAIN
ADA	ACCESSIBLE / AMERICANS WITH DISABILITIES ACT
AG	ABOVE GROUND
APPROX	APPROXIMATE
ARCH	ARCHITECTURAL
ASPH	ASPHALT
ASSF	AREA SUBJECT TO STORMWATER FLOWAGE
ASSOC	ASSOCIATION
BC	BOTTOM OF CURB
BF	BASEMENT FLOOR
BIO	BIOGARDEN
BIT	BITUMINOUS
BK	BLOCK
BL	BASELINE
BLDG	BUILDING
BM	BENCH MARK
BRL	BUILDING RESTRICTION LINE
BVW	BORDERING VEGETATIVE WETLAND
CB	CATCH BASIN
CF	CUBIC FEET
CI	CURB INLET
CIT	CHANGE IN TYPE
CL	CENTER LINE
CMP	CORRUGATED METAL PIPE
C/O	CLEAN OUT
CONC	CONCRETE
CONN	CONNECTION
COORD	COORDINATE
CPP	CORRUGATED PLASTIC PIPE
CY	CUBIC YARD
DEC	DECORATIVE
DEP	DEPARTMENT OF ENVIRONMENTAL PROTECTION
DET	DETENTION
DIA	DIAMETER
DMH	DRAINAGE MANHOLE
DOM	DOMESTIC
DOT	DEPARTMENT OF TRANSPORTATION
DP	DESIGN POINT
DWL	DASHED WHITE LINE
DYL	DOUBLE YELLOW LINE
EG	EXISTING GRADE
ELEC	ELECTRIC
ELEV	ELEVATION
EOR	ENGINEER OF RECORD
EP / EOP	EDGE OF PAVEMENT
ES / EOS	EDGE OF SHOULDER
EW	END WALL
EX	EXISTING
FDC	FIRE DEPARTMENT CONNECTION
FEMA	FEDERAL EMERGENCY MANAGEMENT AGENCY
FES	FLARED END SECTION
FF	FINISH / FIRST FLOOR
FFE	FINISH / FIRST FLOOR ELEVATION
FG	FINISH GRADE
FH	FIRE HYDRANT
FM	FORCE MAIN
FO	FIBER OPTIC
G	GRADE
GC	GENERAL CONTRACTOR
GEO	GEOTECH/GEOTECHNICAL
GF / GFE	GARAGE FLOOR ELEVATION (AT DOOR)
GFA	GROSS FLOOR AREA
GH	GRADE HIGH (WALL)
GL	GRADE LOW (WALL)
GRT	GRATE
GT	GREASE TRAP
GV	GATE VALVE
HDPE	HIGH DENSITY POLYETHYLENE
HOR	HORIZONTAL
HP	HIGH POINT
HW	HEADWALL
ICS	INLET CONTROL STRUCTURE
INF	INFILTRATION
INT	INTERSECTION
INV	INVERT
LF	LINEAR FOOT
LOC	LIMIT OF CLEARING
LOD	LIMIT OF DISTURBANCE
LOS	LINE OF SIGHT
LOW	LIMIT OF WORK
LP	LOW POINT
LS	LANDSCAPE
LSA	LANDSCAPE AREA
MAX	MAXIMUM
ME	MATCH EXISTING
MEP	MECHANICAL, ELECTRICAL, AND PLUMBING
MH	MANHOLE
MIN	MINIMUM
MJ	MECHANICAL JOINT
MUTCD	MANUAL ON UNIFORM TRAFFIC CONTROL DEVICES
NOAA	NATIONAL OCEANIC AND ATMOSPHERIC ADMINISTRATION
NRCS	NATIONAL RESOURCE CONSERVATION SERVICE
O&M	OPERATIONS AND MAINTENANCE
OC	ON CENTER
OCS	OUTLET CONTROL STRUCTURE
OGS	OIL AND GRIT SEPARATOR
ORD	ORDINANCE
PA / POA	POINT OF ANALYSIS
PC	POINT OF CURVATURE
PCCR	POINT OF CURVATURE, CURB RETURN
PERF	PERFORATED
PG	PROPOSED GRADE
PI	POINT OF INTERSECTION
POG	POINT OF GRADE
PP	POLYPROPYLENE PIPE
PROP	PROPOSED
PT	POINT OF TANGENCY
PTCR	POINT OF TANGENCY, CURB RETURN
PVI	POINT OF VERTICAL INTERSECTION
PVMT	PAVEMENT
PVT	POINT OF VERTICAL TANGENCY
R	RADIUS / RADII
R/W	RIGHT-OF-WAY / RIGHTS-OF-WAY
RCP	REINFORCED CONCRETE PIPE
RD	ROOF DRAIN
REGS	REGULATIONS
RELO	TO BE RELOCATED
REQ	REQUIRED
RET	RETENTION
RET WALL	RETAINING WALL
RETO	TO BE RETURNED TO OWNER
RG	RAIN GARDEN
S	SLOPE
SAN	SANITARY SEWER
SESC	SOIL EROSION AND SEDIMENT CONTROL
SF	SQUARE FEET
SHLO	STATE HIGHWAY LAYOUT
SMH	SANITARY MANHOLE
STA	STATION
STM	STORM WATER / STORM SEWER
SWL	SINGLE/SOLID WHITE LINE
SWPPP	STORMWATER POLLUTION PREVENTION PLAN
TBA	TO BE ABANDONED
TBR	TO BE REMOVED
TBV	TO BE VACATED
TC	TOP OF CURB
Tc	TIME OF CONCENTRATION
TD	TRENCH DRAIN
TELE	TELECOMMUNICATIONS / TELEDATA
TPF	TREE PROTECTION FENCE
TR	TO REMAIN
TRANS	TRANSITION
TYP	TYPICAL
UG	UNDERGROUND
UP	UTILITY POLE
USGS	UNITED STATES GEOLOGICAL SURVEY
VERT	VERTICAL
VIF	VERIFY IN FIELD
W	WIDE / WIDTH
W/L	WATER LINE
WM	WATER METER
WQU	WATER QUALITY UNIT
YD	YARD DRAIN
#	NUMBER
#:#	SLOPE EXPRESSED IN HORIZONTAL:VERTICAL IN FEET
±	PLUS OR MINUS
°	DEGREE
Ø	DIAMETER
'	FEET/FOOT
"	INCHES

PROP LINE LEGEND

PROPERTY LINE	
RIGHT-OF-WAY LINE	
INTERIOR PROPERTY LINE	
LEASE LINE	
EASEMENT LINE	
SETBACK LINE	
LIMIT OF WORK	LOW
LIMIT OF DISTURBANCE	LOD
SAWCUT LINE	
OVERHEAD WIRE	OH
ELECTRIC LINE	E
TELEPHONE LINE	T
CABLE LINE	C
GAS LINE	G
STORM SEWER	
SANITARY MAIN 12" OR GREATER	
SANITARY MAIN	S
SANITARY LATERAL	SL
SANITARY FORCE MAIN	FM
WATER MAIN 12" OR GREATER	
WATER MAIN	W
WATER LATERAL	WL
WATER FIRE LINE	F

PROP SYMBOL LEGEND

TYPICAL SIGN	
TYPICAL BOLLARD	
UTILITY POLE WITH LIGHT	
UTILITY POLE	
TYPICAL LIGHT	
FIRE HYDRANT	
CLEANOUT	
SANITARY MANHOLE	S
STORM MANHOLE	D
WATER METER	
WATER VALVE	
GAS VALVE	
TEST PIT	T-#
BORING	B-#

BOHLER

SITE CIVIL AND CONSULTING ENGINEERING
LAND SURVEYING
PROGRAM MANAGEMENT
LANDSCAPE ARCHITECTURE
SUSTAINABLE DESIGN
PERMITTING SERVICES
TRANSPORTATION SERVICES

THE INFORMATION, DESIGN AND CONTENT OF THIS PLAN ARE PROPRIETARY AND SHALL NOT BE COPIED OR USED FOR ANY PURPOSE WITHOUT PRIOR WRITTEN AUTHORIZATION FROM BOHLER. ONLY APPROVED, SIGNED AND SEALED PLANS SHALL BE UTILIZED FOR CONSTRUCTION PURPOSES
© BOHLER

REVISIONS

REV	DATE	COMMENT	DRAWN BY / CHECKED BY
0	08/27/26	ISSUED FOR BID	MFR / SEL

TEXAS
YOU MUST CALL 811 BEFORE ANY EXCAVATION WHETHER IT'S ON PRIVATE OR PUBLIC LAND.
1-800-344-8377
www.texas811.org

PRELIMINARY

THIS DRAWING IS INTENDED FOR MUNICIPAL AND/OR AGENCY REVIEW AND APPROVAL. IT IS NOT INTENDED AS A CONSTRUCTION DOCUMENT UNLESS INDICATED OTHERWISE.

PROJECT No.:	TXA260019.00-0A
DRAWN BY:	FR
CHECKED BY:	MJH
DATE:	06/05/2026
CAD I.D.:	P-CIVL-CNDS

PROJECT:

CONSTRUCTION DOCUMENTS

FOR

PROPOSED
MINOR AUTOMOTIVE REPAIR

SW CORNER OF US 380 & FM 720
CROSS ROADS, TX 76227
LOT 11R, BLOCK A

BOHLER
2600 NETWORK BLVD., SUITE 310
FRISCO, TX 75034
Phone: (469) 458-7300
TX@BohlerEng.com
TBPE NO. 18065 | TBPLS NO. 10194413

PLANS PREPARED BY
BOHLER
FOR REVIEW PURPOSES ONLY
MATHIAS J. HAUBERT
LICENSE NUMBER: 138306

SHEET TITLE:

GENERAL NOTES

SHEET NUMBER:

C-102

ORG. DATE - 06/30/2026

Aug 25, 2026
P:\TX\2026\TXA260019.00\CAD\DRAWINGS\PLAN SETS\CIVIL SITE PLANS\P-CIVL-CNDS-TXA260019.00-0A----->LAYOUT: C-102 GENERAL NOTES
MR

SOIL EROSION & SEDIMENT CONTROL PLAN NOTES

(Rev. 12/2024)

1. EROSION CONTROL MEASURES MUST CONFORM TO THE TEXAS GUIDELINES FOR EROSION AND SEDIMENT CONTROL UNLESS OTHERWISE NOTED, OR UNLESS ENGINEER CLEARLY AND SPECIFICALLY, IN WRITING, DIRECTS OTHERWISE. INSTALLATION OF EROSION CONTROL, CLEARING, AND SITE WORK MUST BE PERFORMED EXACTLY AS INDICATED IN THE EROSION CONTROL CONSTRUCTION NOTES.
2. THE FOLLOWING EROSION CONTROL MEASURES ARE PROPOSED FOR THIS SITE:
   a. STABILIZE CONSTRUCTION ENTRANCE/ EXIT - A TEMPORARY STONE CONSTRUCTION ACCESS IS TO BE INSTALLED AT THE DESIGNATED LOCATION AS SHOWN ON THE PLAN. THIS AREA MUST BE GRADED SO THAT RUNOFF WATER WILL BE RETAINED ON-SITE.
   b. SILT FENCE - INSTALL SILT FENCE(S) AND/OR SILT SOCK(S) AROUND ALL OF THE DOWNSLOPE PERIMETERS OF THE SITE, TEMPORARY FILL AREAS, AND SOIL STOCKPILES.
   c. INLET PROTECTION - IN ORDER TO REDUCE THE POTENTIAL FOR SEDIMENT TO ENTER THE STORMWATER SYSTEM, THE CONTRACTOR SHALL INSTALL INLET PROTECTION AROUND EACH INLET AS DRAINAGE STRUCTURES ARE INSTALLED. INSTALL TEMPORARY INLET PROTECTION ON INLETS DOWNSLOPE FROM DISTURBANCE, WHICH MAY BE BEYOND THE LIMITS OF DISTURBED AREA.
   d. TREE PROTECTION FENCE – THROUGH THE USE OF TREE PROTECTION FENCE, THE CONTRACTOR MUST MARK ALL EXISTING TREES AND SHRUBS WITHIN AND AROUND THE WORK AREA THAT ARE TO REMAIN. THE CONTRACTOR SHALL REFER TO THE TREE PROTECTION FENCE DETAILS HEREIN.
   e. SOIL STOCKPILES – STOCKPILES SHALL BE LIMITED TO 35' MAX. HEIGHT AND SHOULD BE REMOVED OR UTILIZED FOR SITE CONSTRUCTION AS SOON AS PRACTICABLE.
   f. DUST CONTROL –SHOULD EXCESSIVE DUST BE GENERATED, THE CONTRACTOR MUST PROMPTLY USE AND APPLY WATER TO BARE SOIL SURFACES TO ELIMINATE, OR IF NOT POSSIBLE, MINIMIZE, BLOWING DUST.
   g. DEWATERING – THE CONTRACTOR MUST PERFORM DEWATERING IN ACCORDANCE WITH STATE AND LOCAL REGULATIONS AND APPROVED PERMITS. IT IS THE CONTRACTOR'S RESPONSIBILITY TO OBTAIN AND PAY THE COSTS ASSOCIATED WITH ANY AND ALL NECESSARY DISCHARGE PERMITS ASSOCIATED WITH SAME.
   h. CONSTRUCTION WASTE MATERIAL STORAGE – THE CONTRACTOR MUST LOCATE CONSTRUCTION WASTE MATERIAL STORAGE AREAS TO MINIMIZE EXPOSURE TO STORMWATER. CONTRACTOR MUST IMMEDIATELY PLACE CONSTRUCTION WASTE IN ON-SITE STORAGE CONTAINERS UNTIL THAT CONSTRUCTION WASTE IS READY FOR OFF-SITE DISPOSAL. CONTRACTOR MUST MAINTAIN SPILL PREVENTION & RESPONSE EQUIPMENT AND MAKE SAME CONTINUOUSLY AVAILABLE ON-SITE FOR USE BY CONTRACTOR'S EMPLOYEES WHO MUST BE PROPERLY TRAINED IN THE APPLICATION OF SPILL PREVENTION & RESPONSE PROCEDURES.
3. THE CONTRACTOR MUST INSPECT EROSION CONTROL MEASURES WEEKLY. CONTRACTOR MUST IMMEDIATELY CLEAR ANY SILT GREATER THAN 6" BEHIND THE FILTER FABRIC AND/OR SILT SOCK BARRIERS AND EXCAVATE AND REMOVE ANY SILT FROM DROP INLET PROTECTION.
4. THE TERM 'PERMANENT STABILIZATION' USED THROUGHOUT THIS SEQUENCE IS MEANT TO DESCRIBE THE PROPER PLACING, GRADING, CONSTRUCTING, REINFORCING, LINING, AND COVERING OF SOIL, ROCK, OR EARTH TO ENSURE THEIR PERMANENT RESISTANCE TO EROSION, SLIDING OR OTHER MOVEMENT. FOR AN EARTH DISTURBANCE TO BE PERMANENTLY STABILIZED, THE DISTURBED AREA SHALL BE COVERED WITH ONE OF THE FOLLOWING: A MINIMUM UNIFORM 70% PERENNIAL VEGETATIVE COVER, WITH A DENSITY CAPABLE OF RESISTING ACCELERATED EROSION AND SEDIMENTATION; OR AN ACCEPTABLE BMP THAT PERMANENTLY MINIMIZES ACCELERATED EROSION AND SEDIMENTATION.
5. BEFORE INITIATING ANY REVISION TO THE APPROVED EROSION AND SEDIMENT CONTROL PLAN OR REVISIONS TO OTHER PLANS WHICH MAY AFFECT THE EFFECTIVENESS OF THE APPROVED E&S CONTROL PLAN, THE OPERATOR MUST RECEIVE APPROVAL OF THE REVISIONS FROM THE CONSERVATION DISTRICT. THE OPERATOR SHALL ASSURE THAT THE APPROVED EROSION AND SEDIMENT CONTROL PLAN IS PROPERLY AND COMPLETELY IMPLEMENTED. IMMEDIATELY UPON DISCOVERING UNFORESEEN CIRCUMSTANCES POSING THE POTENTIAL FOR ACCELERATED EROSION AND/OR SEDIMENT POLLUTION, THE OPERATOR SHALL IMPLEMENT APPROPRIATE BEST MANAGEMENT PRACTICES TO ELIMINATE POTENTIAL FOR ACCELERATED EROSION AND/OR SEDIMENT POLLUTION.
6. THE CONTRACTOR MUST APPLY TEMPORARY SEED AND MULCH TO ALL DISTURBED AREAS THAT WILL NOT BE BROUGHT TO FINISHED GRADE AND VEGETATED WITHIN 7 DAYS. WHEN AREAS ARE DISTURBED AFTER THE GROWING SEASON, THE CONTRACTOR MUST STABILIZE SAME WITH GEOTEXTILE FABRIC AND MAINTAIN SAME IN STRICT ACCORDANCE WITH BEST MANAGEMENT PRACTICES.
7. AS SOON AS SLOPES, CHANNELS, DITCHES, AND OTHER DISTURBED AREAS REACH FINAL GRADE, THEY MUST BE STABILIZED. WHEN FINAL GRADE IS ACHIEVED DURING NON-GERMINATING MONTHS, THE AREA SHOULD BE MULCHED UNTIL THE BEGINNING OF THE NEXT PLANTING SEASON. AS DISTURBED AREAS WITHIN A PROJECT APPROACH FINAL GRADE, PREPARATIONS SHOULD BE MADE FOR SEEDING AND MULCHING TO BEGIN (I.E., ANTICIPATE THE COMPLETION DATE AND SCHEDULE THE SEEDER). IN NO CASE SHOULD AN AREA EXCEEDING 15,000 SQUARE FEET, WHICH IS TO BE STABILIZED BY VEGETATION, REACH FINAL GRADE WITHOUT BEING SEEDED AND MULCHED. WAITING UNTIL EARTHMOVING IS COMPLETED BEFORE MAKING PREPARATIONS FOR SEEDING AND MULCHING IS NOT ACCEPTABLE. SEEDING AND MULCHING REQUIREMENTS ARE SPECIFIED HEREIN.
8. ONCE AREAS HAVE REACHED PERMANENT STABILIZATION AND PRIOR TO DEMOBILIZATION, THE CONTRACTOR MUST REMOVE ALL TEMPORARY EROSION CONTROL MEASURES, AND ANY ACCUMULATED SILT OR DEBRIS.
9. THE CONTRACTOR MUST CLEAN EXISTING AND PROPOSED DRAINAGE STRUCTURES AND INTERCONNECTING PIPES ON OR OFF-SITE AS THE JURISDICTIONAL AGENCY REQUIRES, BOTH AT THE TIME OF SITE STABILIZATION AND AT END OF PROJECT.
10. A SITE CONSTRUCTION SEQUENCE IS PROVIDED AS A GUIDE FOR THE CONTRACTOR DURING CONSTRUCTION. PRIOR TO THE START OF CONSTRUCTION, CONTRACTOR MUST REVIEW THE SEQUENCE, AND ANY REQUESTED CHANGES AND THOSE REQUESTED CHANGES MUST BE REVIEWED AND APPROVED BY THE JURISDICTIONAL AGENCY.
11. THE GENERAL NOTES MUST BE INCLUDED AS PART OF THIS ENTIRE DOCUMENT PACKAGE AND ARE PART OF THE CONTRACT DOCUMENTS. THE GENERAL NOTES ARE REFERENCED HEREIN AND CONTRACTOR MUST REFER TO THEM. THE CONTRACTOR MUST BE FAMILIAR WITH AND ACKNOWLEDGE FAMILIARITY WITH ALL OF THE GENERAL NOTES AND ALL OF THE PLANS' SPECIFIC NOTES.
12. INSTALLATION OF EROSION CONTROL DEVICES MUST BE IN ACCORDANCE WITH ALL OF THE MANUFACTURER'S RECOMMENDATIONS.
13. CONTRACTOR MUST INSTALL ADDITIONAL EROSION CONTROL MEASURES IF ENGINEER OR JURISDICTIONAL AGENCY SO REQUIRES, TO PREVENT THE DISCHARGE OF SEDIMENT LADEN RUNOFF FROM EXITING THE SITE.
14. THE CONTRACTOR IS RESPONSIBLE FOR INSPECTING AND MAINTAINING ALL EROSION CONTROL MEASURES ON THE SITE UNTIL PERMANENT STABILIZATION IS ESTABLISHED UNLESS INDICATED OTHERWISE IN LOCAL, STATE AND/OR FEDERAL PROJECT APPROVALS. THE COST OF INSTALLING AND MAINTAINING THE EROSION CONTROL MEASURES MUST BE INCLUDED IN THE BID PRICE FOR THE SITE WORK AND THE CONTRACTOR IS RESPONSIBLE FOR ALL SUCH COSTS.

Aug 25, 2026
P:\TX\026\TXA260019.00\CAD\DRAWINGS\PLAN SETS\CIVIL SITE PLANS\P-CIVL-CNDS-TXA260019.00-0A----LAYOUT: C-103 GENERAL NOTES
MR

BOHLER™

SITE CIVIL AND CONSULTING ENGINEERING
LAND SURVEYING
PROGRAM MANAGEMENT
LANDSCAPE ARCHITECTURE
SUSTAINABILITY DESIGN
PERMITTING SERVICES
TRANSPORTATION SERVICES

THE INFORMATION, DESIGN AND CONTENT OF THIS PLAN ARE PROPRIETARY AND SHALL NOT BE COPIED OR USED FOR ANY PURPOSE, WITHOUT PRIOR WRITTEN AUTHORIZATION FROM BOHLER. ONLY APPROVED, SIGNED AND SEALED PLANS SHALL BE UTILIZED FOR CONSTRUCTION PURPOSES
© BOHLER

REVISIONS

REV	DATE	COMMENT	DRAWN BY / CHECKED BY
0	08/27/26	ISSUED FOR BID	MFR / SEL

TEXAS
YOU MUST CALL 811 BEFORE ANY EXCAVATION
WHETHER IT'S ON PRIVATE OR PUBLIC LAND.
1-800-344-8377
www.texas811.org

PRELIMINARY

THIS DRAWING IS INTENDED FOR MUNICIPAL AND/OR AGENCY REVIEW AND APPROVAL. IT IS NOT INTENDED AS A CONSTRUCTION DOCUMENT UNLESS INDICATED OTHERWISE.

PROJECT No.: TXA260019.00-0A
DRAWN BY: FR
CHECKED BY: MJH
DATE: 06/05/2026
CAD I.D.: P-CIVL-CNDS

PROJECT:

CONSTRUCTION DOCUMENTS

FOR

PROPOSED
MINOR AUTOMOTIVE REPAIR

SW CORNER OF US 380 & FM 720
CROSS ROADS, TX 76227
LOT 11R, BLOCK A

BOHLER™
2600 NETWORK BLVD., SUITE 310
FRISCO, TX 75034
Phone: (469) 458-7300
TX@BohlerEng.com
TBPE NO. 18065 | TBPLS NO. 10194413

PLANS PREPARED BY
BOHLER
FOR REVIEW PURPOSES ONLY
MATHIAS J. HAUBERT
LICENSE NUMBER: 138306

SHEET TITLE:

GENERAL NOTES

SHEET NUMBER:

C-103

ORG. DATE - 06/30/2026

GENERAL NOTES

1. ACCORDING TO MAP NO. 48121C0405G, DATED EFFECTIVE 04/18/2011 OF THE FEDERAL EMERGENCY MANAGEMENT AGENCY, NATIONAL FLOOD INSURANCE PROGRAM MAP, THIS PROPERTY IS WITHIN FLOOD ZONE X, (AREAS DETERMINED TO BE OUTSIDE THE 0.2% ANNUAL CHANCE FLOODPLAIN), WHICH IS NOT A SPECIAL FLOOD HAZARD AREA. THIS FLOOD STATEMENT DOES NOT IMPLY THAT THE PROPERTY AND/OR THE STRUCTURES THEREON WILL BE FREE FROM FLOODING OR FLOOD DAMAGE. ON RARE OCCASIONS, GREATER FLOODS CAN AND WILL OCCUR AND FLOOD HEIGHTS MAY BE INCREASED BY MAN-MADE OR NATURAL CAUSES. THIS STATEMENT SHALL NOT CREATE LIABILITY ON THE PART OF THE SURVEYOR.
2. THE BASIS OF BEARING IS DERIVED FROM THE TRIMBLE CENTERPOINT RTX SERVICE - TEXAS STATE PLANE COORDINATE SYSTEM, NORTH CENTRAL ZONE (4202), NAD83. ELEVATIONS ARE DERIVED FROM NORTH AMERICAN VERTICAL DATUM (NAVD) 88 USING GEIOD 18.
3. THE SURVEYOR WAS NOT PROVIDED WITH ZONING INFORMATION IN ACCORDANCE TO TABLE A ITEM 6(a) AND / OR TABLE A ITEM 6(b).
4. NO ON-SITE PARKING STRIPING WAS IDENTIFIED AT TIME OF SURVEY.
5. LOCATION OF ALL UNDERGROUND UTILITIES ARE APPROXIMATE, SOURCE INFORMATION FROM PLANS AND MARKINGS HAS BEEN COMBINED WITH OBSERVED EVIDENCE OF UTILITIES TO DEVELOP A VIEW OF THOSE UNDERGROUND UTILITIES. HOWEVER, LACKING EXCAVATION, THE EXACT LOCATION OF UNDERGROUND FEATURES CANNOT BE ACCURATELY, COMPLETELY AND RELIABLY DEPICTED. WHERE ADDITIONAL OR MORE DETAILED INFORMATION IS REQUIRED, THE CLIENT IS ADVISED THAT EXCAVATION MAY BE NECESSARY.
6. THERE IS NO RECENT EVIDENCE OF EARTH MOVING WORK, BUILDING CONSTRUCTION, AND/OR BUILDING ADDITIONS OBSERVED IN THE PROCESS OF CONDUCTING THE FIELDWORK.
7. THIS MAP IS INTENDED TO BE DEPICTED AT A SCALE OF 1" = 20' ON 24" X 36" SHEETS. UNITS SHOWN ARE U.S. FEET.
8. ALL DISTANCES ARE MEASURED GROUND DISTANCES UNLESS NOTED OTHERWISE.
9. THE PROPERTY HAS DIRECT ACCESS TO FARM MARKET ROAD NO. 720 WEST, A VARIABLE WIDTH PUBLIC RIGHT-OF-WAY ALONG THE SOUTH BOUNDARY.
10. RIGHT-OF-WAY LINES SHOWN ON THIS SURVEY THAT ARE NOT ACTUAL BOUNDARIES OF THE SUBJECT TRACT(S) ARE DEPICTED GRAPHICALLY AND ARE SHOWN APPROXIMATELY FOR INFORMATIONAL PURPOSES ONLY. SAID RIGHT-OF-WAY LINES SHOULD NOT BE UTILIZED FOR DESIGN PURPOSES.
11. THERE ARE NO GAPS, GORES, OVERLAPS, OR HIATUSES BETWEEN THE SUBJECT PROPERTY AND ADJACENT PROPERTY AND RIGHT-OF-WAY LINES.
12. THIS SURVEY FORMS A MATHEMATICALLY CLOSED FIGURE AND THE PROPERTY IS CONTIGUOUS WITH ADJACENT PROPERTIES AND RIGHTS OF WAY WITHOUT ANY GAPS, GORES OR OVERLAPS.
13. NO SURVEY OF SUBTERRANEAN STRUCTURES OR INTERIOR SPACES SUCH AS FOOTINGS, FOUNDATIONS, VAULTS OR BASEMENTS WAS PERFORMED AS PART OF THIS LAND SURVEY, AND THIS PLAN SHOULD NOT BE CONSTRUED AS CERTIFICATION TO THE EXISTENCE OR LOCATION OF THE SAME.
14. SOME TOPOGRAPHIC FEATURES MAY BE EXAGGERATED IN SCALE FOR CLARITY. THE CENTER OF THE SYMBOL OF SUCH FEATURES IS THE CORRECT LOCATION.
15. THE CONTOURS SHOWN ON THIS SURVEY ARE AT A 1-FOOT INTERVAL AND THE UNDERLYING DATA WAS COLLECTED WITH CONVENTIONAL FIELD SURVEY METHODS.
16. THERE ARE NO VISIBLE ENCROACHMENTS EXCEPT AS SHOWN ON THE SURVEY AND LISTED BELOW. ENCROACHMENT IS A LEGAL CONDITION, NOT A MATTER OF SURVEY AND, AS A RESULT, THERE MAY BE OTHER POSSIBLE ENCROACHMENTS AFFECTING THE PROPERTY THAT ARE NOT SHOWN.
17. ADDITIONS OR DELETIONS TO SURVEY MAPS OR REPORTS BY ANYONE OTHER THAN THE SIGNING PARTY OR PARTIES IS PROHIBITED WITHOUT WRITTEN CONSENT OF THE SIGNING PARTY OR PARTIES.
18. THIS SURVEY HAS BEEN PREPARED FOR THE SOLE PURPOSE OF THE TRANSACTION DESCRIBED IN THE REFERENCED TITLE COMMITMENT AND THE PARTIES LISTED THEREON. THIS SURVEY IS NOT TO BE USED FOR ANY SUBSEQUENT TRANSACTIONS.
19. THERE IS NO OBSERVABLE EVIDENCE OF SITE USED AS A SOLID WASTE DUMP, SUMP, OR SANITARY LANDFILL.
20. THERE WAS NO EVIDENCE OF BURIAL GROUNDS, CEMETERIES, GRAVES, OR GRAVEYARDS OBSERVED IN THE PROCESS OF CONDUCTING THE FIELD WORK.

TITLE DESCRIPTION:

TRACT 1

LOT 11R, BLOCK A, GREENWAY CROSS ROADS ADDITION, AN ADDITION IN DENTON COUNTY, TEXAS, RECORDED UNDER CLERK'S FILE NO. 2025-241, PLAT RECORDS, DENTON COUNTY, TEXAS.

TITLE EXCEPTIONS:

THIS SURVEY IS PREPARED WITH REFERENCE TO A COMMITMENT FOR TITLE INSURANCE PREPARED BY FIDELITY NATIONAL TITLE INSURANCE COMPANY, COMMITMENT NO. 4000412600295 WITH AN EFFECTIVE DATE OF MARCH 26, 2026. CLIENT UNDERSTANDS AND AGREES THAT THE FIRM SHALL NOT BE LIABLE FOR ANY ERRORS OR OMISSIONS IN OR RESULTING FROM THE USE OF THE TITLE DOCUMENTS OR FROM ANY DEFICIENCIES OR ANY INACCURACIES CONTAINED IN SAID TITLE DOCUMENTS. OUR OFFICE HAS REVIEWED THE FOLLOWING SURVEY RELATED EXCEPTIONS IN SCHEDULE B, SECTION 10:

D. THE FOLLOWING ITEMS AS SHOWN ON PLAT RECORDED UNDER CLERK'S FILE NO. 2025-241, PLAT RECORDS, DENTON COUNTY, TEXAS:
TEN FOOT WATER EASEMENT;
TEN FOOT DRAINAGE EASEMENT; **DOES NOT AFFECT**
THIRTY FOOT BUILDING LINE;
THIRTY FOOT FIRE LANE, ACCESS, UTILITY AND DRAINAGE EASEMENT;
TWENTY FOUR FOOT FIRE LANE & ACCESS EASEMENT
DOES AFFECT - AS SHOWN ON SURVEY

E. EASEMENT(S) AND RIGHTS INCIDENTAL THERETO, AS GRANTED IN A DOCUMENT:
GRANTED TO: DENTON COUNTY ELECTRIC COOPERATIVE, INC.
PURPOSE: AS PROVIDED IN SAID DOCUMENT.
RECORDING DATE: DECEMBER 28, 1953
RECORDING NO: VOLUME 403, PAGE 118, DEED RECORDS, DENTON COUNTY, TEXAS.
MAY AFFECT - INDETERMINATE DESCRIPTION

F. EASEMENT(S) AND RIGHTS INCIDENTAL THERETO, AS GRANTED IN A DOCUMENT:
GRANTED TO: MUSTANG SPECIAL UTILITY DISTRICT
PURPOSE: AS PROVIDED IN SAID DOCUMENT.
RECORDING DATE: OCTOBER 2, 2018
RECORDING NO: UNDER CLERK'S FILE NO. 2018-117243, REAL PROPERTY RECORDS, DENTON COUNTY, TEXAS, AS AFFECTED BY ENCROACHMENT AGREEMENT RECORDED UNDER CLERK'S FILE NO. 2024-385, REAL PROPERTY RECORDS, DENTON COUNTY, TEXAS
DOES AFFECT - AS SHOWN ON SURVEY

G. EASEMENT(S) AND RIGHTS INCIDENTAL THERETO, AS GRANTED IN A DOCUMENT:
GRANTED TO: SPECIFIED PROPERTIES LXXXI LP, A TEXAS LIMITED PARTNERSHIP
PURPOSE: AS PROVIDED IN SAID DOCUMENT
RECORDING DATE: AUGUST 18, 2023
RECORDING NO: UNDER CLERK'S FILE NO. 2023-88652, REAL PROPERTY RECORDS, DENTON COUNTY, TEXAS.
DOES AFFECT - AS SHOWN ON SURVEY

H. COVENANTS, CONDITIONS, RESTRICTIONS AND EASEMENTS BUT OMITTING ANY COVENANTS OR RESTRICTIONS, IF ANY, INCLUDING BUT NOT LIMITED TO THOSE BASED UPON RACE, COLOR, RELIGION, SEX, SEXUAL ORIENTATION, FAMILIAL STATUS, MARITAL STATUS, DISABILITY, HANDICAP, NATIONAL ORIGIN, ANCESTRY, SOURCE OF INCOME, GENDER, GENDER IDENTITY, GENDER EXPRESSION, MEDICAL CONDITION OR GENETIC INFORMATION, AS SET FORTH IN APPLICABLE STATE OR FEDERAL LAWS, EXCEPT TO THE EXTENT THAT SAID COVENANT OR RESTRICTION IS PERMITTED BY APPLICABLE LAW, AS SET FORTH IN THE DOCUMENT.
RECORDING DATE: APRIL 20, 2016
RECORDING NO: UNDER CLERK'S FILE NO. 2016-44485, REAL PROPERTY RECORDS, DENTON COUNTY, TEXAS.
DOES AFFECT - BLANKET IN NATURE - NOT A SURVEY MATTER

I. COVENANTS, CONDITIONS, RESTRICTIONS AND EASEMENTS BUT OMITTING ANY COVENANTS OR RESTRICTIONS, IF ANY, INCLUDING BUT NOT LIMITED TO THOSE BASED UPON RACE, COLOR, RELIGION, SEX, SEXUAL ORIENTATION, FAMILIAL STATUS, MARITAL STATUS, DISABILITY, HANDICAP, NATIONAL ORIGIN, ANCESTRY, SOURCE OF INCOME, GENDER, GENDER IDENTITY, GENDER EXPRESSION, MEDICAL CONDITION OR GENETIC INFORMATION, AS SET FORTH IN APPLICABLE STATE OR FEDERAL LAWS, EXCEPT TO THE EXTENT THAT SAID COVENANT OR RESTRICTION IS PERMITTED BY APPLICABLE LAW, AS SET FORTH IN THE DOCUMENT.
RECORDING DATE: JULY 9, 2021
RECORDING NO: UNDER CLERK'S FILE NO. 2021-123977, REAL PROPERTY RECORDS, DENTON COUNTY, TEXAS, AS AFFECTED BY FIRST AMENDMENT RECORDED UNDER CLERK'S FILE NO. 2023-88649, REAL PROPERTY RECORDS, DENTON COUNTY, TEXAS.
DOES AFFECT - BLANKET IN NATURE - NOT A SURVEY MATTER

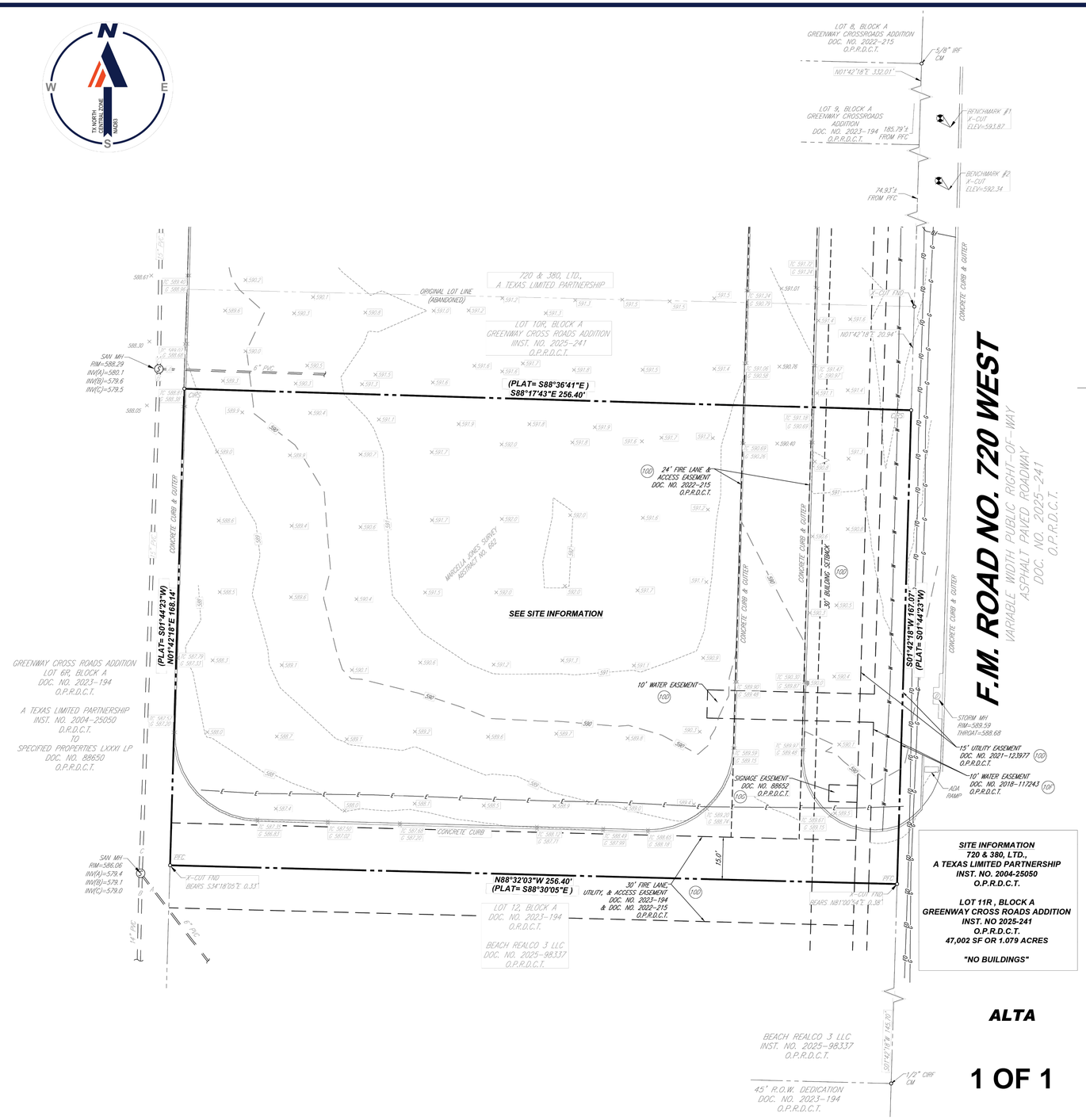

SITE LOCATION MAP

SCALE: 1" = 1,000'
SOURCE: AUTODESK GEOLOCATION MAP

LEGEND

—OH—OH—	OVERHEAD WIRES
—E—E—	APPROX LOC UNDERGROUND ELEC LINE PER UTILITY MARKOUT
—C—C—	APPROX LOC UNDERGROUND CABLE LINE PER UTILITY MARKOUT
—FO—FO—	APPROX LOC UNDERGROUND FIBER OPTIC LINE PER UTILITY MARKOUT
—G—G—	APPROX LOC UNDERGROUND GAS LINE PER UTILITY MARKOUT
—W—W—	APPROX LOC UNDERGROUND WATER LINE PER UTILITY MARKOUT
	APPROX LOC UNDERGROUND SEWER LINE
	APPROX LOC UNDERGROUND STORM LINE
	STORM DRAIN MANHOLE
	SANITARY SEWER MANHOLE
	TITLE REPORT EXCEPTION
X EX 123.45	EXIST TOP OF CURB ELEVATION
X G 122.95	EXIST GUTTER ELEVATION
123	EXISTING CONTOUR
X 123.4	EXISTING SPOT ELEVATION
X EP 122.95	EDGE OF PAVEMENT ELEVATION
	BENCHMARK
	IRON PIN FOUND
IRF	IRON ROD FOUND
PFC	POINT FOR CORNER
CIRF	CAPPED IRON ROD FOUND
FND	FOUND
DOC. NO.	DOCUMENT NUMBER
O.P.R.D.C.T.	OFFICIAL PUBLIC RECORDS, DENTON COUNTY, TEXAS
(CM)	CONTROLLING MONUMENT
CIRS	5/8" CAPPED IRON ROD SET, STAMPED "BOHLER ENG"

SITE INFORMATION
720 & 380, LTD.,
A TEXAS LIMITED PARTNERSHIP
INST. NO. 2004-25050
O.P.R.D.C.T.

LOT 11R , BLOCK A
GREENWAY CROSS ROADS ADDITION
INST. NO 2025-241
O.P.R.D.C.T.
47,002 SF OR 1.079 ACRES

"NO BUILDINGS"

ALTA

1 OF 1

PROJECT BENCHMARKS

BM # 1
"X" CUT IN CONTRETE LOCATED N 05°03'33" E ±185' FROM THE NORTHEAST CORNER OF THE SUBJECT PROPERTY
ELEVATION = 593.87'

BM # 2
"X" CUT IN CONCRETE LOCATED N 10°00'35" E ±75.82' NORTHEAST CORNER OF THE SUBJECT PROPERTY
ELEVATION = 592.34'

TO ALAMO TITLE COMPANY; FIDELITY NATIONAL TITLE INSURANCE COMPANY; BRAKES PLUS, L.L.C., A DELAWARE LIMITED LIABILITY COMPANY; EXPRESS OIL CHANGE, L.L.C.; & GILBREATH & COMPANY:

THIS IS TO CERTIFY THAT THIS MAP OR PLAT AND THE SURVEY ON WHICH IT IS BASED WERE MADE IN ACCORDANCE WITH THE 2026 MINIMUM STANDARD DETAIL REQUIREMENTS FOR ALTA / NSPS LAND TITLE SURVEYS, JOINTLY ESTABLISHED AND ADOPTED BY ALTA AND NSPS, AND INCLUDES ITEMS 1, 2, 3, 4, 5, 6(A), 6(B), 7(A), 7(B)(1), 7(C), 8, 9, 11(B), 13, 14, & 16 OF TABLE A THEREOF. THE FIELD WORK WAS COMPLETED ON 03-17-2026.

Preliminary
05/08/2026 7:58:16 AM

DAVID A. MINTON
REGISTERED PROFESSIONAL LAND SURVEYOR NO. 6233
05/08/2026

THIS CERTIFICATION IS MADE TO ONLY NAMED PARTIES FOR PURCHASE AND/OR MORTGAGE OF HEREIN DELINEATED PROPERTY BY THE NAMED PURCHASER. NO RESPONSIBILITY OR LIABILITY IS ASSUMED BY SURVEYOR FOR THE USE OF SURVEY FOR ANY OTHER PURPOSE INCLUDING, BUT NOT LIMITED TO, USE OF SURVEY AFFIDAVIT, RESALE OF PROPERTY, OR TO ANY OTHER PERSON NOT LISTED IN CERTIFICATION, EITHER DIRECTLY OR INDIRECTLY.

BOHLER™
SITE CIVIL AND CONSULTING ENGINEERING
LAND SURVEYING
PROGRAM MANAGEMENT
LANDSCAPE ARCHITECTURE
SUSTAINABLE DESIGN
PERMITTING SERVICES
TRANSPORTATION SERVICES

THE INFORMATION, DESIGN AND CONTENT OF THIS PLAN ARE PROPRIETARY AND SHALL NOT BE COPIED OR USED FOR ANY PURPOSE WITHOUT PRIOR WRITTEN AUTHORIZATION FROM BOHLER. ONLY APPROVED, SIGNED AND SEALED PLANS SHALL BE UTILIZED FOR CONSTRUCTION PURPOSES
© 2026 BOHLER

REVISIONS

REV	DATE	COMMENT	DRAWN BY / CHECKED BY
1	05/08/26	UPDATE BOUNDARY	Dr / DAM

PROJECT No.:	TXA260019.00.REV1
DRAWN BY:	~ AW/Dr ~
CHECKED BY:	~ ER/XR ~
DATE:	04/10/2026
CAD I.D.:	S-BOTO-SURV
FIELD DATE:	03/17/2026
CREW CHIEF:	~ DH ~
APPROVED:	~ DAM ~

Texas811
TEXAS
YOU MUST CALL 811 BEFORE ANY EXCAVATION WHETHER IT'S ON PRIVATE OR PUBLIC LAND.
1-800-344-8377
www.texas811.org

PROJECT:
ALTA/NSPS LAND TITLE SURVEY
FOR
EXPRESS OIL CHANGE
TIRE ENGINEERS

33°13'17.91"N 96°58'36.62"W

OAK GROVE LN & US HIGHWAY 380
DENTON COUNTY
AUBREY, TX

BOHLER
2600 NETWORK BLVD., SUITE 310
FRISCO, TX 75034
Phone: (469) 458-7300
TX@BohlerEng.com
TBPELS #10194942

20 10 5 0 20
SCALE: 1" = 20'

PRELIMINARY - NOT FOR RECORDATION, SALES OR CONVEYANCES

SHEET NUMBER:
1
OF 1

REVISION 1 - 05/08/2026

I:\2026\TXA260019.00\SURVEY\CADDRAWINGS\SURVEY\S-BOTO-SURV-TXA260019.00.REV1 ----LAYOUT: 24X36
DR

F.M. ROAD NO. 720 WEST

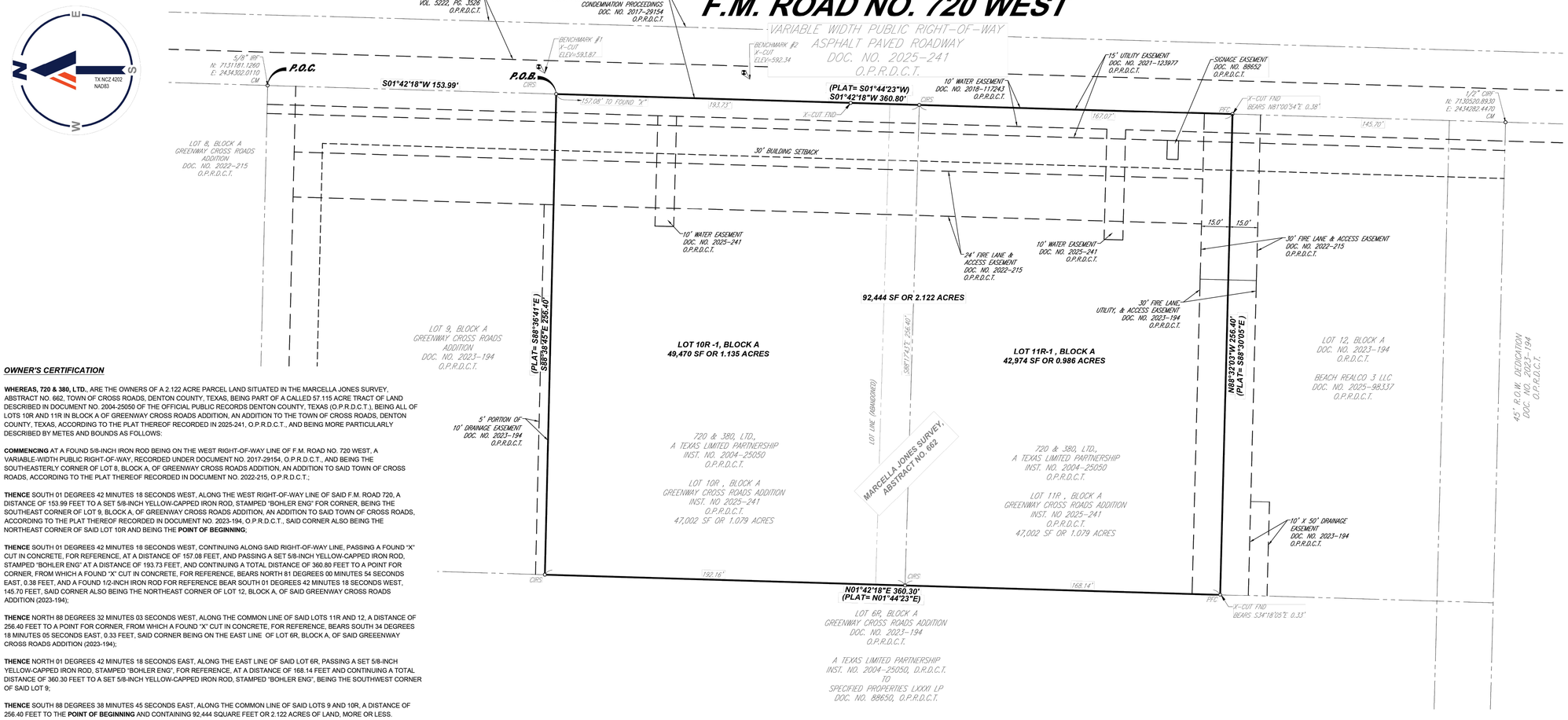

SITE LOCATION MAP

SCALE: 1" = 1,000'
SOURCE: AUTODESK GEOLOCATION MAP

LEGEND

———	SUBJECT BOUNDARY LINE
———	ADJOINER BOUNDARY LINE
— — —	EASEMENT
— — —	SETBACK
o	MONUMENT MARKER AS NOTED
P.O.C.	POINT OF COMMENCING
P.O.B.	POINT OF BEGINNING
IRF	IRON ROD FOUND
PFC	POINT FOR CORNER
CIRF	CAPPED IRON ROD FOUND
CIRS	5/8" CAPPED IRON ROD SET, STAMPED "BOHLER ENG"
FND	FOUND
DOC. NO.	DOCUMENT NUMBER
O.P.R.D.C.T.	OFFICIAL PUBLIC RECORDS, DENTON COUNTY, TEXAS
(CM)	CONTROLLING MONUMENT

GENERAL NOTES:

1. THE BASIS OF BEARING IS DERIVED FROM THE TRIMBLE CENTERPOINT RTX SERVICE - TEXAS STATE PLANE COORDINATE SYSTEM, TEXAS NORTH CENTRAL ZONE (4202), NAD83.

2. ACCORDING TO COMMUNITY PANEL NO. 48210C0405G, DATED APRIL 18, 2011 OF THE FEDERAL EMERGENCY MANAGEMENT AGENCY, NATIONAL FLOOD INSURANCE PROGRAM MAP, THIS PROPERTY IS WITHIN FLOOD ZONE "X", (AREAS DETERMINED TO BE OUTSIDE 500-YEAR FLOODPLAIN), WHICH IS NOT A SPECIAL FLOOD HAZARD AREA. IF THIS SITE IS NOT WITHIN AN IDENTIFIED SPECIAL FLOOD HAZARD AREA, THIS FLOOD STATEMENT DOES NOT IMPLY THAT THE PROPERTY AND/OR THE STRUCTURES THEREON WILL BE FREE FROM FLOODING OR FLOOD DAMAGE. ON RARE OCCASIONS, GREATER FLOODS CAN AND WILL OCCUR AND FLOOD HEIGHTS MAY BE INCREASED BY MAN-MADE OR NATURAL CAUSES. THIS STATEMENT SHALL NOT CREATE LIABILITY ON THE PART OF THE SURVEYOR.

3. THE PURPOSE OF THIS REPLAT IS TO MOVE THE COMMON LINE OF LOTS 10R AND 11R SOUTH, 15.71 FEET.

4. SELLING A PORTION OF THIS ADDITION BY METES AND BOUNDS IS A VIOLATION OF THE CITY SUBDIVISION ORDINANCE AND STATE PLATTING STATUTES AND IS SUBJECT TO FINES AND WITHHOLDING OF UTILITIES AND BUILDING CERTIFICATES.

OWNER'S CERTIFICATION

WHEREAS, 720 & 380, LTD., ARE THE OWNERS OF A 2.122 ACRE PARCEL LAND SITUATED IN THE MARCELLA JONES SURVEY, ABSTRACT NO. 662, TOWN OF CROSS ROADS, DENTON COUNTY, TEXAS, BEING PART OF A CALLED 57.115 ACRE TRACT OF LAND DESCRIBED IN DOCUMENT NO. 2004-25050 OF THE OFFICIAL PUBLIC RECORDS DENTON COUNTY, TEXAS (O.P.R.D.C.T.), BEING ALL OF LOTS 10R AND 11R IN BLOCK A OF GREENWAY CROSS ROADS ADDITION, AN ADDITION TO THE TOWN OF CROSS ROADS, DENTON COUNTY, TEXAS, ACCORDING TO THE PLAT THEREOF RECORDED IN 2025-241, O.P.R.D.C.T., AND BEING MORE PARTICULARLY DESCRIBED BY METES AND BOUNDS AS FOLLOWS:

COMMENCING AT A FOUND 5/8-INCH IRON ROD BEING ON THE WEST RIGHT-OF-WAY LINE OF F.M. ROAD NO. 720 WEST, A VARIABLE-WIDTH PUBLIC RIGHT-OF-WAY, RECORDED UNDER DOCUMENT NO. 2017-29154, O.P.R.D.C.T., AND BEING THE SOUTHEASTERLY CORNER OF LOT 8, BLOCK A, OF GREENWAY CROSS ROADS ADDITION, AN ADDITION TO SAID TOWN OF CROSS ROADS, ACCORDING TO THE PLAT THEREOF RECORDED IN DOCUMENT NO. 2022-215, O.P.R.D.C.T.;

THENCE SOUTH 01 DEGREES 42 MINUTES 18 SECONDS WEST, ALONG THE WEST RIGHT-OF-WAY LINE OF SAID F.M. ROAD 720, A DISTANCE OF 153.99 FEET TO A SET 5/8-INCH YELLOW-CAPPED IRON ROD, STAMPED "BOHLER ENG" FOR CORNER, BEING THE SOUTHEAST CORNER OF LOT 9, BLOCK A, OF GREENWAY CROSS ROADS ADDITION, AN ADDITION TO SAID TOWN OF CROSS ROADS, ACCORDING TO THE PLAT THEREOF RECORDED IN DOCUMENT NO. 2023-194, O.P.R.D.C.T., SAID CORNER ALSO BEING THE NORTHEAST CORNER OF SAID LOT 10R AND BEING THE **POINT OF BEGINNING**;

THENCE SOUTH 01 DEGREES 42 MINUTES 18 SECONDS WEST, CONTINUING ALONG SAID RIGHT-OF-WAY LINE, PASSING A FOUND "X" CUT IN CONCRETE, FOR REFERENCE, AT A DISTANCE OF 157.08 FEET, AND PASSING A SET 5/8-INCH YELLOW-CAPPED IRON ROD, STAMPED "BOHLER ENG" AT A DISTANCE OF 193.73 FEET, AND CONTINUING A TOTAL DISTANCE OF 360.80 FEET TO A POINT FOR CORNER, FROM WHICH A FOUND "X" CUT IN CONCRETE, FOR REFERENCE, BEARS NORTH 81 DEGREES 00 MINUTES 54 SECONDS EAST, 0.38 FEET, AND A FOUND 1/2-INCH IRON ROD FOR REFERENCE BEAR SOUTH 01 DEGREES 42 MINUTES 18 SECONDS WEST, 145.70 FEET, SAID CORNER ALSO BEING THE NORTHEAST CORNER OF LOT 12, BLOCK A, OF SAID GREENWAY CROSS ROADS ADDITION (2023-194);

THENCE NORTH 88 DEGREES 32 MINUTES 03 SECONDS WEST, ALONG THE COMMON LINE OF SAID LOTS 11R AND 12, A DISTANCE OF 256.40 FEET TO A POINT FOR CORNER, FROM WHICH A FOUND "X" CUT IN CONCRETE, FOR REFERENCE, BEARS SOUTH 34 DEGREES 18 MINUTES 05 SECONDS EAST, 0.33 FEET, SAID CORNER BEING ON THE EAST LINE OF LOT 6R, BLOCK A, OF SAID GREEENWAY CROSS ROADS ADDITION (2023-194);

THENCE NORTH 01 DEGREES 42 MINUTES 18 SECONDS EAST, ALONG THE EAST LINE OF SAID LOT 6R, PASSING A SET 5/8-INCH YELLOW-CAPPED IRON ROD, STAMPED "BOHLER ENG", FOR REFERENCE, AT A DISTANCE OF 168.14 FEET AND CONTINUING A TOTAL DISTANCE OF 360.30 FEET TO A SET 5/8-INCH YELLOW-CAPPED IRON ROD, STAMPED "BOHLER ENG", BEING THE SOUTHWEST CORNER OF SAID LOT 9;

THENCE SOUTH 88 DEGREES 38 MINUTES 45 SECONDS EAST, ALONG THE COMMON LINE OF SAID LOTS 9 AND 10R, A DISTANCE OF 256.40 FEET TO THE **POINT OF BEGINNING** AND CONTAINING 92,444 SQUARE FEET OR 2.122 ACRES OF LAND, MORE OR LESS.

OWNER'S DEDICATION

NOW, THEREFORE KNOW ALL MEN BY THESE PRESENTS:

WE, **720 & 380, LTD.** ARE THE OWNERS OF THE TRACTS OF LAND SHOWN HEREON AND DO ACCEPT THIS AS ITS PLAN FOR SUBDIVIDING INTO LOTS AND BLOCKS AND DO DEDICATE TO THE PUBLIC FOREVER THE STREETS, ALLEYS, AND EASEMENTS AS SHOWN, AND DO DEDICATE THE EASEMENTS FOR THE PURPOSES SHOWN ON THIS PLAT AND FOR THE MUTUAL BENEFIT, USE, AND ACCOMMODATION OF ALL PUBLIC UTILITY ENTITIES INCLUDING THE TOWN PROVIDING SERVICES TO THE ADDITION CREATED HEREBY AND DESIRING TO USE OR USING THE SAME, AND ALSO EASEMENTS AND RIGHT-OF-WAY, UNDER, ACROSS, AND UPON ALL LOTS SHOWN HEREON FOR THE CONSTRUCTION, INSTALLATION, MAINTENANCE, OPERATION, INSPECTION, REMOVAL, AND RECONSTRUCTION OF THE FACILITIES, EQUIPMENT, AND SYSTEMS OF SUCH PUBLIC UTILITY ENTITIES AND FOR THE USE, BENEFIT, AND ACCOMMODATION OF DENTON COUNTY, AND AN EASEMENT AND RIGHT-OF-WAY, UNDER, ACROSS, AND UPON AS SHOWN HEREON FOR ANY PURPOSE RELATED TO THE EXERCISE OF A GOVERNMENTAL SERVICE OR FUNCTION INCLUDING, BUT NOT LIMITED TO, FIRE AND POLICE PROTECTION, GARBAGE COLLECTION, INSPECTION, AND CODE ENFORCEMENT, AND THE REMOVAL OF ANY VEHICLE OR OBSTACLE THAT IMPAIRS EMERGENCY ACCESS.

EXCEPT FOR PRIVATE STREETS AND RELATED IMPROVEMENTS, NO BUILDING, FENCES, TREES, SHRUBS, OR OTHER IMPROVEMENTS OR GROWTHS SHALL BE CONSTRUCTED OR PLACED UPON, OR ACROSS THE EASEMENTS DEDICATED HEREIN. THE TOWN AND PUBLIC UTILITY ENTITIES SHALL HAVE THE RIGHT TO REMOVE AND KEEP REMOVED ALL OR PARTS OF ANY BUILDINGS, FENCES, TREES, SHRUBS, OR OTHER PROHIBITED IMPROVEMENTS OR GROWTHS WHICH MAY IN ANY WAY ENDANGER OR INTERFERE WITH THEIR RESPECTIVE EASEMENTS

THIS PLAT APPROVED SUBJECT TO ALL PLATTING ORDINANCES, RULES, REGULATIONS, AND RESOLUTIONS OF DENTON COUNTY, TEXAS.

WITNESS, MY HAND, THIS _____ DAY OF _____, 2026.

720 & 380, LTD.
A TEXAS LIMITED PARTNERSHIP

BY: GREENWAY - 720, INC.
A TEXAS CORPORATION, ITS GENERAL PARTNER

_____
NAME: TODD PETTY
TITLE: VICE PRESIDENT

STATE OF TEXAS §
COUNTY OF DALLAS §

BEFORE ME, THE UNDERSIGNED AUTHORITY, A NOTARY PUBLIC IN AND FOR THE STATE OF TEXAS, ON THIS DAY PERSONALLY APPEARED TODD PETTY, KNOWN TO ME TO BE THE PERSON WHOSE NAME IS SUBSCRIBED TO THE FOREGOING INSTRUMENT AND ACKNOWLEDGED TO ME THAT HE EXECUTED THE SAME FOR THE PURPOSE AND CONSIDERATIONS THEREIN EXPRESSED.

GIVEN UNDER MY HAND AND SEAL OF OFFICE, THIS _____ DAY OF _____, 2026.

_____
NOTARY PUBLIC IN AND FOR THE STATE OF TEXAS

CERTIFICATE OF SURVEYOR

STATE OF TEXAS §
COUNTY OF DENTON §

I, DAVID A. MINTON, A REGISTERED PROFESSIONAL SURVEYOR IN THE STATE OF TEXAS, HEREBY CERTIFIES THAT THIS PLAT IS TRUE AND CORRECT AND WAS PREPARED FROM AN ACTUAL SURVEY OF THE PROPERTY MADE UNDER MY SUPERVISION ON THE GROUND.

_____ _____
DAVID A. MINTON DATE
REGISTERED PROFESSIONAL LAND SURVEYOR 6233

STATE OF TEXAS §
COUNTY OF COLLIN §

BEFORE ME, THE UNDERSIGNED AUTHORITY, ON THIS DAY PERSONALLY APPEARED DAVID A. MINTON, KNOWN TO ME TO BE THE PERSON WHOSE NAME IS SUBSCRIBED TO THE FOREGOING INSTRUMENT, AND ACKNOWLEDGED TO ME THAT HE EXECUTED THE SAME FOR THE PURPOSES AND CONSIDERATIONS THEREIN STATED.

GIVEN UNDER MY HAND AND SEAL OF OFFICE THIS _____DAY OF_____, 2026.

_____
NOTARY PUBLIC, STATE OF TEXAS

RECOMMEND FOR APPROVAL

_____ _____
CHAIRPERSON, PLANNING AND ZONING COMMISSION DATE

_____ _____
MAYOR, TOWN OF CROSS ROADS DATE

THE UNDERSIGNED, THE TOWN SECRETARY OF THE TOWN OF CROSS ROADS, TEXAS, HEREBY CERTIFIES THAT THE FOREGOING FINAL PLAT OF THE GREENWAY CROSS ROADS ADDITION TO THE TOWN OF CROSS ROADS WAS SUBMITTED TO THE TOWN COUNCIL ON THE _____ DAY OF _____, 2026, AND THE COUNCIL, BY FORMAL ACTION, THEN AND THERE ACCEPTED THE DEDICATION OF STREETS, ALLEYS, PARKS, EASEMENTS, PUBLIC PARKS, AND WATER AND SEWER LINES, AS SHOWN AND SET FORTH IN AND UPON SAID PLAT, AND SAID COUNCIL FURTHER AUTHORIZES THE MAYOR TO NOTE THE ACCEPTANCE THEREOF FOR CONSTRUCTION BY SIGNING HIS/HER NAME AS HEREIN ABOVE SUBSCRIBED.

WITNESS MY HAND THIS _____ DAY OF _____, 2026.

CERTIFICATE

IN ACCORDANCE WITH SECTION 212.009 OF THE TEXAS LOCAL GOVERNMENT CODE, THIS PLAT WAS FILED WITH THE TOWN OF CROSS ROADS ON _____ (DATE). THE GOVERNING BODY OF THE TOWN OF CROSS ROADS FAILED TO ACT ON THE PLAT WITHIN THE PERIOD PRESCRIBED BY LAW AND IS THEREBY CONSIDERED TO HAVE BEEN APPROVED.

_____
TOWN ADMINISTRATOR

_____
TOWN ADMINISTRATOR

REPLAT

LOTS 10R-1 & 11R-1, BLOCK A GREENWAY CROSS ROADS ADDITION

2.1223 ACRES
BEING A REPLAT OF
LOTS 10R & 11R, BLOCK A
GREENWAY CROSS ROADS ADDITION
DOCUMENT NO. 2025-241
OFFICIAL PUBLIC RECORDS OF DENTON COUNTY, TEXAS
SITUATED IN THE
MARCELLA JONES SURVEY, ABSTRACT NO. 662
TOWN OF CROSS ROADS
DENTON COUNTY, TEXAS
MAY 13, 2026

BOHLER™
2600 NETWORK BLVD., SUITE 310
FRISCO, TEXAS 75034
469.458.7300
www.bohlereng.com
TBPELS No. 10194942

LAND SURVEYING
SUSTAINABLE DESIGN

SITE CIVIL AND CONSULTING ENGINEERING
PROGRAM MANAGEMENT
PERMITTING SERVICES

LANDSCAPE ARCHITECTURE
TRANSPORTATION SERVICES

FILE NO.	DATE	DRAWN	REVIEWED	APPROVED	SCALE	DWG. NO.
TD210000	05/13/2025	Dr	DAM	DAM	1" = 30'	1 OF 1

OWNER OF LOTS 10R & 11R:

720 & 380, LTD.
2808 FAIRMONT STREET, SUITE 100
PHONE: 214-880-9050
CONTACT: TODD PETTY

ENGINEER:

BOHLER ENGINEERING
2600 NETWORK BLVD, SUITE 310
FRISCO, TX 75034
PHONE: (469) 458-7300
CONTACT: MATHIAS HAUBERT

SURVEYOR:

BOHLER ENGINEERING
2600 NETWORK BLVD, SUITE 310
FRISCO, TX 75034
PHONE: (469) 458-7300
CONATCT: DAVID A. MINTON

REPLAT

1 OF 1

BOHLER ENGINEERING: ALL RIGHTS RESERVED.
THE COPYING OR REUSE OF THIS DOCUMENT, OR PORTIONS THEREOF, FOR OTHER THAN THE ORIGINAL PROJECT OR THE PURPOSE ORIGINALLY INTENDED, WITHOUT THE WRITTEN PERMISSION OF BOHLER ENGINEERING, IS PROHIBITED.

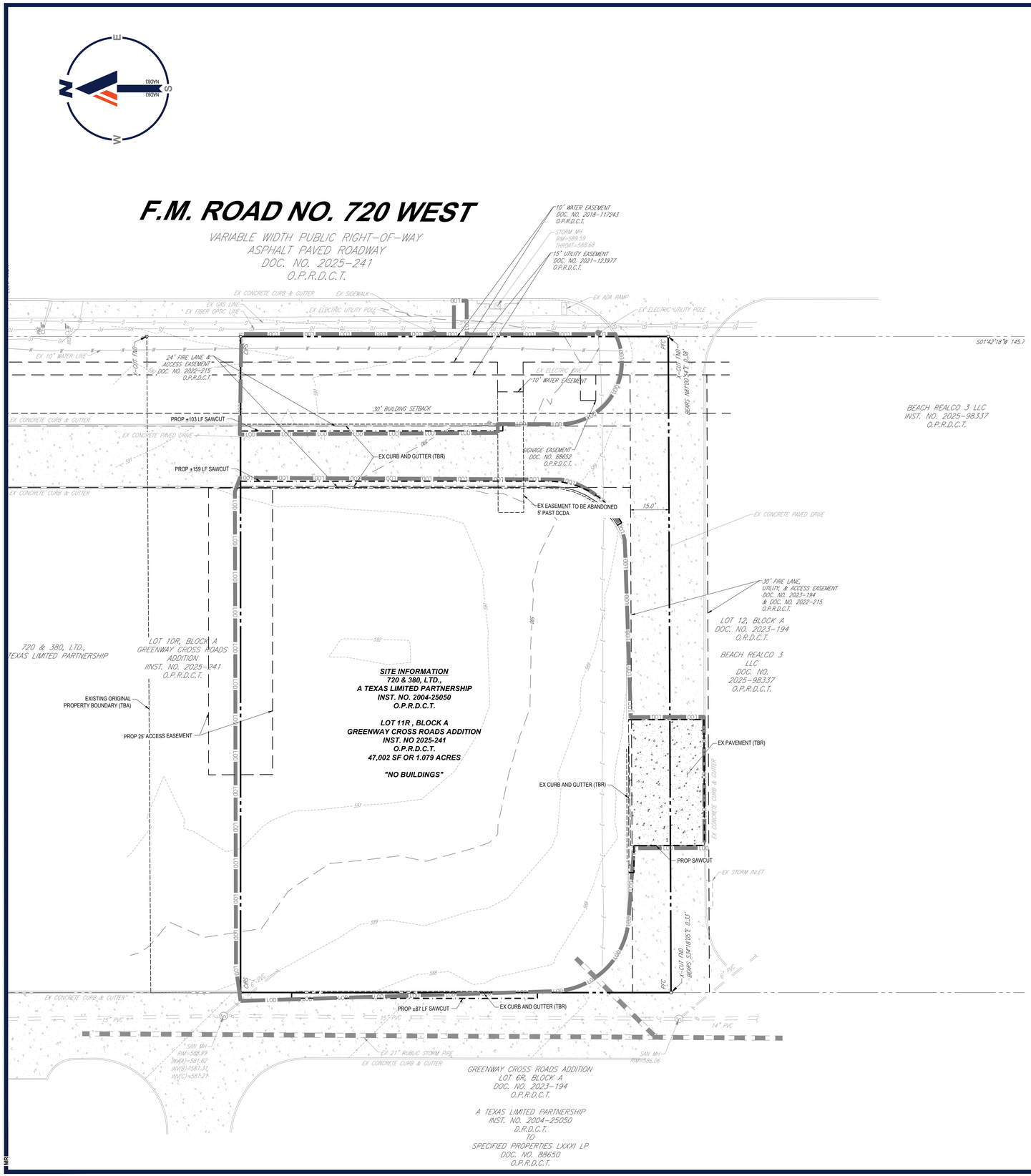

DEMOLITION NOTES

1. SEE SHEET C-102 FOR GENERAL NOTES, STANDARD ABBREVIATIONS, AND STANDARD DRAWING LEGEND.
2. TOTAL LIMITS OF DISTURBANCE IS 0.86 AC.
3. CONTRACTOR SHALL PERFORM ALL WORK IN ACCORDANCE WITH THE REQUIREMENTS OF THE OCCUPATIONAL SAFETY AND HEALTH ACT OF 1970, (29 U.S.C. 651 ET SEQ.), AS AMENDED AND ANY MODIFICATIONS, AMENDMENTS OR REVISIONS TO SAME.
4. BOHLER ENGINEERING TX, LLC HAS NO CONTRACTUAL, LEGAL, OR OTHER RESPONSIBILITY FOR JOB SITE SAFETY OR JOB SITE SUPERVISION, OR ANYTHING RELATED TO SAME.
5. THE DEMOLITION PLAN IS INTENDED TO PROVIDE GENERAL INFORMATION ONLY, REGARDING ITEMS TO BE DEMOLISHED AND/OR REMOVED. THE CONTRACTOR MUST ALSO REVIEW THE OTHER SITE PLAN DRAWINGS AND INCLUDE IN DEMOLITION ACTIVITIES ALL INCIDENTAL WORK NECESSARY FOR THE CONSTRUCTION OF THE NEW SITE IMPROVEMENTS.
6. CONTRACTOR MUST RAISE ANY QUESTIONS CONCERNING THE ACCURACY OR INTENT OF THESE PLANS OR SPECIFICATIONS, CONCERNS REGARDING THE APPLICABLE SAFETY STANDARDS, OR THE SAFETY OF THE CONTRACTOR OR THIRD PARTIES IN PERFORMING THE WORK ON THIS PROJECT, WITH BOHLER ENGINEERING, IN WRITING, AND RESPONDED TO BY BOHLER, IN WRITING, PRIOR TO THE INITIATION OF ANY SITE ACTIVITY AND ANY DEMOLITION ACTIVITY. ALL DEMOLITION ACTIVITIES MUST BE PERFORMED IN ACCORDANCE WITH THE REQUIREMENTS OF THESE PLANS AND SPECIFICATIONS AND ALL APPLICABLE FEDERAL, STATE AND LOCAL REGULATIONS, RULES, REQUIREMENTS, STATUTES, ORDINANCES AND CODES.
7. PRIOR TO STARTING ANY DEMOLITION, CONTRACTOR IS RESPONSIBLE FOR OBTAINING ALL REQUIRED PERMITS AND MAINTAINING THE SAME ON SITE FOR REVIEW BY THE ENGINEER OF RECORD AND OTHER PUBLIC AGENCIES HAVING JURISDICTION THROUGHOUT THE DURATION OF THE PROJECT, SITE WORK AND DEMOLITION WORK.
8. THE LOCATION OF EXISTING UNDERGROUND UTILITIES AS INDICATED ON THE PLAN IS APPROXIMATE. CONTRACTOR TO FIELD LOCATE ALL UNDERGROUND EXISTING UTILITIES LOCATED IN THE AREA OF WORK PRIOR TO THE COMMENCEMENT OF CONSTRUCTION. CALL TEXAS811 PRIOR TO CONSTRUCTION FOR ASSISTANCE IN LOCATING EXISTING UNDERGROUND UTILITIES. SUBSURFACE FEATURES ARE SHOWN IN AN APPROXIMATE LOCATION. CONTRACTOR IS RESPONSIBLE FOR SUBSURFACE UTILITY EXPLORATION TO DETERMINE UNDERGROUND UTILITY LOCATIONS AND DEPTH. UNDERGROUND UTILITY LOCATIONS SHOWN ARE TO STANDARD OF ACCURACY BASED ON UTILITY MARKOUT METHOD NOTED IN THE REFERENCED SURVEY. CONTRACTOR IS RESPONSIBLE FOR FIELD VERIFYING ANY CROSSING/CONFLICT PRIOR TO STARTING CONSTRUCTION OF RELATED ADJACENT INFRASTRUCTURE AND NOTIFIYING THE ENGINEER OF RECORD IN WRITING OF ANY CONFLICTS.
9. CONTRACTOR TO COORDINATE ALL UTILITY REMOVAL, RELOCATION, & ABANDONMENT WITH THE APPROPRIATE UTILITY SERVICE PROVIDER. CONTRACTOR SHALL COORDINATE WITH UTILITY PROVIDER PRIOR TO DISRUPTING SERVICE. CONTRACTOR IS RESPONSIBLE FOR MAINTAINING ALL UTILITY SERVICES TO ADJACENT PROPERTIES DURING ALL PHASES OF CONSTRUCTION.
10. CONTRACTOR TO REMOVE ANY UTILITY SERVICES NO LONGER UTILIZED WITHIN THE PROJECT PARCEL AND REMOVE BACK TO THE MAIN SERVICE LINE IN ACCORDANCE WITH ALL LOCAL, STATE, AND FEDERAL STANDARDS AND REGULATIONS.
11. ALL SIDEWALKS AND CURB AND GUTTER SECTIONS SHALL BE REMOVED BY SAWCUTTING THE NEAREST CONTROL JOINT AWAY FROM THE LOCATION DESIGNATED FOR REMOVAL ON THE PLANS. EXISTING PAVEMENT SHALL BE SAWCUT IN ALL LOCATIONS WHERE ABUTTING NEW PAVEMENT OR CONCRETE. CONTRACTOR SHALL SAWCUT PAVEMENT NOT EXPLICITLY SHOWN IN THIS PLAN TO ENSURE COMPLIANCE WITH PROPOSED GRADES IF EXISTING CONCRETE IS PRESENT AND MODIFICATION IS NECESSARY.
12. EXISTING STRUCTURES WITHIN CONSTRUCTION LIMITS ARE TO BE ABANDONED, REMOVED OR RELOCATED AS NECESSARY. ALL COSTS SHALL BE INCLUDED IN BASE BID. CONTRACTOR IS RESPONSIBLE FOR DAMAGES TO EXISTING INFRASTRUCTURE AND SHALL REPLACE AND/OR REPAIR IN-KIND.
13. CONTRACTOR TO ESTABLISH NEW BENCHMARKS IF EXISTING BENCHMARK WILL BE DISTURBED OR REMOVED.
14. CONTRACTOR TO REMOVE EXISTING TREES OR PLANTS AS SHOWN ON THE TREE DISPOSITION PLAN WITHIN THE LIMITS OF DISTURBANCE. CONTRACTOR TO OBTAIN APPROVAL FROM THE OWNER AND ENGINEER OF RECORD PRIOR TO REMOVING EXISTING TREES NOT SHOWN ON THE TREE DISPOSITION PLAN.TREES TO BE PRESERVED SHALL BE ADEQUATELY FENCED PRIOR TO CONSTRUCTION.
15. THIS PLAN WAS PREPARED WITH SITE BOUNDARY, TOPOGRAPHY, UTILITY, AND ROAD INFORMATION TAKEN FROM A SURVEY PREPARED BY A LAND SURVEYOR. SEE SHEET 1 FOR SURVEY REFERENCE.

DEMO LEGEND

TBR	TO BE REMOVED
TBA	TO BE ABANDONED
TBRL	TO BE RELOCATED
TR	TO REMAIN
EX	EXISTING

THIS PLAN TO BE UTILIZED FOR DEMOLITION PURPOSES ONLY

20 10 5 0 20
SCALE: 1" = 20'

BOHLER™

SITE CIVIL AND CONSULTING ENGINEERING
LAND SURVEYING
PROGRAM MANAGEMENT
LANDSCAPE ARCHITECTURE
SUSTAINABLE DESIGN
PERMITTING SERVICES
TRANSPORTATION SERVICES

THE INFORMATION, DESIGN AND CONTENT OF THIS PLAN ARE PROPRIETARY AND SHALL NOT BE COPIED OR USED FOR ANY PURPOSE WITHOUT PRIOR WRITTEN AUTHORIZATION FROM BOHLER. ONLY APPROVED, SIGNED AND SEALED PLANS SHALL BE UTILIZED FOR CONSTRUCTION PURPOSES
© BOHLER

REVISIONS

REV	DATE	COMMENT	DRAWN BY / CHECKED BY
0	08/27/26	ISSUED FOR BID	MFR / SEL

TEXAS
YOU MUST CALL 811 BEFORE ANY EXCAVATION
WHETHER IT'S ON PRIVATE OR PUBLIC LAND.
1-800-344-8377
www.texas811.org

PRELIMINARY

THIS DRAWING IS INTENDED FOR MUNICIPAL AND/OR AGENCY REVIEW AND APPROVAL. IT IS NOT INTENDED AS A CONSTRUCTION DOCUMENT UNLESS INDICATED OTHERWISE.

PROJECT No.:	TXA260019.00-0A
DRAWN BY:	FR
CHECKED BY:	MJH
DATE:	06/05/2026
CAD I.D.:	P-CIVL-EXDM

PROJECT:

CONSTRUCTION DOCUMENTS

FOR

EXPRESS OIL CHANGE
TIRE ENGINEERS

PROPOSED
MINOR AUTOMOTIVE REPAIR

SW CORNER OF US 380 & FM 720
CROSS ROADS, TX 76227
LOT 11R, BLOCK A

BOHLER™
2600 NETWORK BLVD., SUITE 310
FRISCO, TX 75034
Phone: (469) 458-7300
TX@BohlerEng.com
TBPE NO. 18065 | TBPLS NO. 10194413

PLANS PREPARED BY
BOHLER
FOR REVIEW PURPOSES ONLY
MATHIAS J. HAUBERT
LICENSE NUMBER: 138306

SHEET TITLE:
EXISTING CONDITIONS & DEMOLITION PLAN

SHEET NUMBER:
C-201

ORG. DATE - 06/30/2026

Aug 25, 2026
P:\TX\3026\TXA260019.00\CAD\DRAWINGS\PLAN SETS\CIVIL SITE PLAN\SP-CIVL-EXDM-TXA260019.00.0A------3-LAYOUT C-201 EXISTING CONDITIONS AND DEMOLITION PLAN
MRS

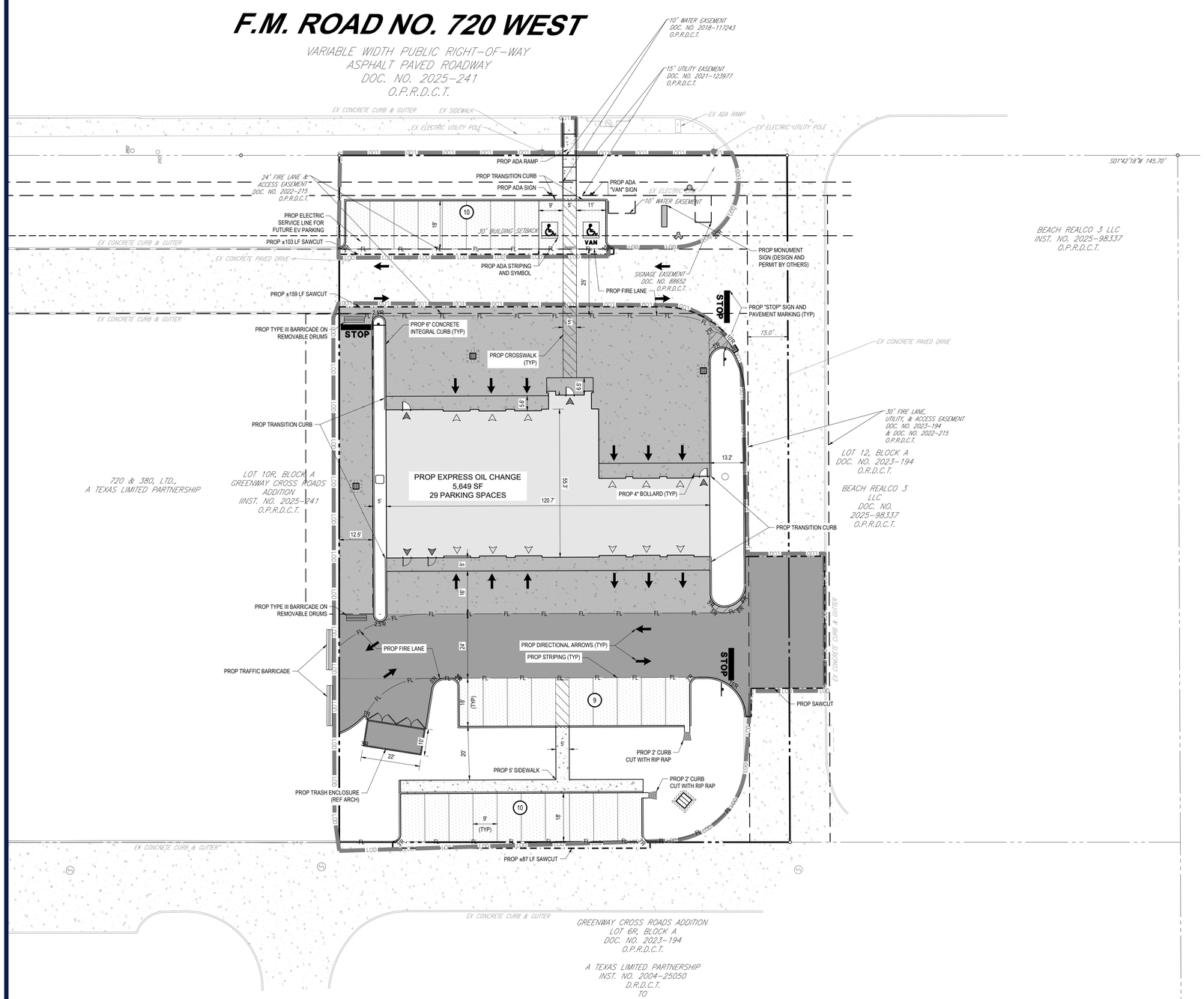

SITE NOTES:

1. SEE SHEET C-102 FOR GENERAL NOTES, STANDARD ABBREVIATIONS, AND STANDARD DRAWING LEGEND.
2. ALL CURB RADII ARE 3' UNLESS NOTED OTHERWISE.
3. ALL DIMENSIONS ARE SHOWN AT FACE OF CURB, UNLESS OTHERWISE NOTED.
4. CONTRACTOR SHALL REFER TO THE ARCHITECTURAL PLANS FOR EXACT LOCATIONS AND DIMENSIONS OF VESTIBULES, TRASH ENCLOSURES, SLOPE PAVING, SIDEWALKS, EXIT PORCHES, PRECISE BUILDING DIMENSIONS AND EXACT BUILDING UTILITY ENTRANCE LOCATIONS. ARCHITECTURAL, STRUCTURAL, MECHANICAL/ELECTRICAL/PLUMBING, LANDSCAPE AND LIGHTING PLANS ARE TO BE PROVIDED BY OTHERS.
5. CONTRACTOR SHALL BE RESPONSIBLE FOR ALL RELOCATIONS, (UNLESS OTHERWISE NOTED ON PLANS) INCLUDING BUT NOT LIMITED TO, UTILITIES, STORM DRAINAGE, SIGNS, TRAFFIC SIGNALS & POLES, ETC. AS REQUIRED. ALL WORK SHALL BE IN ACCORDANCE WITH GOVERNING AUTHORITIES REQUIREMENTS AND PROJECT SITE WORK SPECIFICATIONS AND SHALL BE APPROVED BY SUCH. ALL COST SHALL BE INCLUDED IN BASE BID.
6. THIS PLAN WAS PREPARED WITH SITE BOUNDARY, TOPOGRAPHY, UTILITY, AND ROAD INFORMATION TAKEN FROM A SURVEY PREPARED BY A LAND SURVEYOR. SEE SHEET C-101 FOR SURVEY REFERENCE.
7. THIS PLAN WAS PREPARED WITH A GEOTECHNICAL ANALYSIS PREPARED BY A GEOTECHNICAL ENGINEER. SEE SHEET C-101 FOR GEOTECHNICAL REFERENCE.
8. THE PROPERTY AREA IS NOT LOCATED WITHIN A FLOODPLAIN BASED ON THE FEDERAL EMERGENCY MANAGEMENT AGENCY (FEMA) FLOOD MAP, NUMBER 48121C0405G, DATED 04/18/2011.
9. PROPOSED FIRE LANES SHALL BE CONSTRUCTED TO LOCAL, STATE, AND IFC REQUIREMENTS.
10. PROPOSED SIGNAGE SHOWN IS FOR REPRESENTATIONAL PURPOSES ONLY AND SHALL BE PERMITTED SEPARATELY.

SITE DATA

PARCEL AREA	42,974 SF (0.99 AC)
ZONING	
EXISTING ZONING	PLANNED DEVELOPMENT
PROPOSED BUILDING TYPE	COMMERCIAL BUILDING
PROPOSED USE	MINOR AUTOMOTIVE REPAIR
SETBACKS REQUIRED	FRONT: N/A SIDE: N/A REAR: N/A
BUILDING	
BUILDING AREA	± 5,649 SF
BUILDING HEIGHT	28' (1 STORY)
IMPERVIOUS AREA	25,265 SF (0.58 AC)
OPEN SPACE AREA	17,424 SF (0.40 AC)
PARKING	
PROPOSED NON-ADA COMPLIANT PARKING	27 SPACES
PROPOSED ADA-COMPLIANT PARKING	2 SPACES (1 VAN)
TOTAL PROPOSED PARKING	29 SPACES

HATCH LEGEND

REFER TO SHEET C-901 FOR PAVEMENT SECTION DETAILS.

- PROP BUILDING (SEE ARCH DRAWINGS)
- LIGHT-DUTY CONCRETE PAVEMENT
- MEDIUM-DUTY CONCRETE PAVEMENT
- HEAVY-DUTY CONCRETE PAVEMENT
- PROPOSED CONCRETE SIDEWALK
- PAVEMENT & ADA STRIPING

THIS PLAN TO BE UTILIZED FOR SITE LAYOUT PURPOSES ONLY

20 10 5 0 20
SCALE: 1" = 20'

BOHLER™
SITE CIVIL AND CONSULTING ENGINEERING
LAND SURVEYING
PROGRAM MANAGEMENT
LANDSCAPE ARCHITECTURE
SUSTAINABLE DESIGN
PERMITTING SERVICES
TRANSPORTATION SERVICES

THE INFORMATION, DESIGN AND CONTENT OF THIS PLAN ARE PROPRIETARY AND SHALL NOT BE COPIED OR USED FOR ANY PURPOSE WITHOUT PRIOR WRITTEN AUTHORIZATION FROM BOHLER. ONLY APPROVED, SIGNED AND SEALED PLANS SHALL BE UTILIZED FOR CONSTRUCTION PURPOSES.
© BOHLER, INC.

REVISIONS

REV	DATE	COMMENT	DRAWN BY / CHECKED BY
0	08/27/26	ISSUED FOR BID	MFR SEL

TEXAS
YOU MUST CALL 811 BEFORE ANY EXCAVATION WHETHER IT'S ON PRIVATE OR PUBLIC LAND.
1-800-344-8377
www.texas811.org

PRELIMINARY

THIS DRAWING IS INTENDED FOR MUNICIPAL AND/OR AGENCY REVIEW AND APPROVAL. IT IS NOT INTENDED AS A CONSTRUCTION DOCUMENT UNLESS INDICATED OTHERWISE.

PROJECT No.:	TXA260019.00-0A
DRAWN BY:	FR
CHECKED BY:	MJH
DATE:	06/05/2026
CAD I.D.:	P-CIVL-SITE

PROJECT:

CONSTRUCTION DOCUMENTS

FOR

EXPRESS OIL CHANGE TIRE ENGINEERS

PROPOSED
MINOR AUTOMOTIVE REPAIR

SW CORNER OF US 380 & FM 720
CROSS ROADS, TX 76227
LOT 11R, BLOCK A

BOHLER™
2600 NETWORK BLVD., SUITE 310
FRISCO, TX 75034
Phone: (469) 458-7300
TX@BohlerEng.com
TBPE NO. 18065 | TBPLS NO. 10194413

PLANS PREPARED BY
BOHLER
FOR REVIEW PURPOSES ONLY
MATHIAS J. HAUBERT
LICENSE NUMBER: 138306

SHEET TITLE:

SITE PLAN

SHEET NUMBER:

C-301

ORG. DATE - 06/30/2026

Aug 25, 2026
P:\TX\260\TXA260019.00\CAD\DRAWINGS\PLAN SETS\CIVIL SITE PLAN\SP-CIVL-SITE-TXA260019.00-0A----->LAYOUT: C-301 SITE PLAN
MRF

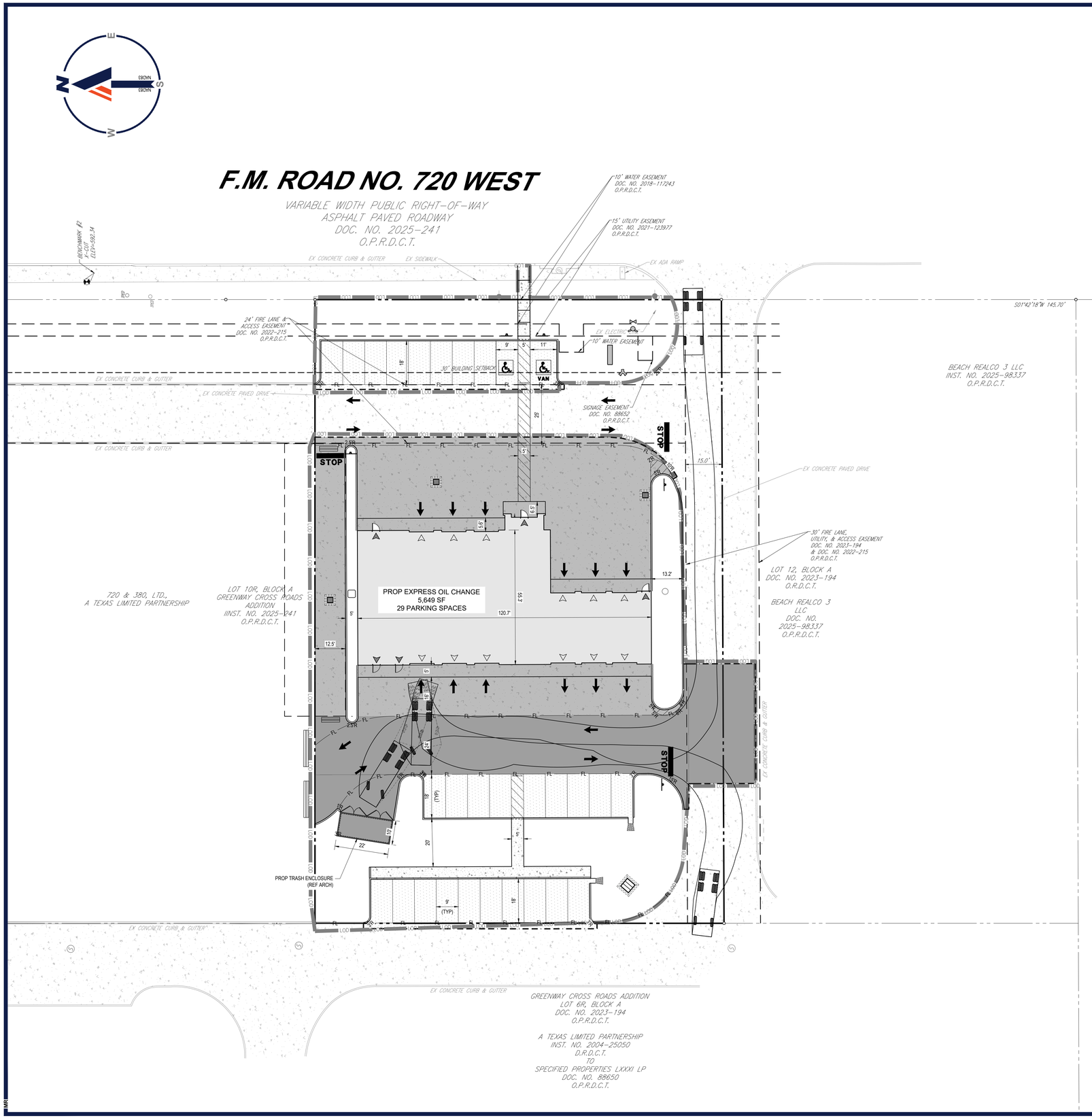

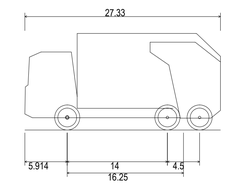

DUMPSTER TRUCK	
Overall Length	27.330ft
Overall Width	8.000ft
Overall Body Height	13.499ft
Min Body Ground Clearance	1.661ft
Track Width	8.000ft
Lock-to-lock time	5.00s
Wall to Wall Turning Radius	37.010ft

THIS PLAN TO BE UTILIZED FOR SITE LAYOUT PURPOSES ONLY

20 10 5 0 20

SCALE: 1" = 20'

BOHLER™

SITE CIVIL AND CONSULTING ENGINEERING
LAND SURVEYING
PROGRAM MANAGEMENT
LANDSCAPE ARCHITECTURE
SUSTAINABLE DESIGN
PERMITTING SERVICES
TRANSPORTATION SERVICES

THE INFORMATION, DESIGN AND CONTENT OF THIS PLAN IS THE PROPERTY OF AND SHALL NOT BE COPIED OR USED FOR ANY PURPOSE WITHOUT PRIOR WRITTEN AUTHORIZATION FROM BOHLER. ONLY APPROVED, SIGNED AND SEALED PLANS SHALL BE UTILIZED FOR CONSTRUCTION PURPOSES
© BOHLER

REVISIONS

REV	DATE	COMMENT	DRAWN BY / CHECKED BY
0	08/27/26	ISSUED FOR BID	MFR / SEL

TEXAS
YOU MUST CALL 811 BEFORE ANY EXCAVATION WHETHER IT'S ON PRIVATE OR PUBLIC LAND.
1-800-344-8377
www.texas811.org

PRELIMINARY

THIS DRAWING IS INTENDED FOR MUNICIPAL AND/OR AGENCY REVIEW AND APPROVAL. IT IS NOT INTENDED AS A CONSTRUCTION DOCUMENT UNLESS INDICATED OTHERWISE.

PROJECT No.:	TXA260019.00-0A
DRAWN BY:	FR
CHECKED BY:	MJH
DATE:	06/05/2026
CAD I.D.:	P-CIVL-SITE

PROJECT:

CONSTRUCTION DOCUMENTS

FOR

PROPOSED
MINOR AUTOMOTIVE REPAIR

SW CORNER OF US 380 & FM 720
CROSS ROADS, TX 76227
LOT 11R, BLOCK A

BOHLER
2600 NETWORK BLVD., SUITE 310
FRISCO, TX 75034
Phone: (469) 458-7300
TX@BohlerEng.com
TBPE NO. 18065 | TBPLS NO. 10194413

PLANS PREPARED BY
BOHLER
FOR REVIEW PURPOSES ONLY
MATHIAS J. HAUBERT
LICENSE NUMBER: 138306

SHEET TITLE:

TRUCK TURN PLAN

SHEET NUMBER:

C-302

ORG. DATE - 06/30/2026

Aug 25, 2026
P:\TX\260\TXA260019.00\CAD\DRAWINGS\PLAN SETS\CIVIL SITE PLANS\P-CIVL-SITE-TXA260019.00-0A----->LAYOUT: C-302 TRUCK TURN PLAN
MRF

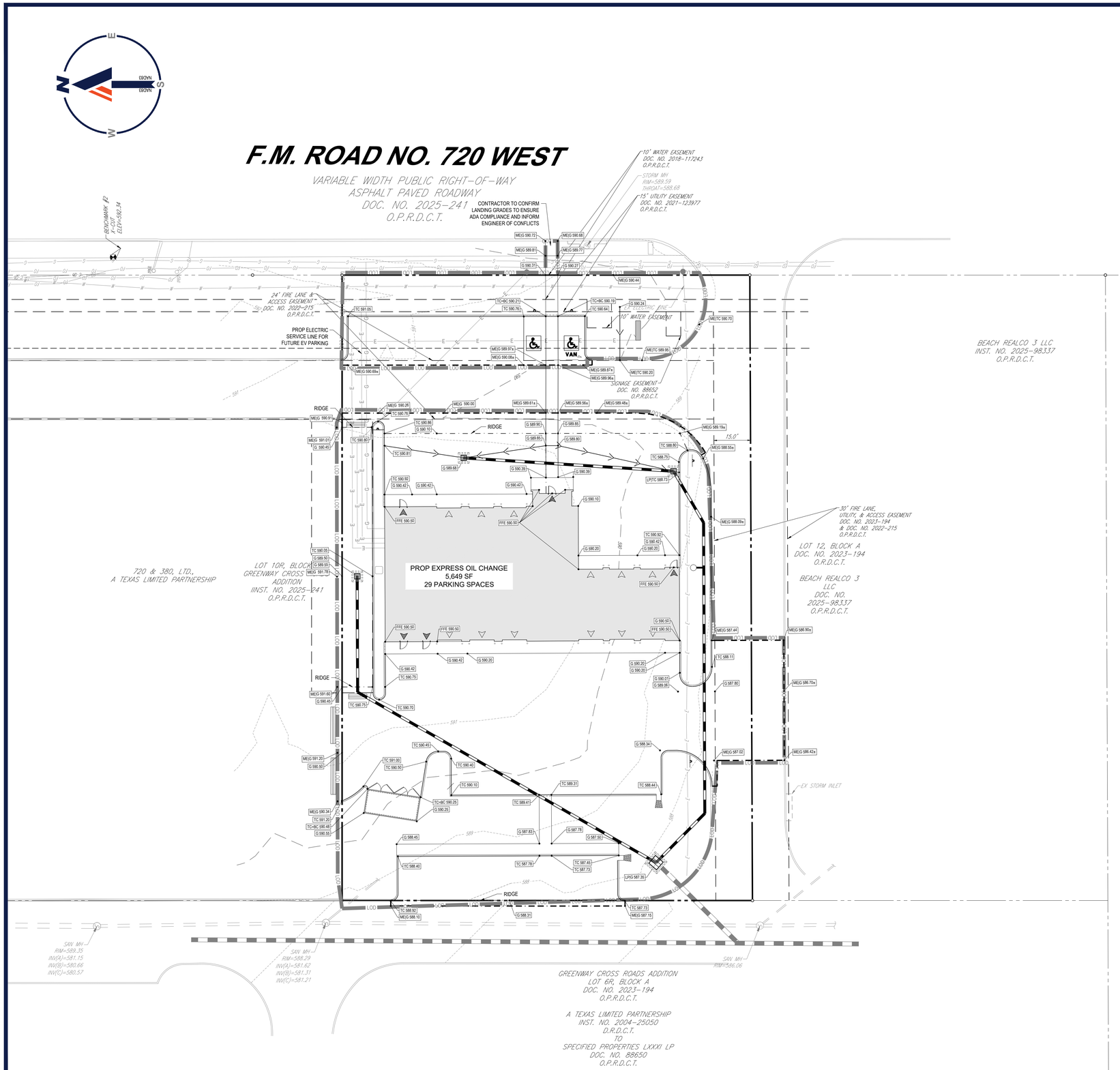

GRADING NOTES:

1. SEE SHEET C-102 FOR GENERAL NOTES, STANDARD ABBREVIATIONS, AND STANDARD DRAWING LEGEND.
2. ALL CONSTRUCTION TO BE IN ACCORDANCE WITH THESE PLANS AND THE CITY OF CROSSROADS STANDARDS AND SPECIFICATIONS.
3. PRIOR TO STARTING CONSTRUCTION, THE CONTRACTOR SHALL MAKE CERTAIN THAT ALL REQUIRED PERMITS AND APPROVALS HAVE BEEN OBTAINED. NO CONSTRUCTION OR FABRICATION SHALL BEGIN UNTIL THE CONTRACTOR HAS RECEIVED AND THOROUGHLY REVIEWED ALL PLANS AND OTHER DOCUMENTS APPROVED BY ALL OF THE PERMITTING AUTHORITIES.
4. THE GENERAL CONTRACTOR AND ALL SUB-CONTRACTORS SHALL VERIFY THE SUITABILITY OF ALL EXISTING AND PROPOSED SITE CONDITIONS INCLUDING GRADES AND DIMENSIONS BEFORE COMMENCEMENT OF ANY CONSTRUCTION. THE ENGINEER SHALL BE NOTIFIED IMMEDIATELY OF ANY DISCREPANCIES, MINOR ADJUSTMENTS TO FINISH GRADE TO ACCOMPLISH SPOT DRAINAGE ARE ACCEPTABLE, IF NECESSARY. PAVING INSTALLED SHALL "FLUSH OUT" AT ANY JUNCTURE WITH EXISTING PAVING.
5. IF THE CONTRACTOR DOES NOT ACCEPT EXISTING TOPOGRAPHY AS SHOWN ON THE PLANS, WITHOUT EXCEPTION, THEN THE CONTRACTOR SHALL SUPPLY, AT THEIR EXPENSE, A TOPOGRAPHIC SURVEY BY A REGISTERED LAND SURVEYOR TO THE OWNER FOR REVIEW.
6. THE CONTRACTOR IS SPECIFICALLY CAUTIONED THAT THE LOCATION AND/OR ELEVATION OF EXISTING UTILITIES AS SHOWN ON THESE PLANS IS BASED ON RECORDS OF THE VARIOUS UTILITY COMPANIES, AND WHERE POSSIBLE, MEASUREMENTS TAKEN IN THE FIELD. THE INFORMATION IS NOT TO BE RELIED ON AS BEING EXACT OR COMPLETE. THE CONTRACTOR MUST CALL THE APPROPRIATE UTILITY COMPANIES AT LEAST 72 HOURS BEFORE ANY EXCAVATION TO REQUEST EXACT FIELD LOCATION OF UTILITIES. IT SHALL BE THE RESPONSIBILITY OF THE CONTRACTOR TO RELOCATE ALL EXISTING UTILITIES WHICH CONFLICT WITH THE PROPOSED IMPROVEMENTS SHOWN ON THE PLANS.
7. CONTRACTOR SHALL ADJUST EXISTING VALVES, MANHOLE RIMS, ETC. AS NECESSARY TO MATCH FINISHED GRADE.
8. EXISTING CONTOUR INTERVALS ARE SHOWN AT 1 FOOT INTERVALS. CONTRACTOR SHOULD USE SPOT ELEVATIONS AND SLOPE/GRADE LABELS FOR CONSTRUCTION, WHERE PROVIDED.
9. CONTRACTOR SHALL ASSURE POSITIVE DRAINAGE AWAY FROM BUILDINGS FOR ALL NATURAL AND PAVED AREAS.
10. GRADING FOR ALL SIDEWALKS AND ACCESSIBLE ROUTES INCLUDING CROSSINGS DRIVEWAYS SHALL CONFORM TO ADA STANDARDS. SLOPES SHALL NOT EXCEED 5% LONGITUDINAL SLOPE OR 2% CROSS SLOPE. SIDEWALK ACCESS TO EXTERNAL BUILDING DOORS SHALL BE ADA COMPLIANT. CONTRACTOR SHALL NOTIFY ENGINEER IN WRITING IMMEDIATELY IF ADA CRITERIA CANNOT BE MET AT ANY LOCATION.
11. ALL ELEVATIONS SHOWN BY A "TC" SPOT ELEVATION INDICATE TOP OF CURB AND ARE 6" ABOVE THE ADJACENT PAVEMENT, UNLESS OTHERWISE NOTED.
12. ALL CUT OR FILL SLOPES SHALL BE 4:1 OR FLATTER UNLESS OTHERWISE NOTED.
13. REFER TO EROSION CONTROL PLAN, SHEET C-801, FOR EROSION CONTROL DEVICES TO BE INSTALLED PRIOR TO COMMENCING GRADING OPERATIONS.
14. ALL VEGETATION SHALL BE CLEARED AND GRUBBED FOR ALL AREAS TO BE DISTURBED.
15. THIS PLAN WAS PREPARED WITH SITE BOUNDARY, TOPOGRAPHY, UTILITY, AND ROAD INFORMATION TAKEN FROM A SURVEY PREPARED BY A LAND SURVEYOR. SEE SHEET C-101 FOR SURVEY REFERENCE.
16. THIS PLAN WAS PREPARED WITH A GEOTECHNICAL ANALYSIS PREPARED BY A GEOTECHNICAL ENGINEER. SEE SHEET C-101 FOR GEOTECHNICAL REFERENCE.

THIS PLAN TO BE UTILIZED FOR SITE GRADING PURPOSES ONLY

20 10 5 0 20
SCALE: 1" = 20'

BOHLER™

SITE CIVIL AND CONSULTING ENGINEERING
LAND SURVEYING
PROGRAM MANAGEMENT
LANDSCAPE ARCHITECTURE
SUSTAINABLE DESIGN
PERMITTING SERVICES
TRANSPORTATION SERVICES

THE BOHLER COLLECTION AND CONTENT OF THIS PLAN IS THE PROPERTY AND SHALL NOT BE COPIED OR USED FOR ANY PURPOSE WITHOUT PRIOR WRITTEN AUTHORIZATION FROM BOHLER. ONLY APPROVED, SIGNED AND SEALED PLANS SHALL BE UTILIZED FOR CONSTRUCTION PURPOSES.
© BOHLER

REVISIONS

REV	DATE	COMMENT	DRAWN BY / CHECKED BY
0	08/27/26	ISSUED FOR BID	MFR / SEL

Texas811
TEXAS
YOU MUST CALL 811 BEFORE ANY EXCAVATION
WHETHER IT'S ON PRIVATE OR PUBLIC LAND.
1-800-344-8377
www.texas811.org

PRELIMINARY

THIS DRAWING IS INTENDED FOR MUNICIPAL AND/OR AGENCY REVIEW AND APPROVAL. IT IS NOT INTENDED AS A CONSTRUCTION DOCUMENT UNLESS INDICATED OTHERWISE.

PROJECT No.:	TXA260019.00-0A
DRAWN BY:	FR
CHECKED BY:	MJH
DATE:	06/05/2026
CAD I.D.:	P-CIVL-GRAD

PROJECT:

CONSTRUCTION DOCUMENTS

FOR

EXPRESS OIL CHANGE
TIRE ENGINEERS

PROPOSED
MINOR AUTOMOTIVE REPAIR

SW CORNER OF US 380 & FM 720
CROSS ROADS, TX 76227
LOT 11R, BLOCK A

BOHLER
2600 NETWORK BLVD., SUITE 310
FRISCO, TX 75034
Phone: (469) 458-7300
TX@BohlerEng.com
TBPE NO. 18065 | TBPLS NO. 10194413

PLANS PREPARED BY
BOHLER
FOR REVIEW PURPOSES ONLY
MATHIAS J. HAUBERT
LICENSE NUMBER: 138306

SHEET TITLE:

GRADING PLAN

SHEET NUMBER:

C-401

ORG. DATE - 06/30/2026

Aug 25, 2026
P:\TX\260\TXA260019.00\CAD\DRAWINGS\PLAN SETS\CIVIL SITE PLAN\SP-CIVIL-GRAD-TXA260019.00-0A----3-LAYOUT: C-401 GRADING PLAN
MRF

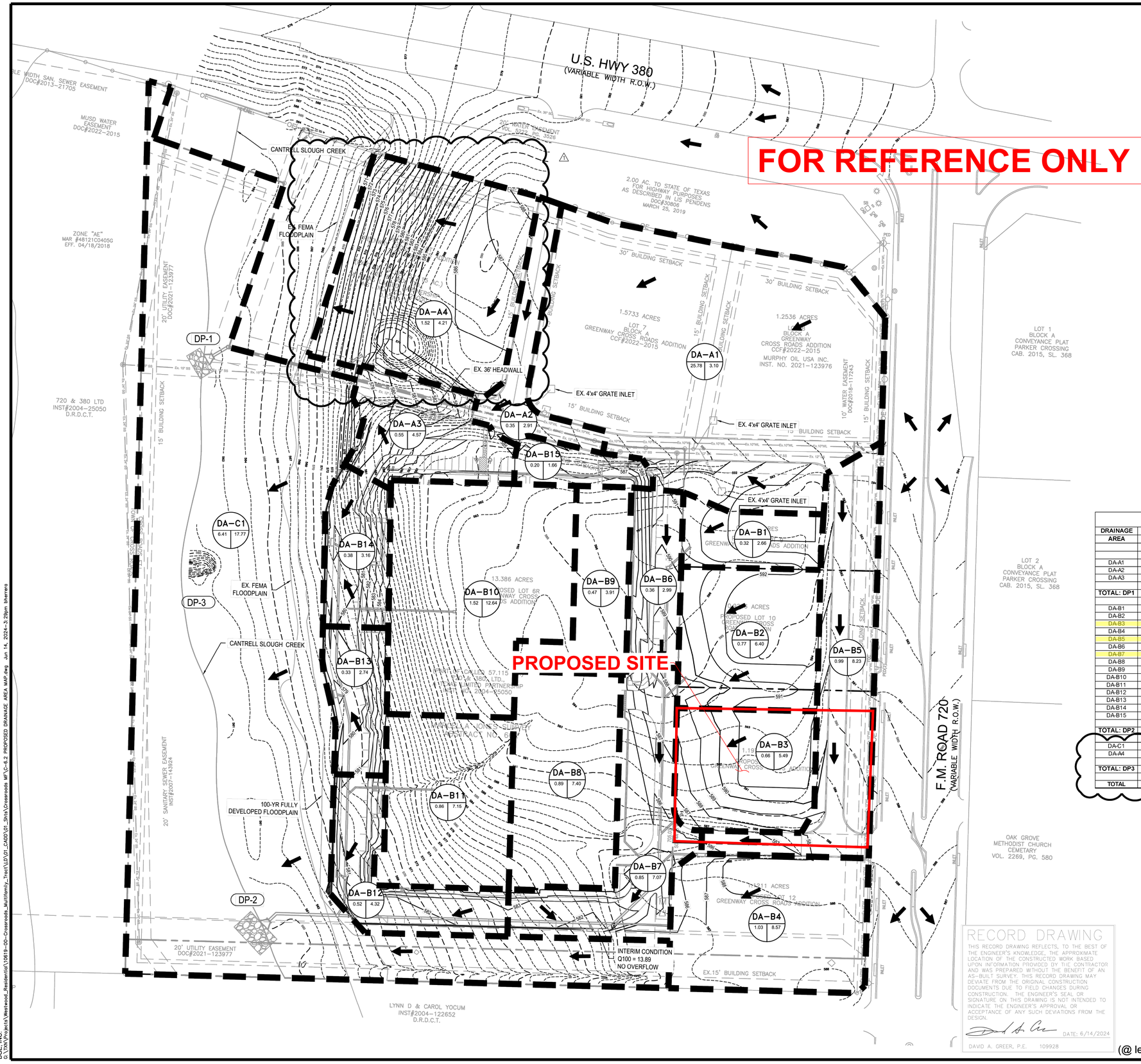

LEGEND

- PROPERTY LINE
- EXISTING CONTOUR
- EXISTING STORM LINE
- DRAINAGE AREA BOUNDARY
- DRAINAGE FLOW DIRECTION
- C3 / 0.57 / 4.48 — DRAINAGE AREA NUMBER; RUNOFF IN C.F.S.; DRAINAGE AREA IN ACRES

FLOOD NOTES:

1. ACCORDING TO THE FLOOD INSURANCE RATE MAPS (FIRM) MAP NO. 48121C0405G, DATED 04/18/2021 & LOMR 12-06-0686P EFFECTIVE 12/10/2012, PREPARED BY THE FEDERAL EMERGENCY MANAGEMENT AGENCY (FEMA) FOR COLLIN COUNTY, TEXAS, THIS PROPERTY IS WITHIN ZONE X AND PARTIALLY IN ZONE AE
2. PER BOYD HYDROLOGY FLOOD STUDY DATED 12/02/2022, THE PROPOSED CONDITIONS TO NOT CAUSE A RISE IN THE BASE FLOOD ELEVATION OF THE CANTRELL SLOUGH AND ON-SITE DETENTION IS NOT REQUIRED.

DRAINAGE DESIGN CRITERIA
RATIONAL METHOD
100 YEAR DESIGN

Q = CIA
Q - FLOW IN CUBIC FEET PER SECOND = CFS
C - RUNOFF COEFFICIENT
I - INTENSITY WITH TIME OF CONCENTRATION OF 10 MINUTES
A - DRAINAGE AREA = AREA IN ACRES

Proposed Conditions

DRAINAGE AREA	AREA (acres)	C	Tc (MIN)	I-100 (IN/HR)	Q100 (cfs)	COMMENTS
DA-A1	3.10	0.90	10	9.24	25.78	Existing Storm System
DA-A2	0.35	0.90	10	9.24	2.91	Existing Storm System
DA-A3	0.55	0.90	10	9.24	4.57	Proposed Sheet Flow
TOTAL: DP1	**4.00**				**33.26**	Relocated Outfall into Cantrell Slough
DA-B1	0.32	0.90	10	9.24	2.66	Future Storm Connection
DA-B2	0.77	0.90	10	9.24	6.40	Future Storm Connection
DA-B3	0.66	0.90	10	9.24	5.49	Future Storm Connection
DA-B4	1.03	0.90	10	9.24	8.57	Future Storm Connection
DA-B5	0.99	0.90	10	9.24	8.23	Proposed 10' Curb Inlet
DA-B6	0.36	0.90	10	9.24	2.99	Proposed 5' Curb Inlet
DA-B7	0.85	0.90	10	9.24	7.07	Proposed 15' Curb Inlet
DA-B8	0.89	0.90	10	9.24	7.40	Proposed Roof Drain Collector
DA-B9	0.47	0.90	10	9.24	3.91	Proposed Roof Drain Collector
DA-B10	1.52	0.90	10	9.24	12.64	Proposed Roof Drain Collector
DA-B11	0.86	0.90	10	9.24	7.15	Proposed Roof Drain Collector
DA-B12	0.52	0.90	10	9.24	4.32	Proposed 5' Curb Inlet
DA-B13	0.33	0.90	10	9.24	2.74	Proposed 5' Curb Inlet
DA-B14	0.38	0.90	10	9.24	3.16	Proposed 5' Curb Inlet
DA-B15	0.20	0.90	10	9.24	1.66	Proposed Landscape Drain
TOTAL: DP2	**10.15**				**84.41**	Proposed Outfall into Cantrell Slough
DA-C1	6.41	0.30	10	9.24	17.77	Existing Sheet Flow into Cantrell Slough
DA-A4	1.52	0.30	10	9.24	4.21	Existing Sheet Flow into Cantrell Slough
TOTAL: DP3	**7.93**				**17.77**	Existing Sheet Flow into Cantrell Slough
TOTAL	**22.08**				**135.44**	

PREDEVELOPMENT DRAINAGE AREA MAP (BY OTHERS)

C-402

RECORD DRAWING

THIS RECORD DRAWING REFLECTS, TO THE BEST OF THE ENGINEER'S KNOWLEDGE, THE APPROXIMATE LOCATION OF THE CONSTRUCTED WORK BASED UPON INFORMATION PROVIDED BY THE CONTRACTOR AND WAS PREPARED WITHOUT THE BENEFIT OF AN AS-BUILT SURVEY. THIS RECORD DRAWING MAY DEVIATE FROM THE ORIGINAL CONSTRUCTION DOCUMENTS DUE TO FIELD CHANGES DURING CONSTRUCTION. THE ENGINEER'S SEAL OR SIGNATURE ON THIS DRAWING IS NOT INTENDED TO INDICATE THE ENGINEER'S APPROVAL OR ACCEPTANCE OF ANY SUCH DEVIATIONS FROM THE DESIGN.

DATE: 6/14/2024

DAVID A. GREER, P.E. 109928

811

Know what's below. Call before you dig.
(@ least 48 hours prior to digging)

BENCHMARKS

BM#1
TXDOT MONUMENT GPS
N: 7131899.15
E: 2432305.32
ELEV. = 600.40'

BM#2
TXDOT MONUMENT
N: 7131769.60
E: 2432927.42
ELEV. = 580.27'

BM#3
TXDOT ROW MONUMENT
N: [redacted]
E: 2434251.25
ELEV. = 594.53'

SCALE: 1" = 20'

BGE
BGE, Inc.
777 Main St., Suite 1900
Fort Worth, TX 76102
Tel: 972-887-6130 ● www.bgeinc.com
TBPE Registration No. F-1046
Contact: David Greer
Tel: 817-872-6005

Copyright 2021

DEVELOPER

WESTWOOD RESIDENTIAL
3198 Parkwood Blvd. Suite 11076
Frisco, Texas 75034

Contact: Jeff Lindsey
Tel: 972-292-7656
jeff.lindsey@westwoodresidential.com

PROPOSED DRAINAGE AREA MAP

380 & 720 MULTIFAMILY
LOT 6R, BLOCK A
GREENWAY CROSS ROADS ADDITION

13.876 ACRES
TOWN OF CROSS ROADS ETJ
DENTON COUNTY, TEXAS

STATE OF TEXAS
DAVID A. GREER
109928
LICENSED PROFESSIONAL ENGINEER

6/14/2024
BGE, Inc.
F-1046

!!CAUTION !!
CONTRACTOR TO VERIFY EXACT LOCATION & DEPTH OF EXIST FACILITIES PRIOR TO ANY CONSTRUCTION ACTIVITIES

!! CAUTION !!
CONTACT: 1-800-DIG-TESS
48 HOURS PRIOR TO CONSTRUCTION

REVISIONS

REV NO.	DATE	DESCRIPTION
1	10/24/23	PIPE LAYOUT REVISION

DRAWN BY: BH

CHECKED BY: DAG

DATE: 06/14/24

PROJECT NUMBER: 10619-00

SHEET NO.

C-6.2

BGE, INC.
G:\TXN\Projects\Westwood_Residential\10619-00-Crossroads_Multifamily_Tract\LD\01_CADD\01_Site\Crossroads MF\C-6.2 PROPOSED DRAINAGE AREA MAP.dwg Jun 14, 2024-3:29pm bherrera

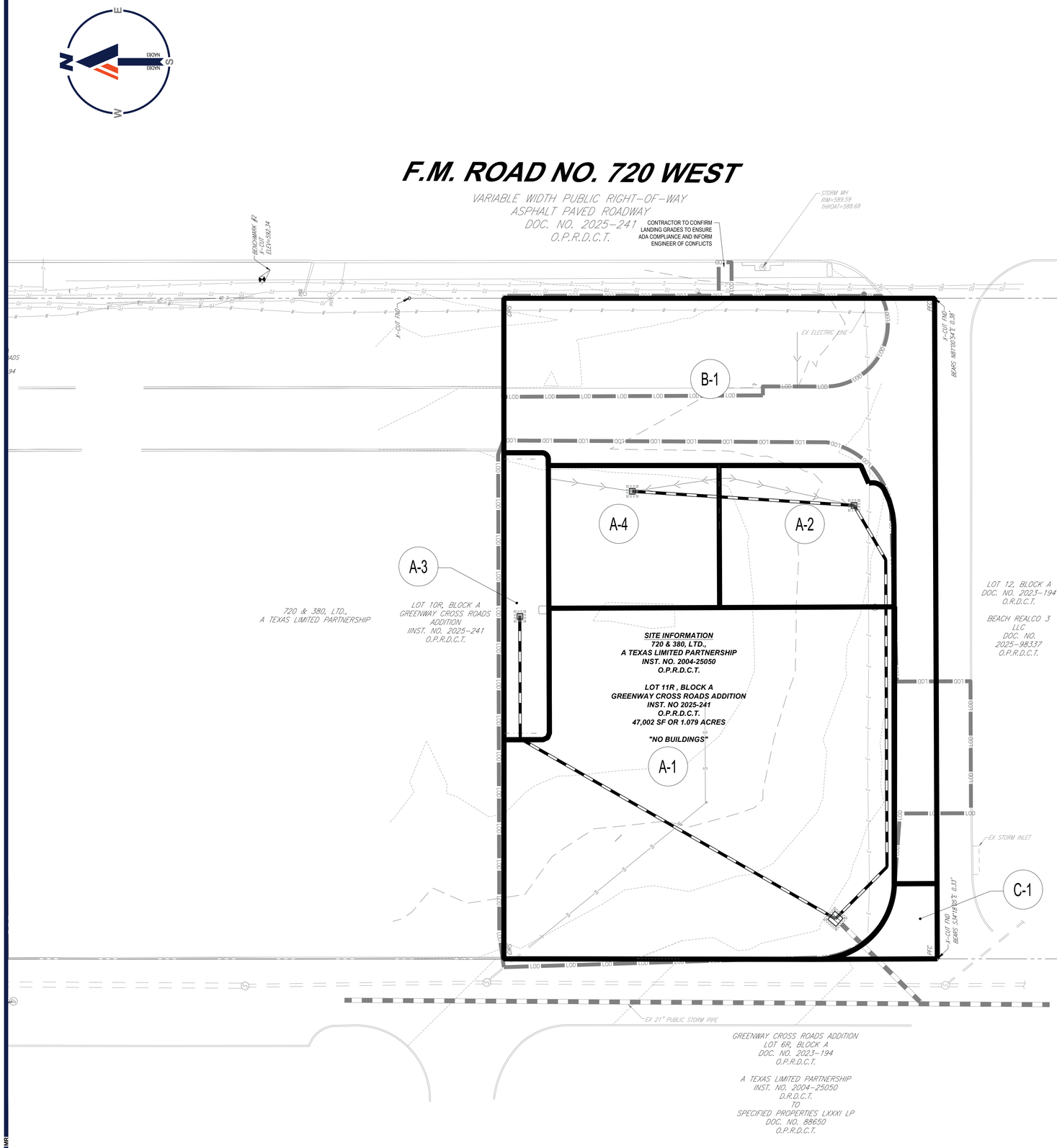

Proposed Runoff Summary

Basin Name	C	Area	Tc	I_{100}	Q_{100}	Design Point
		(Acres)	(min)	(in/hr)	(cfs)	
A-1	0.90	0.45	10.0	9.24	3.74	TO GRATE INLET A-1
A-2	0.90	0.09	10.0	9.24	0.75	TO GRATE INLET A-2
A-3	0.90	0.04	10.0	9.24	0.33	TO GRATE INLET A-3
A-4	0.90	0.08	10.0	9.24	0.67	TO GRATE INLET A-4
		0.66			4.82	TOTAL TO POINT A*
B-1	0.90	0.29	10.0	9.24	2.41	TO EXISTING CURB INLET
		0.29			2.41	TOTAL TO POINT B**
C-1	0.30	0.03	10.0	9.24	0.08	TO EXISTING CURB INLET
		0.03			0.08	TOTAL TO POINT C***

Flow rate calculated by the Rational Method (Q = CIA)

*Based on Sheet C-6.3 of the Record Drawings, the existing SD-A1-e lateral (Point A) is designed to take on a runoff of 4.82 cfs. A total of 4.82 cfs is discharging to Point A which is equal to the existing design.

**Based on Sheet C-6.3 of the Record Drawings, the existing SD-A1-d curb inlet (Point B) is designed to take on a runoff of 8.23 cfs. A total of 2.41 cfs is discharging to Point B from the subject property which is equal to the existing design for that portion of the area.

***Based on Sheet C-6.3 of the Record Drawings, the existing SD-A1-a curb inlet (Point C) is designed to take on a runoff of 7.07 cfs. A total of 0.08 cfs is discharging to Point C from the subject property which is equal to the existing design for that portion of the area.

THIS PLAN TO BE UTILIZED FOR DRAINAGE PURPOSES ONLY

20 10 5 0 20
SCALE: 1" = 20'

BOHLER™

SITE CIVIL AND CONSULTING ENGINEERING
LAND SURVEYING
PROGRAM MANAGEMENT
LANDSCAPE ARCHITECTURE
SUSTAINABLE DESIGN
PERMITTING SERVICES
TRANSPORTATION SERVICES

THE INFORMATION, DESIGN AND CONTENT OF THIS PLAN ARE PROPRIETARY AND SHALL NOT BE COPIED OR USED FOR ANY PURPOSE WITHOUT PRIOR WRITTEN AUTHORIZATION FROM BOHLER. ONLY APPROVED, SIGNED AND SEALED PLANS SHALL BE UTILIZED FOR CONSTRUCTION PURPOSES
© BOHLER

REVISIONS

REV	DATE	COMMENT	DRAWN BY / CHECKED BY
0	08/27/26	ISSUED FOR BID	MFR / SEL

TEXAS
YOU MUST CALL 811 BEFORE ANY EXCAVATION
WHETHER IT'S ON PRIVATE OR PUBLIC LAND.
1-800-344-8377
www.texas811.org

PRELIMINARY

THIS DRAWING IS INTENDED FOR MUNICIPAL AND/OR AGENCY REVIEW AND APPROVAL. IT IS NOT INTENDED AS A CONSTRUCTION DOCUMENT UNLESS INDICATED OTHERWISE.

PROJECT No.: TXA260019.00-0A
DRAWN BY: FR
CHECKED BY: MJH
DATE: 06/05/2026
CAD I.D.: P-CIVL-GRAD

PROJECT:

CONSTRUCTION DOCUMENTS

FOR

PROPOSED
MINOR AUTOMOTIVE REPAIR

SW CORNER OF US 380 & FM 720
CROSS ROADS, TX 76227
LOT 11R, BLOCK A

BOHLER
2600 NETWORK BLVD., SUITE 310
FRISCO, TX 75034
Phone: (469) 458-7300
TX@BohlerEng.com
TBPE NO. 18065 | TBPLS NO. 10194413

PLANS PREPARED BY
BOHLER
FOR REVIEW PURPOSES ONLY
MATHIAS J. HAUBERT
LICENSE NUMBER: 138306

SHEET TITLE:
POST DEVELOPMENT DRAINAGE AREA MAP

SHEET NUMBER:
C-403

ORG. DATE - 06/30/2026

Aug 25, 2026
P:\TX\3026\TXA260019.00\CAD\DRAWINGS\PLAN SETS\CIVIL SITE PLANS\P-CIVL-GRAD-TXA260019.00-0A----LAYOUT C-403 POST DEVELOPMENT DRAINAGE AREA MAP
MFR

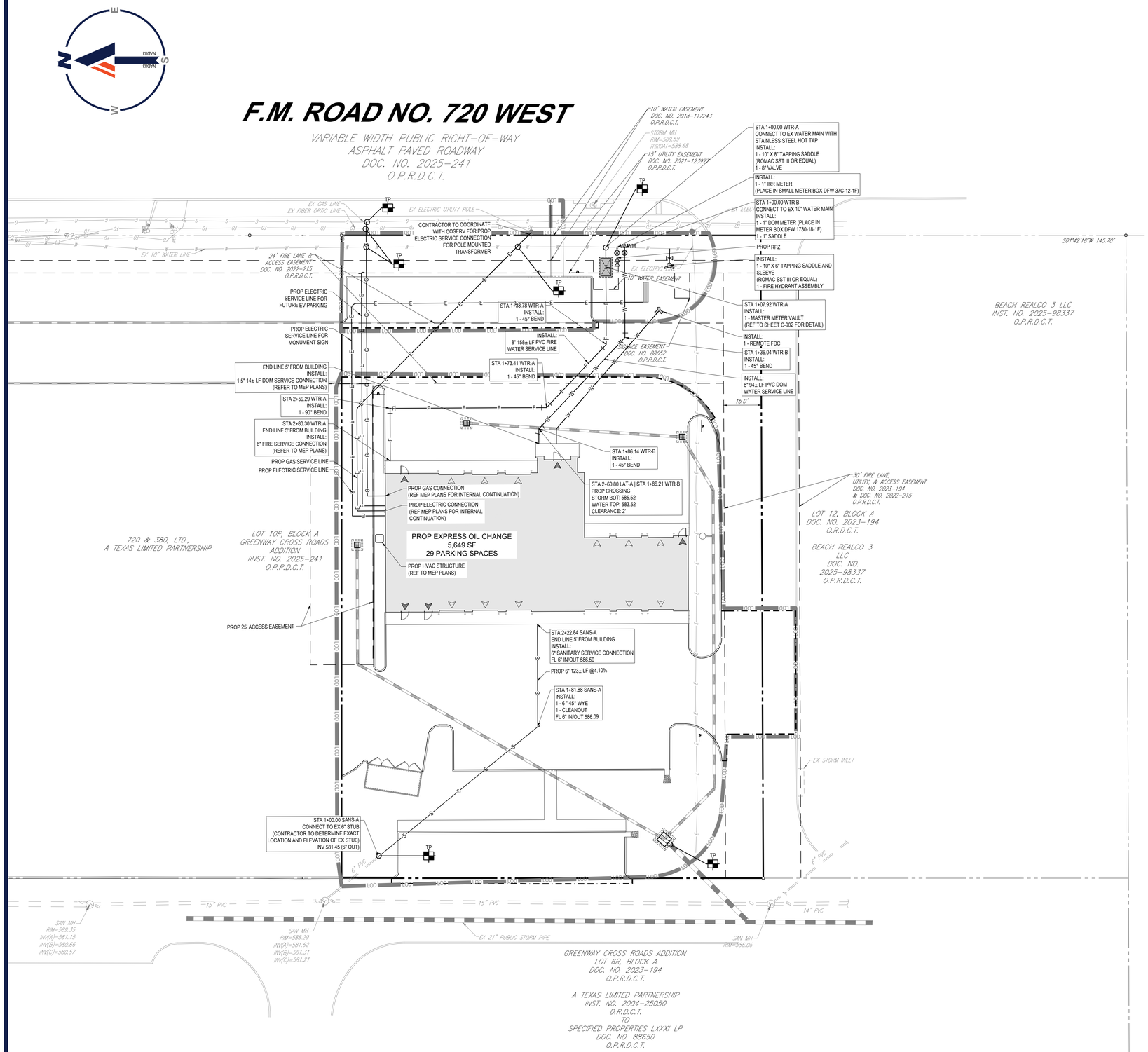

UTILITY NOTES:

1. SEE SHEET C-102 FOR GENERAL NOTES, STANDARD ABBREVIATIONS, AND STANDARD DRAWING LEGEND.
2. ALL CONSTRUCTION TO BE IN ACCORDANCE WITH THESE PLANS AND THE CITY OF SHERMAN STANDARDS AND SPECIFICATIONS. PRIOR TO STARTING CONSTRUCTION, THE CONTRACTOR SHALL MAKE CERTAIN THAT ALL REQUIRED PERMITS AND APPROVALS HAVE BEEN OBTAINED. NO CONSTRUCTION OR FABRICATION SHALL BEGIN UNTIL THE CONTRACTOR HAS RECEIVED AND THOROUGHLY REVIEWED ALL PLANS AND OTHER DOCUMENTS APPROVED BY ALL OF THE PERMITTING AUTHORITIES.
3. THE GENERAL CONTRACTOR AND ALL SUB-CONTRACTORS SHALL VERIFY THE SUITABILITY OF ALL EXISTING AND PROPOSED SITE CONDITIONS INCLUDING GRADES AND DIMENSIONS BEFORE COMMENCEMENT OF ANY CONSTRUCTION. THE ENGINEER SHALL BE NOTIFIED IN WRITING IMMEDIATELY OF ANY DISCREPANCIES.
4. THE LOCATION OF EXISTING UNDERGROUND UTILITIES AS INDICATED ON THE PLAN IS APPROXIMATE. FIELD LOCATE ALL UNDERGROUND EXISTING UTILITIES LOCATED IN THE AREA OF WORK PRIOR TO THE COMMENCEMENT OF CONSTRUCTION. CALL OKIE811 PRIOR TO CONSTRUCTION FOR ASSISTANCE IN LOCATING EXISTING UNDERGROUND UTILITIES. SUBSURFACE FEATURES ARE SHOWN IN AN APPROXIMATE LOCATION. CONTRACTOR IS RESPONSIBLE FOR SUBSURFACE UTILITY EXPLORATION TO DETERMINE UNDERGROUND UTILITY LOCATIONS AND DEPTH. UNDERGROUND UTILITY LOCATIONS SHOWN ARE TO STANDARD OF ACCURACY BASED ON UTILITY MARKOUT METHOD NOTED IN SURVEY. CONTRACTOR IS RESPONSIBLE FOR FIELD VERIFYING ANY CROSSING/CONFLICT DATE PRIOR TO STARTING CONSTRUCTION OF RELATED ADJACENT INFRASTRUCTURE.
5. THE CONTRACTOR IS SPECIFICALLY CAUTIONED THAT THE LOCATION AND/OR ELEVATION OF EXISTING UTILITIES AS SHOWN ON THESE PLANS IS BASED ON RECORDS OF THE VARIOUS UTILITY COMPANIES, AND WHERE POSSIBLE, MEASUREMENTS TAKEN IN THE FIELD. UNDERGROUND UTILITY LOCATIONS SHOWN ARE TO STANDARD OF ACCURACY BASED ON UTILITY MARKOUT METHOD NOTED IN SURVEY. THE INFORMATION IS NOT TO BE RELIED ON AS BEING EXACT OR COMPLETE. THE CONTRACTOR MUST CALL THE APPROPRIATE UTILITY COMPANIES AT LEAST 72 HOURS BEFORE ANY EXCAVATION TO REQUEST EXACT FIELD LOCATION OF UTILITIES. IT SHALL BE THE RESPONSIBILITY OF THE CONTRACTOR TO RELOCATE ALL EXISTING UTILITIES WHICH CONFLICT WITH THE PROPOSED IMPROVEMENTS SHOWN ON THE PLANS.
6. CONTRACTOR SHALL FIELD VERIFY THE LOCATION OF ALL EXISTING UTILITIES PRIOR TO THE START OF CONSTRUCTION AND NOTIFY THE ENGINEER OR RECORD IN WRITING SHOULD ANY DISCREPANCY EXIST.
7. CONTRACTOR IS RESPONSIBLE FOR COORDINATING UTILITY RELOCATIONS WHERE NECESSARY AND PROTECTING EXISTING UTILITIES (BOTH SHOWN AND UNSHOWN).
8. CONTRACTOR SHALL REPLACE, AT THEIR OWN EXPENSE, ANY EXISTING UTILITIES DAMAGED.
9. THIS PLAN WAS PREPARED WITH SITE BOUNDARY, TOPOGRAPHY, UTILITY, AND ROAD INFORMATION TAKEN FROM A SURVEY PREPARED BY A LAND SURVEYOR. SEE SHEET 1 FOR SURVEY REFERENCE.
10. REFER TO SHEETS C-901 TO C-903 FOR PIPE AND MUSTANG SUD DETAILS.

CONTRACTOR FIELD VERIFICATION NOTE:

CONTRACTOR SHALL FIELD LOCATE AND VERIFY THE HORIZONTAL AND VERTICAL LOCATION OF ALL EXISTING AND PROPOSED MUSTANG SUD UTILITIES PRIOR TO CONSTRUCTION. NO CONNECTION OR MODIFICATION TO AN EXISTING MUSTANG SUD UTILITY SHALL BE MADE WITHOUT THE PRESENCE OF A MUSTANG SUD REPRESENTATIVE.

THIS PLAN TO BE UTILIZED FOR UTILITIES PURPOSES ONLY

20 10 5 0 20

SCALE: 1" = 20'

BOHLER™

SITE CIVIL AND CONSULTING ENGINEERING
LAND SURVEYING
PROGRAM MANAGEMENT
LANDSCAPE ARCHITECTURE
ENVIRONMENTAL DESIGN
PERMITTING SERVICES
TRANSPORTATION SERVICES

THE INFORMATION, DESIGN AND CONTENT OF THIS PLAN ARE PROPRIETARY AND SHALL NOT BE COPIED OR USED FOR ANY PURPOSE WITHOUT PRIOR WRITTEN AUTHORIZATION FROM BOHLER. ONLY APPROVED, SIGNED AND SEALED PLANS SHALL BE UTILIZED FOR CONSTRUCTION PURPOSES.
© BOHLER, INC.

REVISIONS

REV	DATE	COMMENT	DRAWN BY / CHECKED BY
0	08/27/26	ISSUED FOR BID	MFR / SEL

Texas811

TEXAS
YOU MUST CALL 811 BEFORE ANY EXCAVATION
WHETHER IT'S ON PRIVATE OR PUBLIC LAND.
1-800-344-8377
www.texas811.org

PRELIMINARY

THIS DRAWING IS INTENDED FOR MUNICIPAL AND/OR AGENCY REVIEW AND APPROVAL. IT IS NOT INTENDED AS A CONSTRUCTION DOCUMENT UNLESS INDICATED OTHERWISE.

PROJECT No.:	TXA260019.00-0A
DRAWN BY:	FR
CHECKED BY:	MJH
DATE:	06/05/2026
CAD I.D.:	P-CIVIL-UTIL

PROJECT:

CONSTRUCTION DOCUMENTS

FOR

EXPRESS OIL CHANGE
TIRE ENGINEERS

PROPOSED
MINOR AUTOMOTIVE REPAIR

SW CORNER OF US 380 & FM 720
CROSS ROADS, TX 76227
LOT 11R, BLOCK A

BOHLER™
2600 NETWORK BLVD., SUITE 310
FRISCO, TX 75034
Phone: (469) 458-7300
TX@BohlerEng.com
TBPE NO. 18065 | TBPLS NO. 10194413

PLANS PREPARED BY
BOHLER™
FOR REVIEW PURPOSES ONLY
MATHAS J. HAUBERT
LICENSE NUMBER: 138306

SHEET TITLE:

UTILITY PLAN

SHEET NUMBER:

C-501

ORG. DATE - 06/30/2026

Aug 25, 2026
P:\TX\260\TXA260019.00\CAD\DRAWINGS\PLAN SETS\CIVIL SITE PLAN\SP-CIVIL-UTIL-TXA260019.00-0A----->LAYOUT: C-501 UTILITY PLAN
MFR

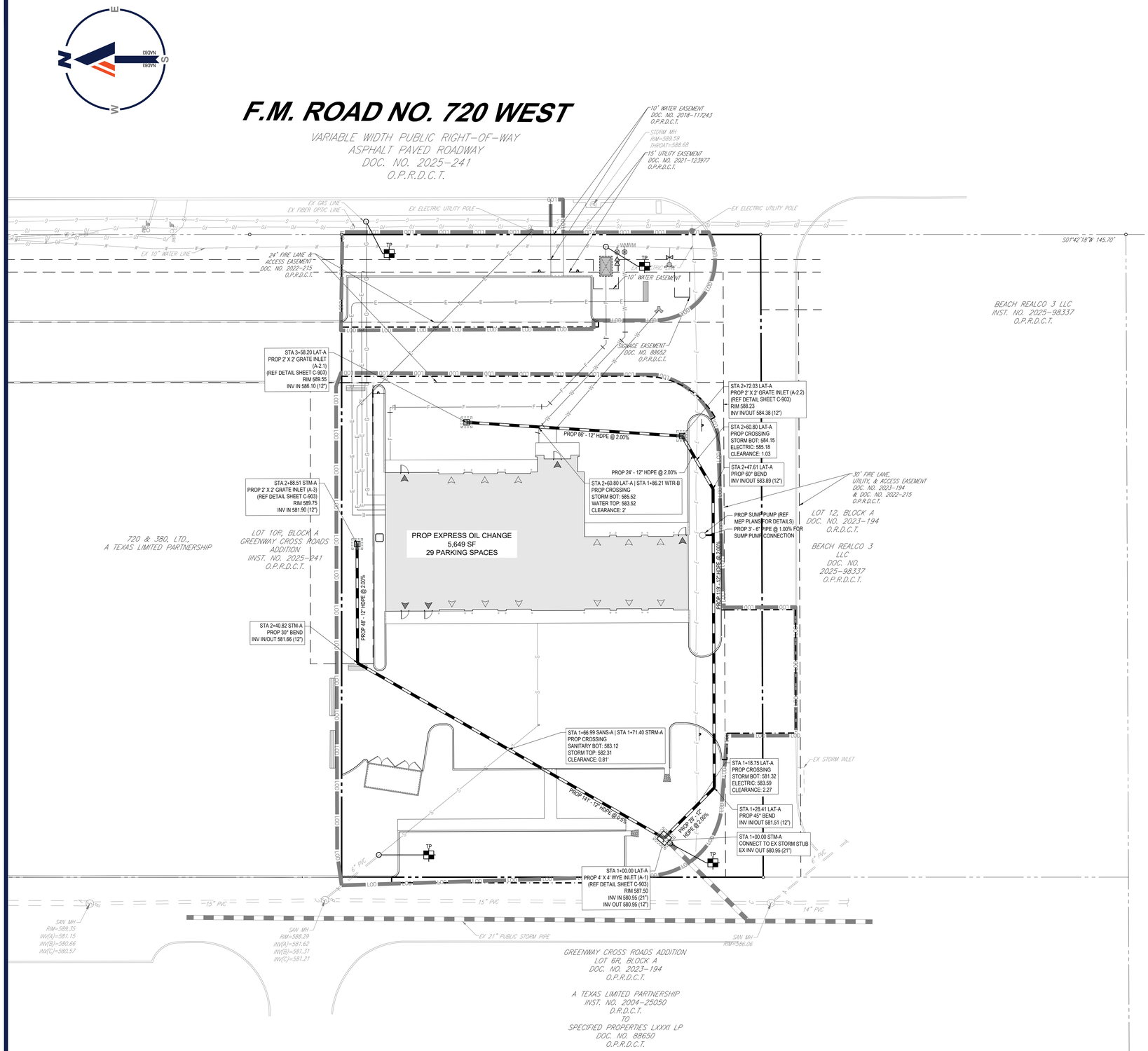

UTILITY NOTES:

1. SEE SHEET C-102 FOR GENERAL NOTES, STANDARD ABBREVIATIONS, AND STANDARD DRAWING LEGEND.
2. ALL CONSTRUCTION TO BE IN ACCORDANCE WITH THESE PLANS AND THE CITY OF SHERMAN STANDARDS AND SPECIFICATIONS. PRIOR TO STARTING CONSTRUCTION, THE CONTRACTOR SHALL MAKE CERTAIN THAT ALL REQUIRED PERMITS AND APPROVALS HAVE BEEN OBTAINED. NO CONSTRUCTION OR FABRICATION SHALL BEGIN UNTIL THE CONTRACTOR HAS RECEIVED AND THOROUGHLY REVIEWED ALL PLANS AND OTHER DOCUMENTS APPROVED BY ALL OF THE PERMITTING AUTHORITIES.
3. THE GENERAL CONTRACTOR AND ALL SUB-CONTRACTORS SHALL VERIFY THE SUITABILITY OF ALL EXISTING AND PROPOSED SITE CONDITIONS INCLUDING GRADES AND DIMENSIONS BEFORE COMMENCEMENT OF ANY CONSTRUCTION. THE ENGINEER SHALL BE NOTIFIED IN WRITING IMMEDIATELY OF ANY DISCREPANCIES.
4. THE LOCATION OF EXISTING UNDERGROUND UTILITIES AS INDICATED ON THE PLAN IS APPROXIMATE. FIELD LOCATE ALL UNDERGROUND EXISTING UTILITIES LOCATED IN THE AREA OF WORK PRIOR TO THE COMMENCEMENT OF CONSTRUCTION. CALL OKIE811 PRIOR TO CONSTRUCTION FOR ASSISTANCE IN LOCATING EXISTING UNDERGROUND UTILITIES. SUBSURFACE FEATURES ARE SHOWN IN AN APPROXIMATE LOCATION. CONTRACTOR IS RESPONSIBLE FOR SUBSURFACE UTILITY EXPLORATION TO DETERMINE UNDERGROUND UTILITY LOCATIONS AND DEPTH. UNDERGROUND UTILITY LOCATIONS SHOWN ARE TO STANDARD OF ACCURACY BASED ON UTILITY MARKOUT METHOD NOTED IN SURVEY. CONTRACTOR IS RESPONSIBLE FOR FIELD VERIFYING ANY CROSSING/CONFLICT DATE PRIOR TO STARTING CONSTRUCTION OF RELATED ADJACENT INFRASTRUCTURE.
5. THE CONTRACTOR IS SPECIFICALLY CAUTIONED THAT THE LOCATION AND/OR ELEVATION OF EXISTING UTILITIES AS SHOWN ON THESE PLANS IS BASED ON RECORDS OF THE VARIOUS UTILITY COMPANIES, AND WHERE POSSIBLE, MEASUREMENTS TAKEN IN THE FIELD. UNDERGROUND UTILITY LOCATIONS SHOWN ARE TO STANDARD OF ACCURACY BASED ON UTILITY MARKOUT METHOD NOTED IN SURVEY. THE INFORMATION IS NOT TO BE RELIED ON AS BEING EXACT OR COMPLETE. THE CONTRACTOR MUST CALL THE APPROPRIATE UTILITY COMPANIES AT LEAST 72 HOURS BEFORE ANY EXCAVATION TO REQUEST EXACT FIELD LOCATION OF UTILITIES. IT SHALL BE THE RESPONSIBILITY OF THE CONTRACTOR TO RELOCATE ALL EXISTING UTILITIES WHICH CONFLICT WITH THE PROPOSED IMPROVEMENTS SHOWN ON THE PLANS.
6. CONTRACTOR SHALL FIELD VERIFY THE LOCATION OF ALL EXISTING UTILITIES PRIOR TO THE START OF CONSTRUCTION AND NOTIFY THE ENGINEER OR RECORD IN WRITING SHOULD ANY DISCREPANCY EXIST.
7. CONTRACTOR IS RESPONSIBLE FOR COORDINATING UTILITY RELOCATIONS WHERE NECESSARY AND PROTECTING EXISTING UTILITIES (BOTH SHOWN AND UNSHOWN).
8. CONTRACTOR SHALL REPLACE, AT THEIR OWN EXPENSE, ANY EXISTING UTILITIES DAMAGED.
9. THIS PLAN WAS PREPARED WITH SITE BOUNDARY, TOPOGRAPHY, UTILITY, AND ROAD INFORMATION TAKEN FROM A SURVEY PREPARED BY A LAND SURVEYOR. SEE SHEET 1 FOR SURVEY REFERENCE.
10. REFER TO SHEETS C-901 TO C-903 FOR PIPE AND MUSTANG SUD DETAILS.

CONTRACTOR FIELD VERIFICATION NOTE:

CONTRACTOR SHALL FIELD LOCATE AND VERIFY THE HORIZONTAL AND VERTICAL LOCATION OF ALL EXISTING AND PROPOSED MUSTANG SUD UTILITIES PRIOR TO CONSTRUCTION. NO CONNECTION OR MODIFICATION TO AN EXISTING MUSTANG SUD UTILITY SHALL BE MADE WITHOUT THE PRESENCE OF A MUSTANG SUD REPRESENTATIVE.

THIS PLAN TO BE UTILIZED FOR UTILITIES PURPOSES ONLY

20 10 5 0 20
SCALE: 1" = 20'

BOHLER™
SITE CIVIL AND CONSULTING ENGINEERING
LAND SURVEYING
PROGRAM MANAGEMENT
LANDSCAPE ARCHITECTURE
SUSTAINABLE DESIGN
PERMITTING SERVICES
TRANSPORTATION SERVICES

THE BOHLER TOOL DESIGN AND CONTENT OF THIS PLAN IS THE PROPRIETARY AND OWNED BY BOHLER, AND MAY NOT BE COPIED OR USED FOR ANY PURPOSE WITHOUT PRIOR WRITTEN AUTHORIZATION FROM BOHLER. ONLY APPROVED, SIGNED AND SEALED PLANS SHALL BE UTILIZED FOR CONSTRUCTION PURPOSES. © BOHLER

REVISIONS

REV	DATE	COMMENT	DRAWN BY / CHECKED BY
0	08/27/26	ISSUED FOR BID	MFR / SEL

Texas811
TEXAS
YOU MUST CALL 811 BEFORE ANY EXCAVATION WHETHER IT'S ON PRIVATE OR PUBLIC LAND.
1-800-344-8377
www.texas811.org

PRELIMINARY

THIS DRAWING IS INTENDED FOR MUNICIPAL AND/OR AGENCY REVIEW AND APPROVAL. IT IS NOT INTENDED AS A CONSTRUCTION DOCUMENT UNLESS INDICATED OTHERWISE.

PROJECT No.:	TXA260019.00-0A
DRAWN BY:	FR
CHECKED BY:	MJH
DATE:	06/05/2026
CAD I.D.:	P-CIVL-STMS

PROJECT:

CONSTRUCTION DOCUMENTS

FOR

EXPRESS OIL CHANGE TIRE ENGINEERS

PROPOSED
MINOR AUTOMOTIVE REPAIR

SW CORNER OF US 380 & FM 720
CROSS ROADS, TX 76227
LOT 11R, BLOCK A

BOHLER™
2600 NETWORK BLVD., SUITE 310
FRISCO, TX 75034
Phone: (469) 458-7300
TX@BohlerEng.com
TBPE NO. 18065 | TBPLS NO. 10194413

PLANS PREPARED BY
BOHLER
FOR REVIEW PURPOSES ONLY
MATHIAS J. HAUBERT
LICENSE NUMBER: 136306

SHEET TITLE:

STORM SEWER PLAN

SHEET NUMBER:

C-601

ORG. DATE - 06/30/2026

Aug 25, 2026
P:\TX\026\TXA260019.00\CAD\DRAWINGS\PLAN SETS\CIVIL SITE PLANS\P-CIVL-STMS-TXA260019.00-0A----->LAYOUT: C-601 STORM PLAN
MFR

Storm Drainage Calculations

From (UpS Junction)	To (DnS Junction)	Pipe Length	Drainage Area: Incremental No. (ID)	Drainage Area: Incremental Area	Drainage Area: Total Area	Runoff "c"	Inc. cA	Total cA	Antecedent factor, f	Time of Concentration: Inlet	Time of Concentration: Travel	Time of Concentration: Total	100-year Intensity	100-year Runoff	Inlet Carryover (To Inlet)	Inlet Carryover (From Inlet)	Q pipe	Pipe Size Diameter	No. Barrels	Box Size: Width	Box Size: Height	Manning's "n"	SF	HGL: UpS	HGL: DnS	Head Loss Calculations: V_1 (in)	V_2 (out)	$V_1^2/2g$	$V_2^2/2g$	Kj	$(Kj)(V_1^2/2g)$	HL	Design HGL	T/C or Ground Elev.
Sta	Sta	ft		Acres	Acres					min.	min.	min.	in/hr	cfs	cfs	cfs	cfs	in		ft	ft		ft/ft	ft	ft	ft/s	ft/s	ft	ft		ft	ft	ft	ft
1	2	3	4	5	6	7	8	9	9a	10	11	12	13	14	15	16	17	18	18a	19	20	21	22	23	24	25	26	27	28	29	30	31	32	35
STM-A																																		
2+90.61	2+45.80	44.81	INLET A-3	0.04	0.04	0.90	0.04	0.04	1.00	10.0	1.5	11.5	9.56	0.39	0.00	0.00	0.39	12	1	N/A	N/A	0.012	0.0001	582.69	582.68	N/A	0.50	N/A	0.00	1.25	N/A	0.10	582.78	589.75
2+45.80	1+12.31	133.49	BEND	0.00	0.04	0.90	0.00	0.04	1.00	11.5	4.7	16.2	9.05	0.37	0.00	0.00	0.37	12	1	N/A	N/A	0.012	0.0001	582.60	582.58	0.50	0.47	0.00	0.00	0.25	0.00	0.10	582.68	-
1+12.31	1+00.00	12.31	INLET A-1	0.62	0.66	0.90	0.56	0.60	1.00	16.2	0.0	16.2	7.65	4.60	0.00	0.00	4.60	12	1	N/A	N/A	0.013	0.0167	582.26	582.05	0.47	5.86	0.00	0.53	1.25	0.00	0.53	582.58	587.50
1+00.00	1+00.00	0	CONN	0.00	0.66	0.90	0.00	0.60	1.00	16.2	0.0	16.2	7.65	4.60	0.00	0.00	4.60	21	1	N/A	N/A	0.013	0.0008	581.95	581.95	5.86	1.91	0.53	0.06	0.75	0.40	0.10	582.05	-
LAT-A																																		
3+58.20	2+72.03	86.17	INLET A-4	0.08	0.08	0.90	0.07	0.07	1.00	10.0	1.7	11.7	9.56	0.67	0.00	0.00	0.67	12	1	N/A	N/A	0.012	0.0003	582.28	582.25	N/A	0.85	N/A	0.01	1.25	N/A	0.10	582.35	589.55
2+72.03	2+47.61	24.42	INLET A-3	0.09	0.17	0.90	0.08	0.15	1.00	11.7	0.2	11.9	8.9786	1.35	0.00	0.00	1.35	12	1	N/A	N/A	0.012	0.0012	582.18	582.15	0.85	1.72	0.01	0.05	1.25	0.01	0.10	582.25	588.73
2+47.61	1+28.41	119.2	BEND	0.00	0.17	0.90	0.00	0.07	1.25	11.9	2.0	13.9	8.9444	0.79	0.00	0.00	0.79	12	1	N/A	N/A	0.012	0.0004	582.20	582.15	0.85	1.01	0.01	0.02	0.35	0.00	0.10	582.25	-
1+28.41	1+00.00	28.41	BEND	0.00	0.17	0.90	0.00	0.07	1.25	13.9	0.5	14.4	8.2604	0.73	0.00	0.00	0.73	12	1	N/A	N/A	0.012	0.0004	582.07	582.05	1.01	0.93	0.02	0.01	0.43	0.01	0.10	582.15	-

THIS PLAN TO BE UTILIZED FOR UTILITIES PURPOSES ONLY

20 10 5 0 20

SCALE: 1" = 20'

Aug 25, 2026
P:\TX\260\TXA260019.00\CAD\DRAWINGS\PLAN SETS\CIVIL SITE PLANS\P-CIVL-UTIL-TXA260019.00-0A----->LAYOUT: C-602 DRAINAGE CALCULATIONS
MR

BOHLER™

SITE CIVIL AND CONSULTING ENGINEERING
LAND SURVEYING
PROGRAM MANAGEMENT
LANDSCAPE ARCHITECTURE
SUSTAINABLE DESIGN
PERMITTING SERVICES
TRANSPORTATION SERVICES

THE BOHLER TOOL DESIGN AND CONTENT OF THIS PLAN IS PROPRIETARY AND SHALL NOT BE COPIED OR USED FOR ANY PURPOSE WITHOUT PRIOR WRITTEN AUTHORIZATION FROM BOHLER. ONLY APPROVED, SIGNED AND SEALED PLANS SHALL BE UTILIZED FOR CONSTRUCTION PURPOSES.
© BOHLER

REVISIONS

REV	DATE	COMMENT	DRAWN BY / CHECKED BY
0	08/27/26	ISSUED FOR BID	MFR / SEL

TEXAS
YOU MUST CALL 811 BEFORE ANY EXCAVATION WHETHER IT'S ON PRIVATE OR PUBLIC LAND.
1-800-344-8377
www.texas811.org

PRELIMINARY

THIS DRAWING IS INTENDED FOR MUNICIPAL AND/OR AGENCY REVIEW AND APPROVAL. IT IS NOT INTENDED AS A CONSTRUCTION DOCUMENT UNLESS INDICATED OTHERWISE.

PROJECT No.: TXA260019.00-0A
DRAWN BY: FR
CHECKED BY: MJH
DATE: 06/05/2026
CAD I.D.: P-CIVL-UTIL

PROJECT:

CONSTRUCTION DOCUMENTS

FOR

PROPOSED
MINOR AUTOMOTIVE REPAIR

SW CORNER OF US 380 & FM 720
CROSS ROADS, TX 76227
LOT 11R, BLOCK A

BOHLER
2600 NETWORK BLVD., SUITE 310
FRISCO, TX 75034
Phone: (469) 458-7300
TX@BohlerEng.com
TBPE NO. 18065 | TBPLS NO. 10194413

PLANS PREPARED BY
BOHLER
FOR REVIEW PURPOSES ONLY
MATHIAS J. HAUBERT
LICENSE NUMBER: 138306

SHEET TITLE:

DRAINAGE CALCULATIONS

SHEET NUMBER:

C-602

ORG. DATE - 06/30/2026

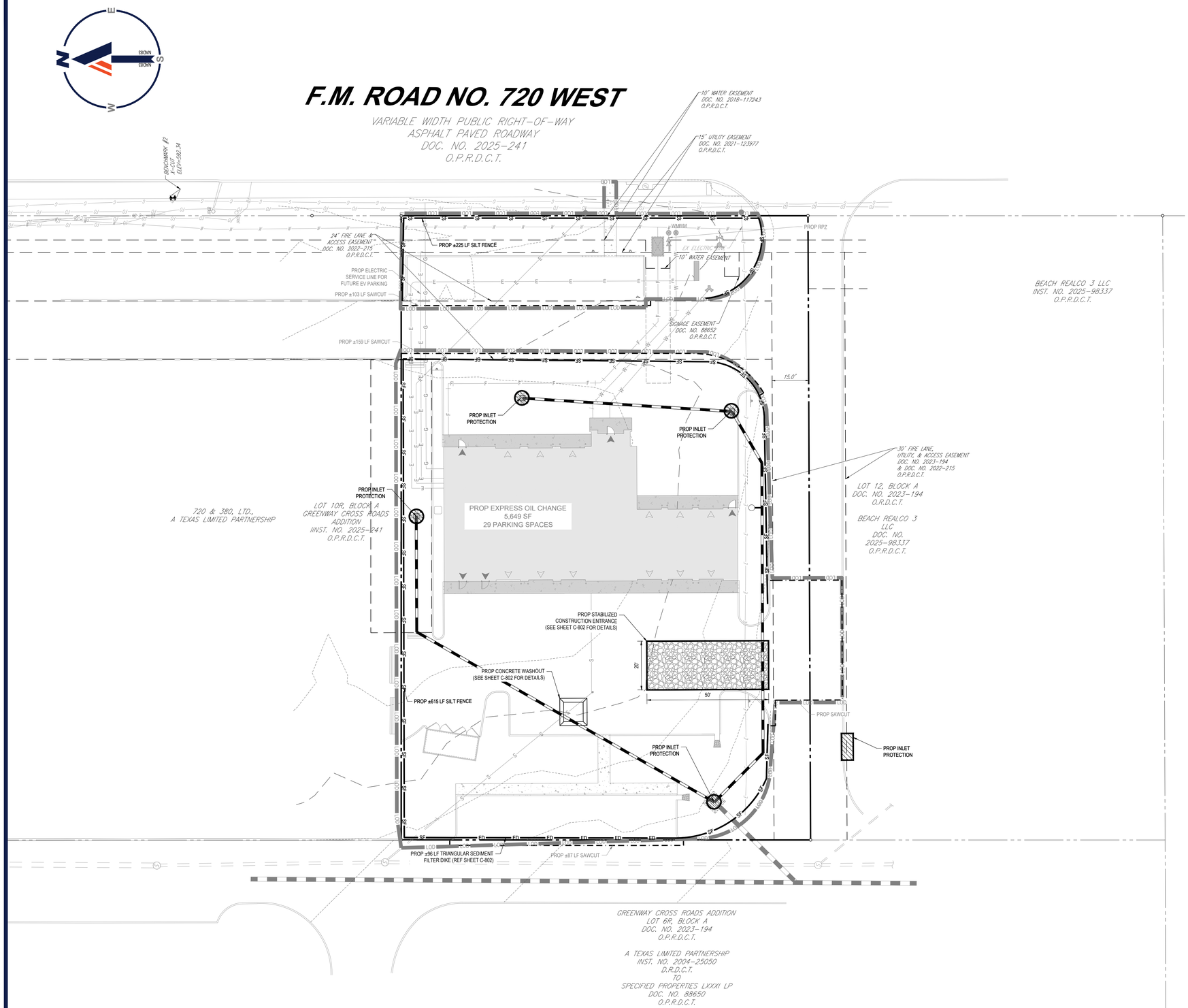

EROSION NOTES:

1. SEE SHEET C-102 FOR GENERAL NOTES, STANDARD ABBREVIATIONS, AND STANDARD DRAWING LEGEND.
2. CONTRACTOR TO INSTALL EROSION CONTROL DEVICES PRIOR TO BEGINNING CONSTRUCTION AND SHALL BE MAINTAINED THROUGHOUT THE PROJECT IN A CONDITION ACCEPTABLE TO THE CITY.
3. THE CONTRACTOR IS RESPONSIBLE FOR REMOVING SEDIMENT CONTROL DEVICES AFTER THE SITE HAS BEEN STABILIZED AND SOD OR MULCH IN PLANTED AREAS IS ESTABLISHED.
4. THE CONTRACTOR IS RESPONSIBLE FOR MAINTAINING EXISTING FILTER FABRIC & OTHER EROSION CONTROL DEVICES.

EROSION CONTROL SCHEDULE AND PHASING:

THE CONTRACTOR SHALL GENERALLY CONFORM TO THE FOLLOWING:

PHASE A - GRADING
1. CONSTRUCT TEMPORARY CONSTRUCTION EXIT ACCORDING TO THE APPROXIMATE LOCATION SHOWN ON THIS SHEET.
2. BEGIN CLEARING AND GRADING OF SITE.

PHASE B - UTILITIES
1. KEEP ALL STORM WATER POLLUTION PREVENTION MEASURES IN PLACE.
2. INSTALL SANITARY SEWER, WATER, STORMWATER, DRY UTILITIES AS SPECIFIED ON APPLICABLE PLAN SHEETS.

PHASE C - PAVING
1. KEEP ALL STORM WATER POLLUTION PREVENTION MEASURES IN PLACE. REMOVE AS NEEDED TO PAVE.
2. STABILIZE SUBGRADE.
3. PAVE STREETS, FIRE LANES, DRIVE AISLES, AND SIDEWALKS AS SPECIFIED ON PLAN SHEETS.
4. RE-INSTALL ANY STORM WATER POLLUTION PREVENTION MEASURED REMOVED FOR PAVING OPERATIONS.

PHASE D - LANDSCAPING AND SOIL STABILIZATION
1. RE-VEGETATE LOT AND PARKWAYS.
2. LANDSCAPE CONTRACTOR SHALL REVEGETATE ALL AREAS RESERVED FOR LANDSCAPE VEGETATIVE COVERS.
3. REMOVE EROSION CONTROL DEVICES WHEN GROUND COVER IS STABILIZED. VEGETATION MUST BE STABILIZED BEFORE STRUCTURAL CONTROLS REMOVED.

THIS PLAN TO BE UTILIZED FOR SOIL EROSION AND SEDIMENT CONTROL PURPOSES ONLY

20 10 5 0 20
SCALE: 1" = 20'

BOHLER™
SITE CIVIL AND CONSULTING ENGINEERING
LAND SURVEYING
PROGRAM MANAGEMENT
LANDSCAPE ARCHITECTURE
SUSTAINABLE DESIGN
PERMITTING SERVICES
TRANSPORTATION SERVICES

THE INFORMATION, DESIGN AND CONTENT OF THIS PLAN ARE PROPRIETARY AND SHALL NOT BE COPIED OR USED FOR ANY PURPOSE WITHOUT PRIOR WRITTEN AUTHORIZATION FROM BOHLER. ONLY APPROVED, SIGNED AND SEALED PLANS SHALL BE UTILIZED FOR CONSTRUCTION PURPOSES. © BOHLER

REVISIONS

REV	DATE	COMMENT	DRAWN BY / CHECKED BY
0	08/27/26	ISSUED FOR BID	MFR / SEL

Texas811
TEXAS
YOU MUST CALL 811 BEFORE ANY EXCAVATION WHETHER IT'S ON PRIVATE OR PUBLIC LAND.
1-800-344-8377
www.texas811.org

PRELIMINARY

THIS DRAWING IS INTENDED FOR MUNICIPAL AND/OR AGENCY REVIEW AND APPROVAL. IT IS NOT INTENDED AS A CONSTRUCTION DOCUMENT UNLESS INDICATED OTHERWISE.

PROJECT No.:	TXA260019.00-0A
DRAWN BY:	FR
CHECKED BY:	MJH
DATE:	06/05/2026
CAD I.D.:	P-CIVL-EROS

PROJECT:

CONSTRUCTION DOCUMENTS

FOR

EXPRESS OIL CHANGE
TIRE ENGINEERS

PROPOSED
MINOR AUTOMOTIVE REPAIR

SW CORNER OF US 380 & FM 720
CROSS ROADS, TX 76227
LOT 11R, BLOCK A

BOHLER
2600 NETWORK BLVD., SUITE 310
FRISCO, TX 75034
Phone: (469) 458-7300
TX@BohlerEng.com
TBPE NO. 18065 | TBPLS NO. 10194413

PLANS PREPARED BY
BOHLER
FOR REVIEW PURPOSES ONLY
MATHIAS J. HAUBERT
LICENSE NUMBER: 138306

SHEET TITLE:

EROSION AND SEDIMENT CONTROL PLAN

SHEET NUMBER:

C-801

ORG. DATE - 06/30/2026

Aug 25, 2026
P:\TX\20\TXA260019.00\CADD\RAWINGS\PLAN SETS\CIVIL SITE PLANS\P-CIVL-EROS-TXA260019.00-A\----\LAYOUT: C-801 EROSION AND SEDIMENT CONTROL PLAN
MKR

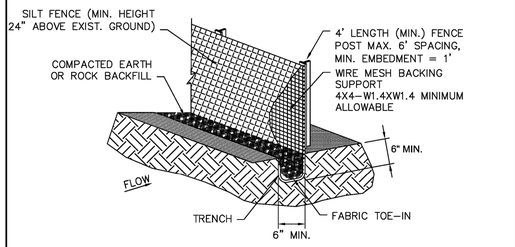

SILT FENCE

N.T.S

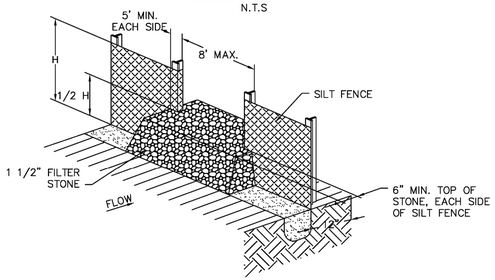

SILT FENCE OVERFLOW STRUCTURE

N.T.S

SILT FENCE	North Central Texas Council of Governments	STANDARD SPECIFICATION REFERENCE 202.5	
		DATE AUG '23	STANDARD DRAWING NO. 1020A

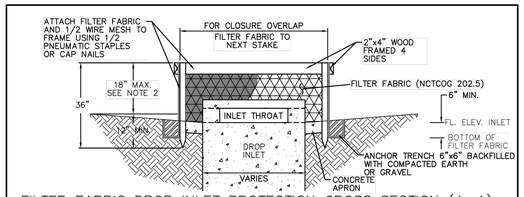

FILTER FABRIC DROP INLET PROTECTION CROSS SECTION (A–A)

N.T.S.

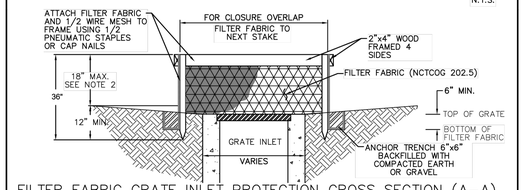

FILTER FABRIC GRATE INLET PROTECTION CROSS SECTION (A–A)

N.T.S.

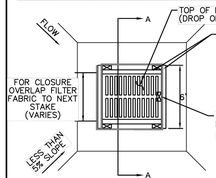

NOTES:
1. STAKES SHALL CONFORM TO SPECIFICATIONS SECTION 202.5.2.2
2. HEIGHT OF INLET PROTECTION SURROUNDING THE INLET SHALL BE SHOWN ON THE PLANS AND MUST BE CHECKED TO VERIFY PONDING WATER WILL NOT CAUSE FLOODING OF PROPERTY OR DAMAGE.
3. CONCENTRATED DITCH FLOW COMING FROM ONE OR MORE SIDES TOWARD THE INLET MAY REQUIRE A STONE OVERFLOW STRUCTURE TO BE CONSTRUCTED ON ONE SIDE OF THE INLET.
4. POST SHALL BE INSTALLED AT EACH CORNER AND BETWEEN CORNERS IF THE DISTANCE IS GREATER THAN 6' BETWEEN CORNER POSTS.

AREA INLET PROTECTION FILTER BARRIER PLAN VIEW

N.T.S.

AREA INLET PROTECTION FILTER BARRIER	North Central Texas Council of Governments	STANDARD SPECIFICATION REFERENCE 202.14	
		DATE AUG '23	STANDARD DRAWING NO. 1190

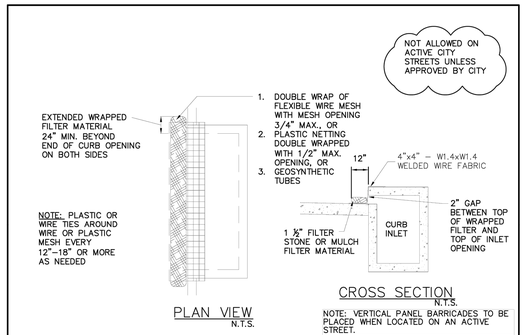

PLAN VIEW

N.T.S.

CROSS SECTION

N.T.S.

NOTE: VERTICAL PANEL BARRICADES TO BE PLACED WHEN LOCATED ON AN ACTIVE STREET.

TYPE A CURB INLET PROTECTION

N.T.S.

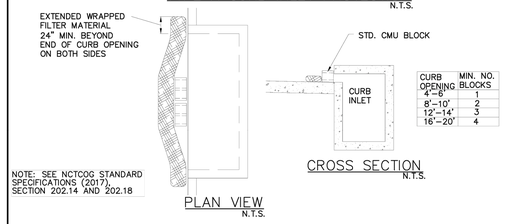

PLAN VIEW

N.T.S.

CROSS SECTION

N.T.S.

ALTERNATIVE FORM FOR TYPE A CURB INLET PROTECTION

N.T.S.

FILTER TUBE CURB INLET PROTECTION	North Central Texas Council of Governments	STANDARD SPECIFICATION REFERENCE 202.14	
		DATE AUG '23	STANDARD DRAWING NO. 1140

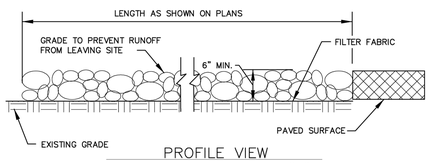

PROFILE VIEW

N.T.S.

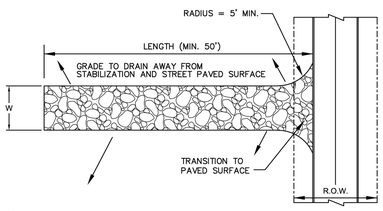

WIDTH (W)
20' MIN. FOR < 5 AC SITES
30' MIN. FOR > 5 AC SITES

PLAN VIEW

N.T.S.

EXIT MUST BE SLOPED SO THAT STORM WATER IS NOT ALLOWED TO LEAVE THE SITE AND ENTER ROADWAYS

STABILIZED CONSTRUCTION EXIT	North Central Texas Council of Governments	STANDARD SPECIFICATION REFERENCE 202.11	
		DATE AUG '23	STANDARD DRAWING NO. 1070A

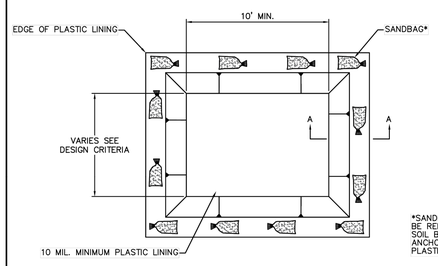

*SANDBAGS MAY BE REPLACED BY A SOIL BERM TO ANCHOR THE PLASTIC LINING.

CONCRETE WASHOUT PLAN VIEW

N.F.S

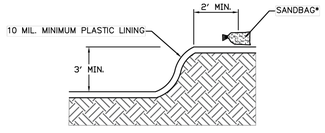

CONCRETE WASHOUT SECTION A–A

N.F.S

CONCRETE WASHOUT NOTES:

1. WASHOUT AREA MUST BE CLEARLY MARKED WITH SIGNAGE NOTING THE WASHOUT AREA.

2. WASHOUT STRUCTURES SHALL BE CLEANED OUT WHEN THE STRUCTURE IS 75% FULL. TEMPORARY CONCRETE WASHOUT FACILITY SHOULD BE MAINTAINED TO PROVIDE ADEQUATE HOLDING CAPACITY.

CONCRETE WASHOUT CONTAINMENT	North Central Texas Council of Governments	STANDARD SPECIFICATION REFERENCE N/A	
		DATE AUG '23	STANDARD DRAWING NO. 1240

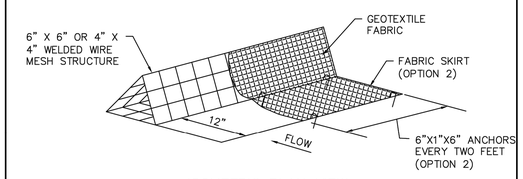

ISOMETRIC PLAN VIEW

N.T.S

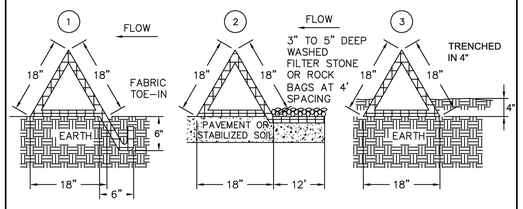

1. TOE–IN 6" MIN.
2. FABRIC SKIRT WEIGHTED WITH FILTER STONE (ROCK BAGS MAY BE SUBSTITUTED FOR FILTER STONE)
3. TRENCHED IN 4"

CROSS SECTION OF INSTALLATION OPTIONS

N.T.S

TRIANGULAR SEDIMENT FILTER DIKE	North Central Texas Council of Governments	STANDARD SPECIFICATION REFERENCE 202.8	
		DATE AUG '23	STANDARD DRAWING NO. 1050A

Aug 18, 2026
P:\TX\0261\TXA260019.00\CAD\DRAWINGS\PLAN SETS\CIVIL SITE PLANS\P-CIVL-CNDS-TXA260019.00-0A----LAYOUT: C-802 EROSION AND SEDIMENT CONTROL NOTES AND DETAILS
MFR

BOHLER™

SITE CIVIL AND CONSULTING ENGINEERING
LAND SURVEYING
PROGRAM MANAGEMENT
LANDSCAPE ARCHITECTURE
SUSTAINABLE DESIGN
PERMITTING SERVICES
TRANSPORTATION SERVICES

THE INFORMATION, DESIGN AND CONTENT OF THIS PLAN ARE PROPRIETARY AND SHALL NOT BE COPIED OR USED FOR ANY PURPOSE WITHOUT PRIOR WRITTEN AUTHORIZATION FROM BOHLER. ONLY APPROVED, SIGNED AND SEALED PLANS SHALL BE UTILIZED FOR CONSTRUCTION PURPOSES
© BOHLER, INC.

REVISIONS

REV	DATE	COMMENT	DRAWN BY / CHECKED BY
0	08/27/26	ISSUED FOR BID	MFR / SEL

Texas811

TEXAS
YOU MUST CALL 811 BEFORE ANY EXCAVATION
WHETHER IT'S ON PRIVATE OR PUBLIC LAND.
1-800-344-8377
www.texas811.org

PRELIMINARY

THIS DRAWING IS INTENDED FOR MUNICIPAL AND/OR AGENCY REVIEW AND APPROVAL. IT IS NOT INTENDED AS A CONSTRUCTION DOCUMENT UNLESS INDICATED OTHERWISE.

PROJECT No.:	TXA260019.00-0A
DRAWN BY:	FR
CHECKED BY:	MJH
DATE:	06/05/2026
CAD I.D.:	P-CIVL-CNDS

PROJECT:

CONSTRUCTION DOCUMENTS

FOR

EXPRESS OIL CHANGE / TIRE ENGINEERS

PROPOSED
MINOR AUTOMOTIVE REPAIR

SW CORNER OF US 380 & FM 720
CROSS ROADS, TX 76227
LOT 11R, BLOCK A

BOHLER™
2600 NETWORK BLVD., SUITE 310
FRISCO, TX 75034
Phone: (469) 458-7300
TX@BohlerEng.com
TBPE NO. 18065 | TBPLS NO. 10194413

PLANS PREPARED BY
BOHLER
FOR REVIEW PURPOSES ONLY
MATHIAS J. HAUBERT
LICENSE NUMBER: 138306

SHEET TITLE:

EROSION AND SEDIMENT CONTROL NOTES AND DETAILS

SHEET NUMBER:

C-802

ORG. DATE - 06/30/2026

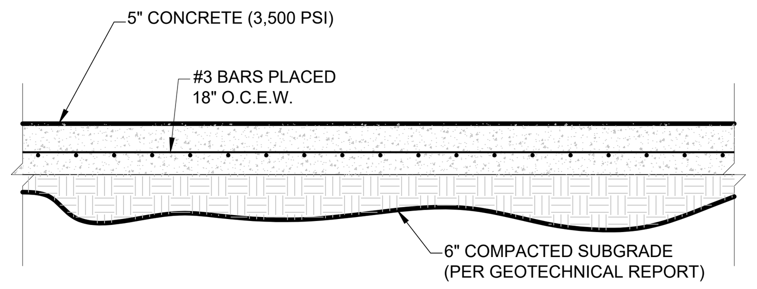

NOTE:

1. SECTION SHOWN IS BASED ON GEOTECHNICAL REPORT PREPARED BY TERRACON, ENTITLED "GEOTECHNICAL ENGINEERING REPORT," DATED 05/07/2026 (PROJECT #: 94265131).

STANDARD DUTY CONCRETE SECTION

NOT TO SCALE

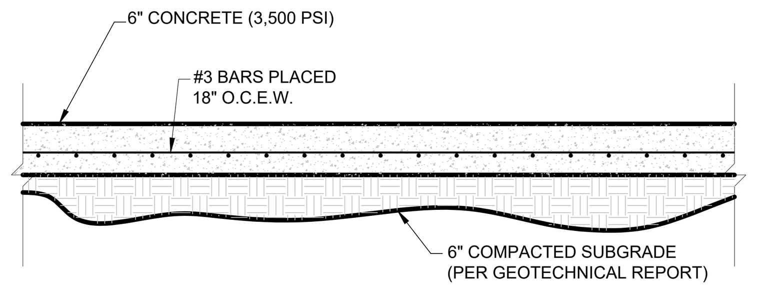

NOTE:

1. SECTION SHOWN IS BASED ON GEOTECHNICAL REPORT PREPARED BY TERRACON, ENTITLED "GEOTECHNICAL ENGINEERING REPORT," DATED 05/07/2026 (PROJECT #: 94265131).

MEDIUM DUTY CONCRETE SECTION

NOT TO SCALE

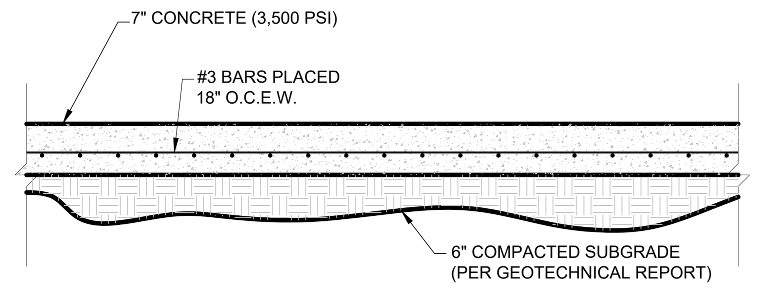

NOTE:

1. SECTION SHOWN IS BASED ON GEOTECHNICAL REPORT PREPARED BY TERRACON, ENTITLED "GEOTECHNICAL ENGINEERING REPORT," DATED 05/07/2026 (PROJECT #: 94265131).

DUMPSTER/FIRE LANE CONCRETE SECTION

NOT TO SCALE

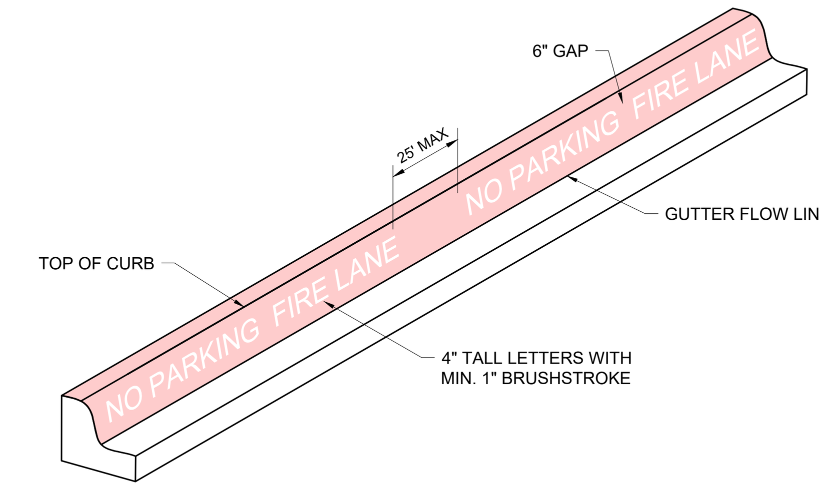

NOTE:

FIRE LANE STRIPING SHALL BE CONTINUOUSLY MARKED BY PAINTED LINES OF RED TRAFFIC PAINT SIX INCHES (6") IN WIDTH TO SHOW THE BOUNDARIES OF THE LANE. THE WORDS "NO PARKING FIRE LANE" OR "FIRE LANE NO PARKING" SHALL APPEAR IN FOUR INCH (4") WHITE LETTERS HAVING A 1" MINIMUM STROKE AT 25 FOOT (25') INTERVALS ON THE RED BORDER MARKINGS ALONG BOTH SIDES OF THE FIRE LANES. WHERE A CURB IS AVAILABLE, THE STRIPING SHALL BE ON BOTH THE HORIZONTAL AND VERTICAL FACES OF THE CURB.

FIRE LANE STRIPING

NOT TO SCALE (TX-S059901 - 01/2025)

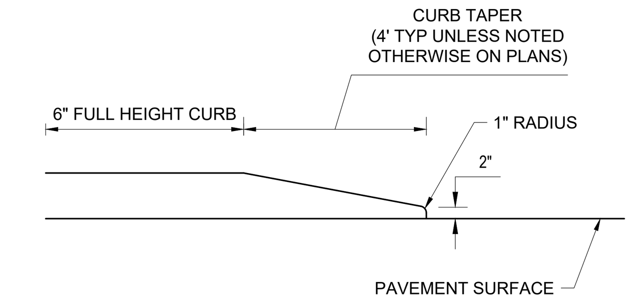

CURB TAPER

(MS-S029902-- 06/2023) NOT TO SCALE

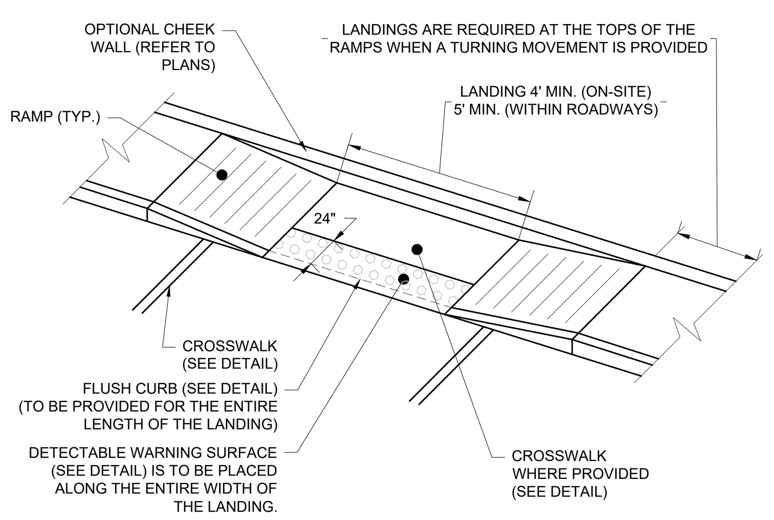

NOTE:

1. REFER TO "ACCESSIBILITY NOTES" PROVIDED HEREIN FOR ADDITIONAL REQUIREMENTS AND SPECIFICATIONS.
2. DETECTABLE WARNING SURFACES (DWS) ARE DEPICTED IN ONE OF MULTIPLE CONFIGURATIONS. THE DWS SHALL BE PLACED IN ACCORDANCE WITH APPLICABLE REQUIREMENTS.
3. THE CONFIGURATION OF THE RAMPS, LANDINGS, DWS, AND CROSSWALKS SHOWN IN THE DETAIL ARE MEANT TO DEPICT THE VARIOUS REQUIREMENTS ASSOCIATED WITH CURB RAMPS AND RELATED ELEMENTS. REFER TO THE PLANS HEREIN FOR SPECIFIC CONFIGURATIONS.
4. CURB RAMPS REQUIRE LANDINGS WHERE PEDESTRIANS PERFORM TURNING MANEUVERS.

ADA CURB RAMP - PARALLEL

NOT TO SCALE (BE-S030503 - 04/2024)

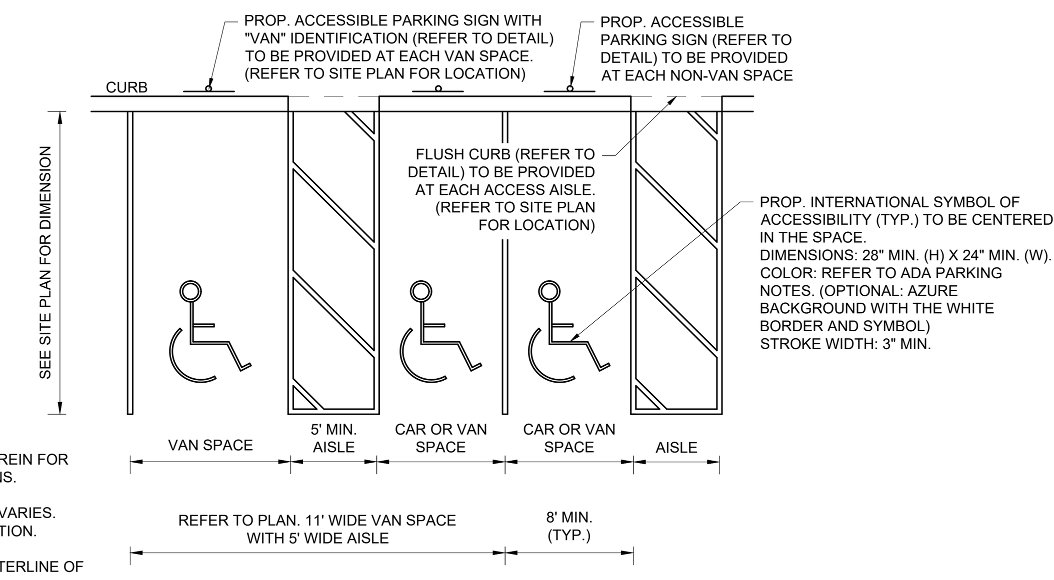

NOTE:

1. REFER TO "ACCESSIBILITY NOTES" PROVIDED HEREIN FOR ADDITIONAL REQUIREMENTS AND SPECIFICATIONS.
2. THE LAYOUT AND NUMBER OF PARKING SPACES VARIES. REFER TO PLAN FOR LOCATION AND CONFIGURATION.
3. STALL DIMENSIONS ARE MEASURED TO THE CENTERLINE OF THE PAINTED STRIPE.
4. ACCESS AISLES CAN NOT OVERLAP VEHICULAR WAYS.
5. AN ACCESS AISLE AT LEAST 5' WIDE AND AT LEAST AS LONG AS THE PARKING SPACE IS REQUIRED ON EITHER SIDE OF THE PARKING SPACE AND MUST BE MARKED TO DISCOURAGE PARKING IN IT. TWO SPACES CAN SHARE ONE AISLE.

ADA PARKING STALL MARKING

(BE-S050104 - 08/2023) NOT TO SCALE

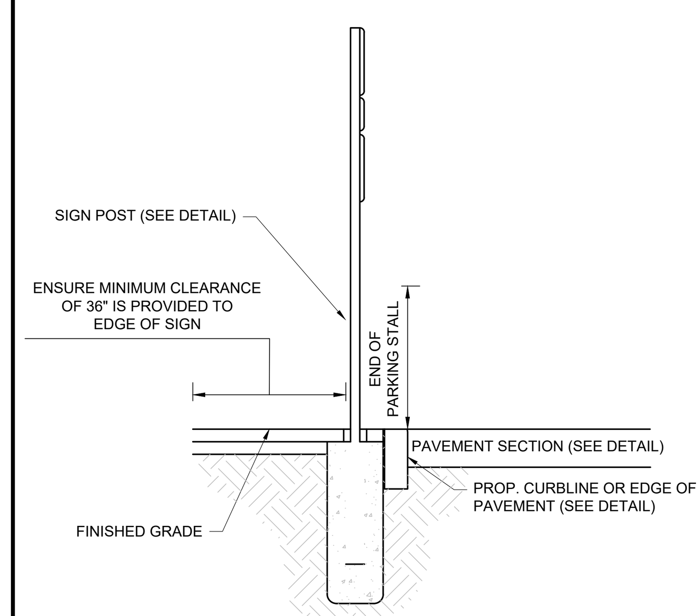

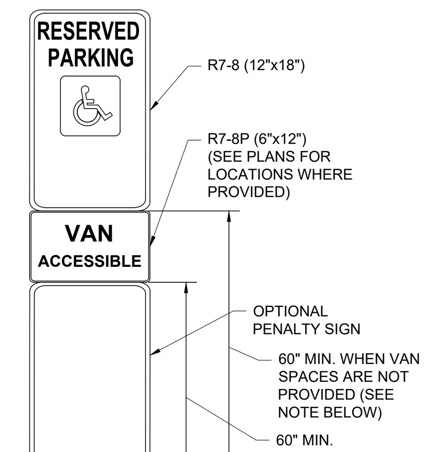

NOTES:

1. LOCATION - THE SIGN(S) MAY BE LOCATED WITHIN THE SIDEWALK (IN A PROTECTIVE STRUCTURE), MOUNTED ON A SIGN POST BEHIND THE SIDEWALK OR OTHER LOCATION BEYOND THE POTENTIAL FOR VEHICLE INTERACTION, OR MOUNTED ON A BUILDING OR OTHER STRUCTURE. REFER TO PLANS FOR LOCATIONS.
2. SIGN MOUNTING HEIGHT - A MINIMUM 60", AS MEASURED FROM FINISHED GRADE TO THE BOTTOM OF THE SIGN, SHALL BE PROVIDED. IN SITUATIONS WHERE VAN SPACES ARE PROVIDED, THE MEASUREMENT SHALL BE TO THE BOTTOM OF THE 'VAN ACCESSIBLE' (R7-8P) SIGN. WHEN NO VAN SPACES ARE PROVIDED, THE MEASUREMENT SHALL BE TO THE BOTTOM OF THE 'RESERVED PARKING' (R7-8) SIGN. IN THE CASE OF THE ADA SIGN BEING BEHIND A WALL, THIS CLEARANCE MUST BE PROVIDED IN ADDITION TO THE HEIGHT OF THE WALL. FOR UNIFORMITY, WHEN THERE IS A COMBINATION OF VAN SPACES AND NON-VAN SPACES IN ON PARKING ROW, THE TOPS OF THE 'RESERVED PARKING' (R7-8) SIGNS SHALL BE CONSISTENT.
3. 3. SIGN SPECIFICATIONS - UNLESS OTHERWISE REQUIRED BY STATE OR LOCAL REQUIREMENTS, THE R7-8 AND R7-8P SIGNS SHALL BE PER MUTCD SPECIFICATIONS. THE PENALTY SIGN SHALL BE PER STATE OR LOCAL REQUIREMENTS AND SHALL BE 12"x18".

RESERVED PARKING SIGN

(BE-S060101 - 08/2023) NOT TO SCALE

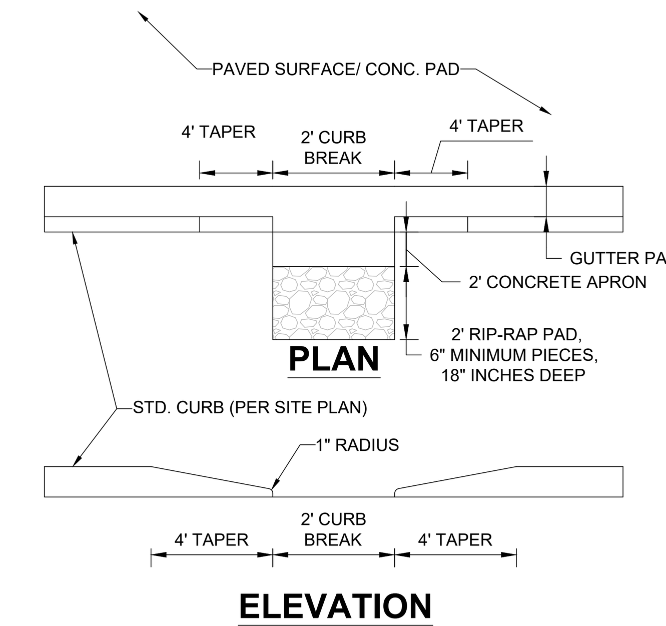

CURB BREAK DETAIL

NOT TO SCALE

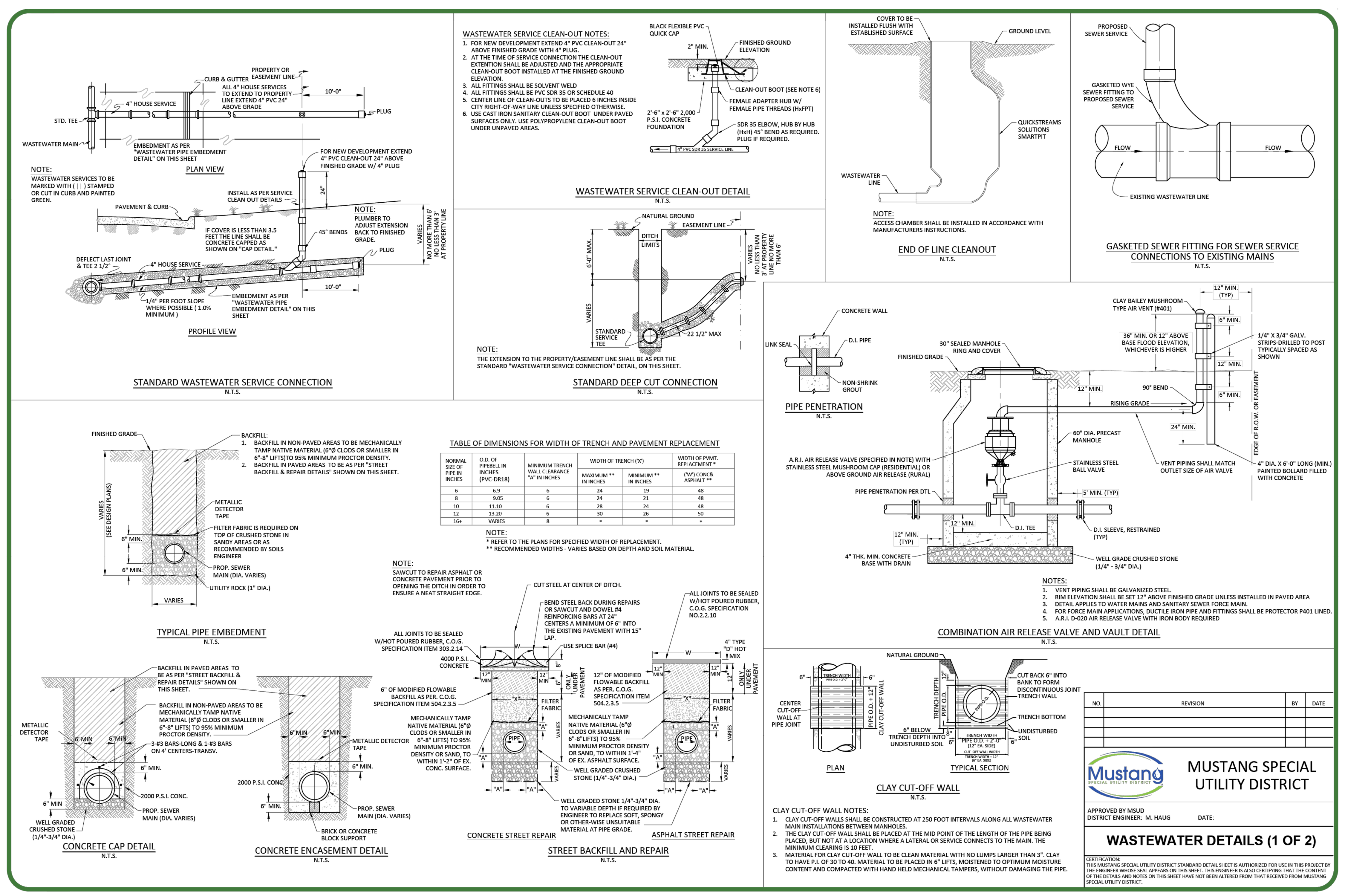

NORMAL SIZE OF PIPE IN INCHES	O.D. OF PIPEBELL IN INCHES (PVC-DR18)	MINIMUM TRENCH WALL CLEARANCE "A" IN INCHES	WIDTH OF TRENCH ('X') MAXIMUM ** IN INCHES	WIDTH OF TRENCH ('X') MINIMUM ** IN INCHES	WIDTH OF PVMT. REPLACEMENT * ('W') CONC& ASPHALT **
6	6.9	6	24	19	48
8	9.05	6	24	21	48
10	11.10	6	28	24	48
12	13.20	6	30	26	50
16+	VARIES	8	*	*	*

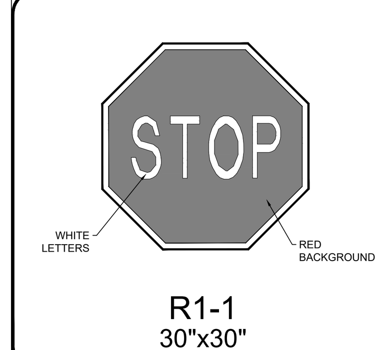

R1-1
30"x30"

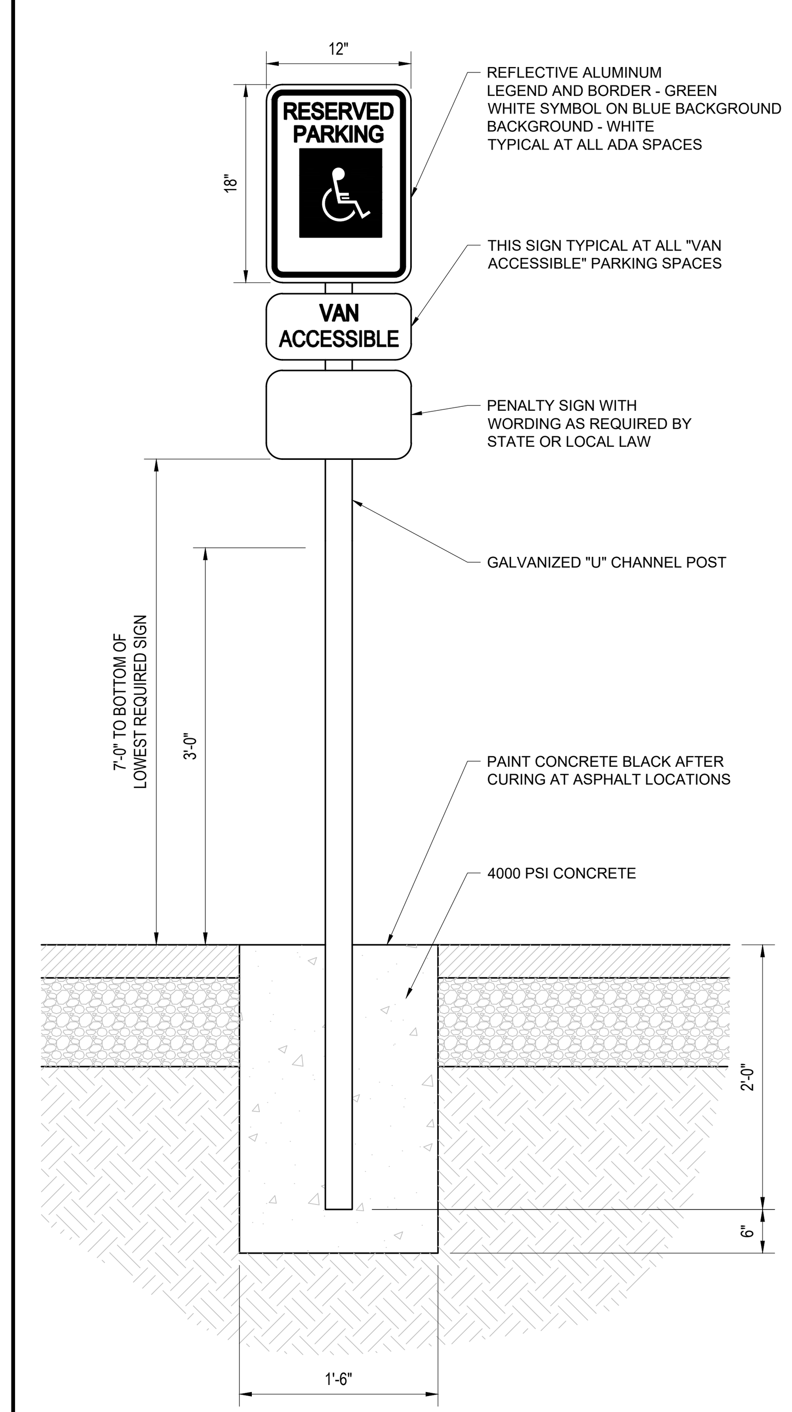

NOTES:
ONE AT EACH ADA SPACE. WHERE ADA SPACES FACE EACH OTHER WITHOUT WALKWAY, THERE SHALL BE ONE POST WITH SIGNS MOUNTED BOTH SIDES

ADA PARKING SIGN

(FL-S060101 - 09/2024) NOT TO SCALE

BOHLER//

SITE CIVIL AND CONSULTING ENGINEERING
LAND SURVEYING
PROGRAM MANAGEMENT
LANDSCAPE ARCHITECTURE
SUSTAINABLE DESIGN
PERMITTING SERVICES
TRANSPORTATION SERVICES

THE INFORMATION, DESIGN AND CONTENT OF THIS PLAN ARE PROPRIETARY AND SHALL NOT BE COPIED OR USED FOR ANY PURPOSE WITHOUT PRIOR WRITTEN AUTHORIZATION FROM BOHLER. ONLY APPROVED, SIGNED AND SEALED PLANS SHALL BE UTILIZED FOR CONSTRUCTION PURPOSES
© BOHLER

REVISIONS

REV	DATE	COMMENT	DRAWN BY / CHECKED BY
0	08/27/26	ISSUED FOR BID	MFR / SEL

TEXAS
YOU MUST CALL 811 BEFORE ANY EXCAVATION WHETHER IT'S ON PRIVATE OR PUBLIC LAND.
1-800-344-8377
www.texas811.org

PRELIMINARY

THIS DRAWING IS INTENDED FOR MUNICIPAL AND/OR AGENCY REVIEW AND APPROVAL. IT IS NOT INTENDED AS A CONSTRUCTION DOCUMENT UNLESS INDICATED OTHERWISE.

PROJECT No.:	TXA260019.00-0A
DRAWN BY:	FR
CHECKED BY:	MJH
DATE:	06/05/2026
CAD I.D.:	P-CIVL-CNDS

PROJECT:

CONSTRUCTION DOCUMENTS

FOR

EXPRESS OIL CHANGE
TIRE ENGINEERS

PROPOSED
MINOR AUTOMOTIVE REPAIR

SW CORNER OF US 380 & FM 720
CROSS ROADS, TX 76227
LOT 11R, BLOCK A

BOHLER//
2600 NETWORK BLVD., SUITE 310
FRISCO, TX 75034
Phone: (469) 458-7300
TX@BohlerEng.com
TBPE NO. 18065 | TBPLS NO. 10194413

PLANS PREPARED BY
BOHLER//
FOR REVIEW PURPOSES ONLY
MATHIAS J. HAUBERT
LICENSE NUMBER: 138306

SHEET TITLE:

CONSTRUCTION DETAILS

SHEET NUMBER:

C-901

ORG. DATE - 06/30/2026

Aug 18, 2026
P:\TX\2026\TXA260019.00\CAD\DRAWINGS\PLAN SETS\CIVIL SITE PLANS\P-CIVL-CNDS-TXA260019.00-0A------>LAYOUT: C-901 CONSTRUCTION DETAILS
MR

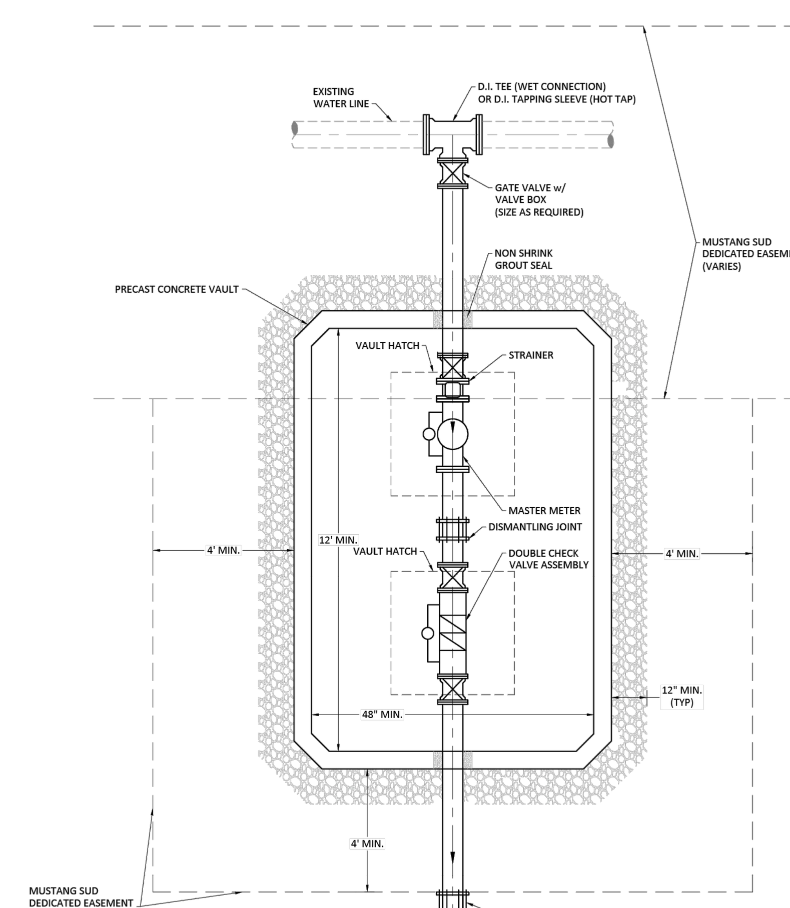

NOTES:

1. ALL WORK NOT SPECIFICALLY IDENTIFIED AS BEING SUPPLIED BY MUSTANG S.U.D. SHALL BE COMPLETED AT OWNER'S EXPENSE.
2. SIZE ON SIZE HOT TAPS SHALL NOT BE ALLOWED.
3. CONCRETE VAULTS SHALL BE EQUAL TO THAT AS DESIGNED AND MANUFACTURED BY CAPITAL PRECAST, INC.
4. CONCRETE VAULT LID AND HATCHES SHALL BE TRAFFIC RATED.
5. VAULT HATCHES SHALL BE 42"x42" ALUMINUM WITH LIFT ASSIST, SLAM LOCK AND SAFETY NET/GRATE.
6. MASTER METER SHALL BE BADGER RECORDALL.
7. MASTER METER SHALL BE EQUIPPED WITH AN AMR/AMI REMOTE METER READING SYSTEM AS MANUFACTURED BY BADGER METER COMPATIBLE FOR USE WITH THE SPECIFIED METER. THE CONTRACTOR SHALL PROVIDE ALL EQUIPMENT, ELECTRICAL AND SERVICE REQUIRED FOR A COMPLETE, OPERATING SYSTEM.
8. DOUBLE CHECK VALVE ASSEMBLY SHALL BE WATTS 775 OR APPROVED EQUAL.
9. CONCRETE VAULT SHALL HAVE NO BOTTOM.
10. VAULT SHALL BE SET ON 12" OF 1"-2"Ø WASHED GRAVEL. GRAVEL SHALL EXTEND A MINIMUM OF 24" HORIZONTALLY BEYOND THE EDGE OF THE VAULT.
11. VAULT SHALL BE MINIMUM 72" DEEP AND INCLUDE AN ALUMINUM OR STAINLESS STEEL LADDER WITH SAFETY EXTENSION.
12. VAULTS LIDS SHALL BE 6" TO 12" ABOVE FINISHED GRADE IN UNPAVED AREAS.
13. CLEARANCE BETWEEN PIPING AND VAULT FLOOR SHALL BE 12" MINIMUM.
14. ADJUSTABLE PIPE SUPPORTS SHALL BE PROVIDED UNDER THE MASTER METER AND CHECK VALVE ASSEMBLY.
15. ALL MECHANICAL JOINT FITTINGS SHALL BE MECHANICALLY RESTRAINED WITH MEGA-LUG OR EQUAL.
16. ALL PIPING THROUGH THE VAULT SHALL BE DUCTILE IRON.

MASTER METER WITH DOUBLE CHECK INSTALLATION
N.T.S.

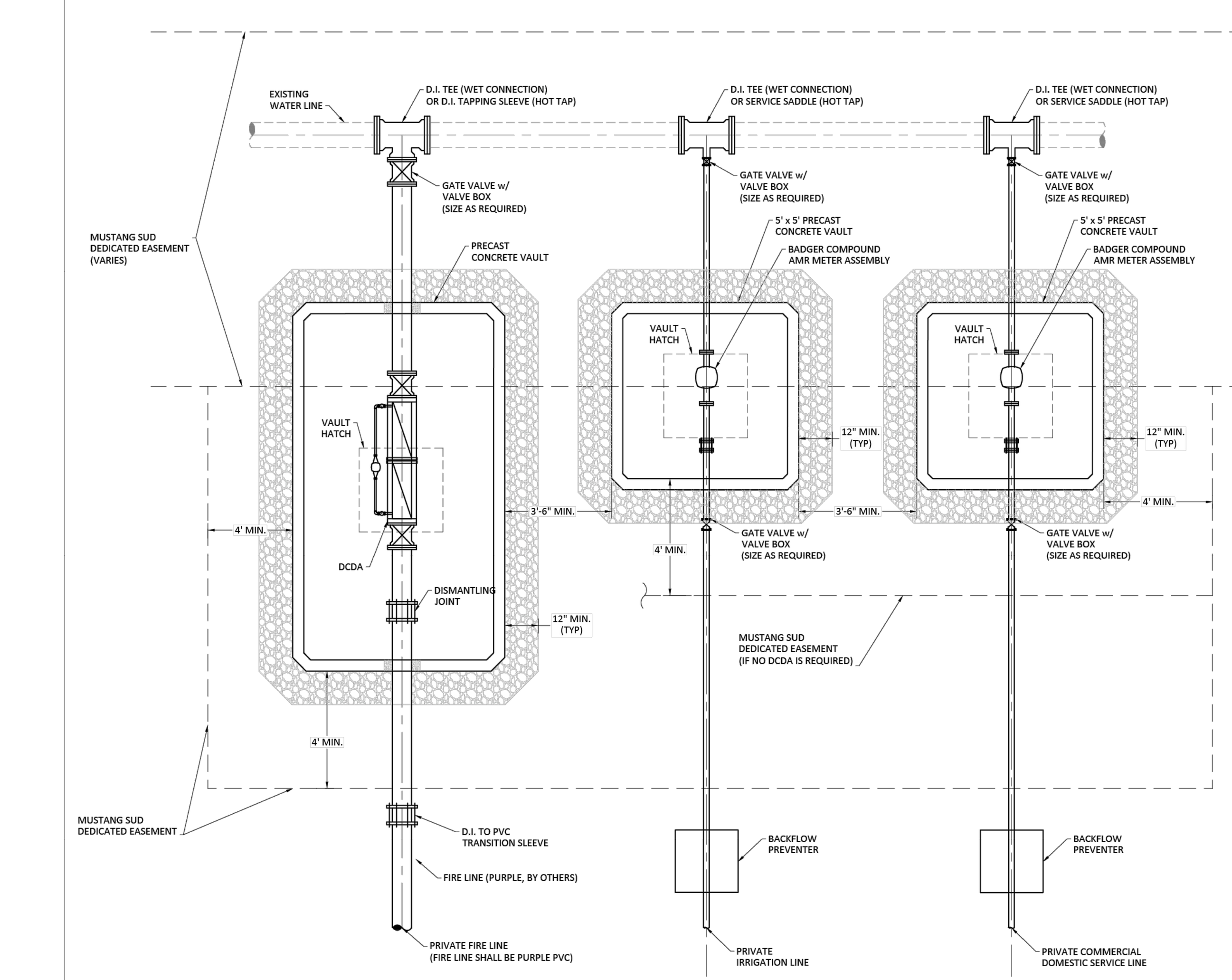

NOTES:

1. ALL WORK NOT SPECIFICALLY IDENTIFIED AS BEING SUPPLIED BY MUSTANG S.U.D. SHALL BE COMPLETED AT OWNER'S EXPENSE.
2. CONCRETE VAULTS SHALL BE EQUAL TO THAT AS DESIGNED AND MANUFACTURED BY PARKUSA.
3. VAULT SIZE MAY VARY DEPENDING UPON METER SIZE.
4. MUSTANG S.U.D. SHALL SUPPLY METERS UP TO 2".
5. MUSTANG S.U.D. SHALL SUPPLY A CHECK VALVE FOR RESIDENTIAL METERS ONLY.
6. MUSTANG S.U.D. DOES NOT SUPPLY ANY TYPE OF DOUBLE CHECK DETECTOR ASSEMBLY (DCDA).
7. DCDA SHALL BE WATTS 774 OR 757 OR APPROVED EQUAL.
8. ALL MECHANICAL JOINT FITTINGS SHALL BE MECHANICALLY RESTRAINED WITH MEGA-LUG OR EQUAL.
9. SIZE ON SIZE HOT TAPS SHALL NOT BE ALLOWED.
10. VAULT HATCHES SHALL BE 42"x42" ALUMINUM WITH LIFT ASSIST, SLAM LOCK AND SAFETY NET/GRATE.
11. VAULTS LIDS SHALL BE 6" TO 12" ABOVE FINISHED GRADE IN UNPAVED AREAS.
12. CLEARANCE BETWEEN PIPING AND VAULT FLOOR SHALL BE 12" MINIMUM.
13. DCDA VAULT SHALL BE MINIMUM 72" DEEP AND INCLUDE AN ALUMINUM OR STAINLESS STEEL LADDER WITH SAFETY EXTENSION.
14. CONCRETE VAULTS SHALL HAVE NO BOTTOM.
15. VAULT SHALL BE SET ON 12" OF 1"-2" Ø WASHED GRAVEL. GRAVEL SHALL EXTEND A MINIMUM OF 24" HORIZONTALLY BEYOND THE EDGE OF THE VAULT.
16. ALL PIPING THROUGH DCDA VAULT SHALL BE DUCTILE IRON.
17. METERS SHALL BE BADGER E-SERIES.
18. BACKFLOW PREVENTER FOR BOTH IRRIGATION AND COMMERCIAL SERVICES SHALL BE A WATTS LF 009 REDUCED PRESSURE ZONE (RPZ) ASSEMBLY. RPZ SHALL BE PLACED ABOVE GROUND WITH A MINIMUM AIR GAP BETWEEN THE RPZ DISCHARGE AND GROUND OF 1" OR 2X THE PIPE DIAMETER, WHICHEVER IS GREATER. RPZ SHALL INCLUDE AN INSULATED OR HEATED ENCLOSURE.

DOUBLE CHECK DETECTOR ASSEMBLY, IRRIGATION AND COMMERCIAL DOMESTIC METER INSTALLATION
N.T.S.

NO.	REVISION	BY	DATE

MUSTANG SPECIAL UTILITY DISTRICT

APPROVED BY MSUD
DISTRICT ENGINEER: M. HAUG DATE:

COMMERCIAL AND DCDA DETAILS

CERTIFICATION:
THIS MUSTANG SPECIAL UTILITY DISTRICT STANDARD DETAIL SHEET IS AUTHORIZED FOR USE IN THIS PROJECT BY THE ENGINEER WHOSE SEAL APPEARS ON THIS SHEET. THIS ENGINEER IS ALSO CERTIFYING THAT THE CONTENT OF THE DETAILS AND NOTES ON THIS SHEET HAVE NOT BEEN ALTERED FROM THAT RECEIVED FROM MUSTANG SPECIAL UTILITY DISTRICT.

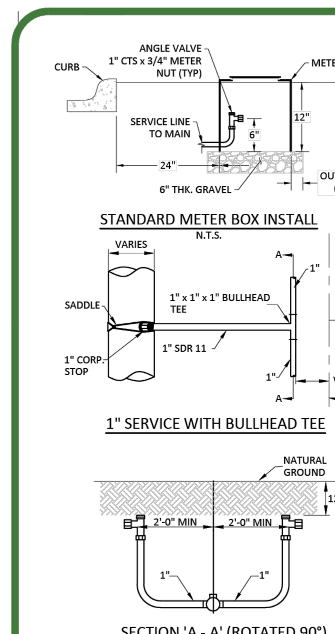

STANDARD METER BOX INSTALL
N.T.S.

1" SERVICE WITH BULLHEAD TEE

SECTION 'A - A' (ROTATED 90°)

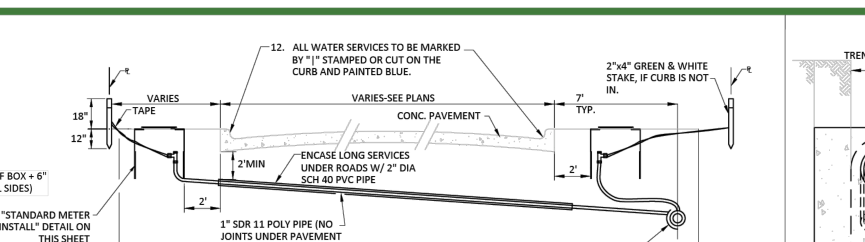

WATER SERVICE DETAIL
N.T.S.

WATER SERVICE NOTES:

1. ALL PROPERTY CORNERS SHALL BE STAKED WITH IRON RODS PRIOR TO THE INSTALLATION OF WATER SERVICES. THE LOCATIONS OF SERVICES SHALL BE STAKED ACCORDING TO THE PLANS.
2. IT IS THE RESPONSIBILITY OF THE CONTRACTOR TO FURNISH AND INSTALL THE CORPORATION STOP, WATER SERVICE PIPE, ANGLE VALVE, CONNECTOR PIPE, AND METER BOX AS PER THE DETAILS ON THIS SHEET.
3. DIRECT TAPS ARE NOT ALLOWED. STAINLESS STEEL EPOXY COATED TAP SADDLES WITH IP THREADS SHALL BE USED FOR 1" TO 2" TAPS.
5. ALL TAPS LARGER THAN 2" SHALL BE MADE USING TAPPING TEES.
6. CUTTER FOR TAPS TO BE OF THE DOUBLE SLOTTED TYPE.
7. 1" TO 2" TAPS SHALL BE A MINIMUM OF 1' APART WITH TAPS NO CLOSER THAN 1' FROM THE END OF THE PIPE.
8. HOUSE SERVICES ON COMMON LOT LINES SHALL BE 1" WITH BULLHEAD.
9. CONTRACTOR MAY USE EITHER FLARED OR COMPRESSION FITTINGS WITH RESTRAINED UNIONS.
10. NO SPLICES OF WATER SERVICES SHALL BE PERMITTED UNDER PAVEMENT.
11. METER BOX SHALL BE SET 2 FT BEHIND CURB, OUTSIDE OF DRIVEWAYS AND PAVED AREAS.
12. ALL METERS 2" ARE SUPPLIED BY MSUD.
13. SERVICE TO BE STAKED BEFORE PAVING. METER BOX TO BE STAKED AFTER PAVING.
14. ALL RESIDENTIAL METERS SHALL BE BADGER E SERIES.
15. ALL SERVICE BRASS COMPONENTS SHALL BE FORD WATER PRODUCTS (OR APPROVED EQUAL) AND 150-PSI PRESSURE RATED.
16. METER BOX REQUIREMENTS:
    - 16.1. ¾"-1" IN THE NEW STANDARD DFW37C-12-1F (METER BOX SUPPLIED AND INSTALLED BY DEVELOPER; METER SUPPLIED AND INSTALLED BY MSUD).
    - 16.2. 1.5" IN A 1730C-18-1F (METER BOX SUPPLIED AND INSTALLED BY DEVELOPER; METER SUPPLIED AND INSTALLED BY MSUD).
    - 16.3. 2"+ IN A 5X5 VAULT UNLESS SPACE IS LIMITED. (2" METER SUPPLIED BY MSUD ANYTHING LARGER BY DEVELOPER, VAULT BY DEVELOPER).

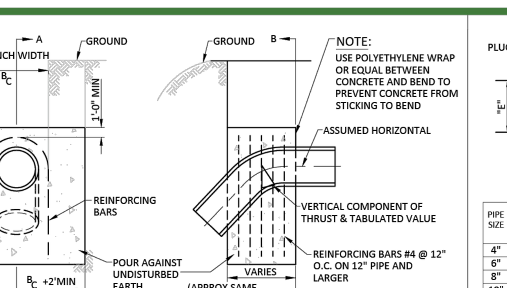

ELEVATION B-B

ELEVATION A-A

NOTE:
USE POLYETHYLENE WRAP OR EQUAL BETWEEN CONCRETE AND BEND TO PREVENT CONCRETE FROM STICKING TO BEND

Δ	11¼°	22½°	45°
I.D. (IN.)	VOL. C.Y.	VOL. C.Y.	VOL. C.Y.
4	0.3	0.5	1.0
6	0.6	1.1	2.1
8	1.0	2.0	3.6
10	1.5	2.9	5.4
12	2.1	4.2	7.7
14	2.8	5.6	10.3
16	3.7	7.2	13.3
18	4.6	9.1	16.8
20	5.7	11.1	20.6
24	8.1	15.9	29.3
30	9.3	18.3	33.9
36	13.4	26.2	48.5

VERTICAL THRUST BLOCK NOTES:

1. CALCULATIONS ARE BASED ON INTERNAL PRESSURE OF 200 P.S.I. FOR 24" I.D. PIPE AND SMALLER AND 150 P.S.I. ON 30" I.D. AND LARGER.
2. CALCULATIONS ARE BASED ON WEIGHT OF CONCRETE OF 140 LBS PER CUBIC FOOT, SAFETY FACTOR OF 1.5 AND AN ALLOWABLE SOIL BEARING VALUE OF 2,500 POUNDS PER SQUARE FOOT.
3. VOLUMES OF VERTICAL BEND THRUST BLOCKS ARE NET VOLUMES OF CONCRETE TO BE FURNISHED. THE CORRESPONDING WEIGHT OF THE CONCRETE IS EQUAL TO OR GREATER THAN THE VERTICAL COMPONENT OF THRUST ON THE VERTICAL BEND.
4. CONCRETE FOR BLOCKING SHALL BE 2500 P.S.I. CONCRETE AT 28 DAYS.
5. DIMENSIONS MAY BE VARIED AS REQUIRED BY FIELD CONDITIONS WHERE AND AS DIRECTED BY THE ENGINEER. THE VOLUME OF CONCRETE BLOCKING SHALL NOT BE LESS THAN SHOWN HERE.
6. ALL CONCRETE THRUST BLOCKS SHALL BEAR AGAINST UNDISTURBED TRENCH WALLS.
7. KEEP CONCRETE CLEAR OF ALL JOINTS & ACCESSORIES. INSTALL 12 MIL POLYETHYLENE SHEETING AROUND FITTINGS. SECURE ENDS TO PREVENT INFILTRATION OF SOIL BETWEEN SHEETING AND PIPE FITTING PRIOR TO POURING THRUST BLOCK. PROTECT MECHANICAL JOINTS, FOLLOWERS, AND BOLTS FROM CONCRETE WITH TEMPORARY FORMS AND POLYETHYLENE.
8. ALL CONCRETE THRUST BLOCKS SHALL CONSIST OF A MIXTURE OF 1:2:6 OF CEMENT TO WASHED SAND TO GRAVEL AND SHALL BE CURED A MINIMUM OF 24 HOURS.

VERTICAL THRUST BLOCKS AT FITTINGS

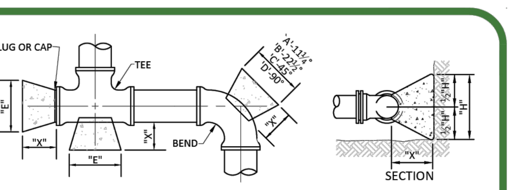

PIPE SIZE	"X" FT.	"H" FT.	11¼° "A" FT.	11¼° MIN. AREA	22½° "B" FT.	22½° MIN. AREA	45° "C" FT.	45° MIN. AREA	90° "D" FT.	90° MIN. AREA	TEE & PLUG "E" FT.	TEE & PLUG MIN. AREA
4"	1.5	1.2	1.2	1.4	1.2	1.4	1.2	1.4	1.9	2.3	1.4	1.7
6"	1.5	1.3	1.3	1.7	1.3	1.7	2.0	2.6	3.7	4.8	2.6	3.4
8"	1.5	1.3	1.3	1.7	1.8	2.3	3.4	4.4	6.3	8.2	4.5	5.9
10"	1.5	1.4	1.4	2.0	2.4	3.4	4.8	6.7	8.8	12.3	6.2	8.7
12"	1.5	1.6	1.6	2.6	3.0	4.8	5.9	9.4	10.9	17.4	7.7	12.3
14"	1.5	1.8	1.8	3.2	3.6	6.5	7.1	12.8	13.0	23.4	9.2	16.5
16"	2.0	2.1	2.1	4.4	4.0	8.4	7.8	16.4	14.5	30.5	10.2	21.4
18"	2.0	2.3	2.3	5.3	4.6	10.6	9.0	20.7	16.5	38.0	11.7	26.9
20"	2.0	2.6	2.6	6.8	5.0	13.0	9.7	25.2	18.0	46.8	12.7	33.0
24"	2.0	3.1	3.1	9.6	6.0	18.6	11.6	36.0	21.2	65.7	15.2	47.1
30"	2.5	3.8	3.8	14.4	7.5	28.5	14.6	55.5	27.0	102.6	19.1	72.6
36"	2.5	4.5	4.5	20.3	9.0	40.5	17.7	79.7	32.6	146.7	23.1	104.0

HORIZONTAL THRUST BLOCK NOTES:

1. RETAINER GLANDS OR OTHER RESTRAINING DEVICES MAY BE REQUIRED AS NEEDED.
2. CALCULATIONS ARE BASED ON A TEST PRESSURE OF 150 PSI, WEIGHT OF CONCRETE OF 140 LBS PER CUBIC FOOT, SAFETY FACTOR OF 1.5 AND AN ALLOWABLE SOIL BEARING VALUE OF 2,500 POUNDS PER SQUARE FOOT. FOR OTHER PRESSURES AND SOIL STRENGTHS, AREAS AND VOLUMES MUST BE ADJUSTED ACCORDINGLY.
3. 2500 PSI CONCRETE AT 28 DAYS SHALL BE USED FOR ALL BLOCKING.
4. ALL MINIMUM AREAS ARE IN SQUARE FEET.
5. ALL CONCRETE THRUST BLOCKS SHALL BEAR AGAINST UNDISTURBED TRENCH WALLS. THE DISTANCE FROM PIPE FITTINGS TO TRENCH WALL SHALL BE A MINIMUM OF 12" AT THRUST BLOCK.
6. KEEP CONCRETE CLEAR OF ALL JOINTS & ACCESSORIES. INSTALL 12 MIL POLYETHYLENE SHEETING AROUND FITTINGS. SECURE ENDS TO PREVENT INFILTRATION OF SOIL BETWEEN SHEETING AND PIPE FITTING PRIOR TO POURING THRUST BLOCK. PROTECT MECHANICAL JOINTS, FOLLOWERS, AND BOLTS FROM CONCRETE WITH TEMPORARY FORMS AND POLYETHYLENE.
7. ALL CONCRETE THRUST BLOCKS SHALL CONSIST OF A MIXTURE OF 1:2:6 OF CEMENT TO WASHED SAND TO GRAVEL AND SHALL BE CURED A MINIMUM OF 24 HOURS.
8. ALL JOINTS SHALL BE TEMPORARILY JACKED WHEN POURING THRUST BLOCKS.
9. CONCRETE THRUST BLOCKS SHALL APPLY TO ALL PIPE FITTINGS.

HORIZONTAL THRUST BLOCKS AT FITTINGS

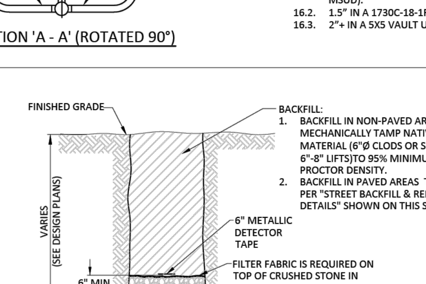

TYPICAL PIPE EMBEDMENT
N.T.S.

TABLE OF DIMENSIONS FOR WIDTH OF TRENCH AND PAVEMENT REPLACEMENT

NORMAL SIZE OF PIPE IN INCHES	O.D. OF PIPEBELL IN INCHES (PVC-DR18)	MINIMUM TRENCH WALL CLEARANCE "A" IN INCHES	WIDTH OF TRENCH ('X') MAXIMUM ** IN INCHES	WIDTH OF TRENCH ('X') MINIMUM ** IN INCHES	WIDTH OF PVMT. REPLACEMENT * ('W') CONC& ASPHALT **
6	6.9	6	24	19	48
8	9.05	6	24	21	48
10	11.10	6	28	24	48
12	13.20	6	30	26	50
16+	VARIES	8	*	*	*

NOTE:
* REFER TO THE PLANS FOR SPECIFIED WIDTH OF REPLACEMENT.
** RECOMMENDED WIDTHS - VARIES BASED ON DEPTH AND SOIL MATERIAL.

NOTE:
SAWCUT TO REPAIR ASPHALT OR CONCRETE PAVEMENT PRIOR TO OPENING THE DITCH IN ORDER TO ENSURE A NEAT STRAIGHT EDGE.

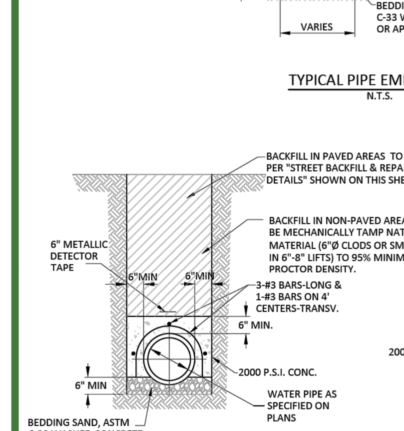

CONCRETE CAP DETAIL
N.T.S.

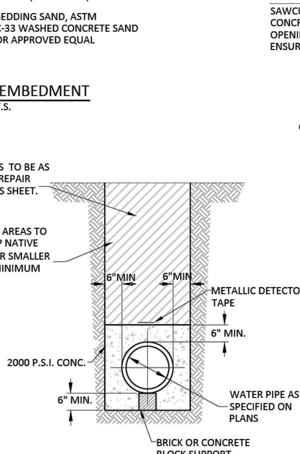

CONCRETE ENCASEMENT DETAIL
N.T.S.

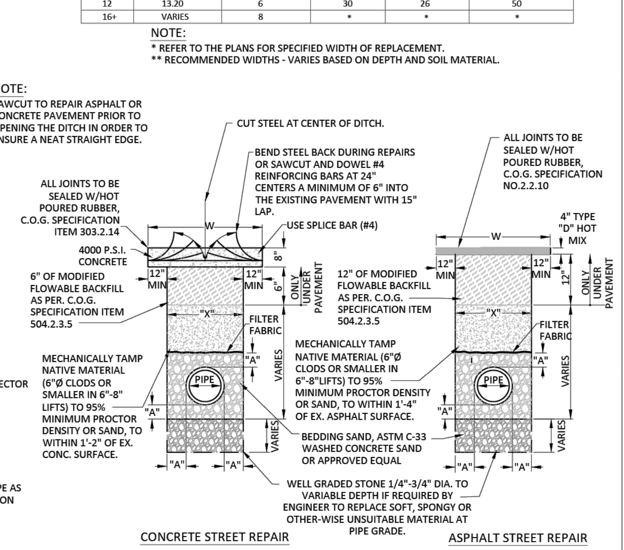

CONCRETE STREET REPAIR

ASPHALT STREET REPAIR

STREET BACKFILL AND REPAIR
N.T.S.

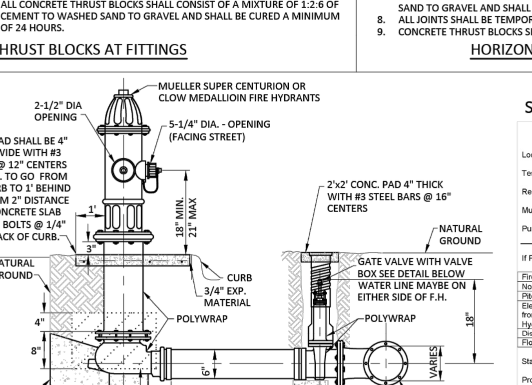

STANDARD FIRE HYDRANT DETAIL
N.T.S.

FIRE HYDRANT NOTES:

1. FIRE HYDRANTS SHALL BE LOCATED 3' OFF BACK OF CURB IN RESIDENTIAL, & 4' OFF BACK OF CURB IN INDUSTRIAL.
2. FIRE HYDRANTS SHALL BE COATED WITH KEM-LUSTRAL OR AN EQUIVALENT COATING.
3. FIRE HYDRANT LOCATION WILL BE MARKED BY PLACING A TYPE II PAVEMENT MARKER REFLECTORIZED BLUE 4" OFF OF THE TRAFFIC LANE BUTTONS. THE MARKER WILL BE IN THE LANE NEAREST TO THE FIRE HYDRANT. ALL MARKERS AT INTERSECTIONS SHOULD BE 10 FEET BACK FROM THE INTERSECTION. HYDRANT MARKERS SHOULD BE PLACED 4" OFF THE CENTER STRIPE OR OTHER TRAFFIC BUTTONS AS PER DRAWINGS.
4. FIRE HYDRANT LEAD SHALL BE NO LONGER THAN 10' IN LENGTH.
5. FIRE HYDRANT SHALL BE POWDER COATED SILVER WITH THE EXCEPTION OF THE BONNET AND CAPS, WHICH SHALL BE PRIMER COATED BASED ON FLOW.
6. FIRE HYDRANTS SHALL INCLUDE STORZ ADAPTER WITH CAP.
7. FIRE HYDRANT FLOW TESTING TO BE COMPLETED BY THIRD PARTY (NOT MUSTANG SUD).

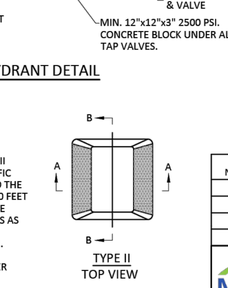

TYPE II
TOP VIEW

PAVEMENT MARKERS
(REFLECTORIZED) TYPE II

SAMPLE FIRE HYDRANT FLOW TEST REPORT

Fire Hydrant Flow Test Report (NFPA 291)

Location ______ Date ______
Test Performed By ______ Time ______ M
Representative of ______
Mustang SUD Witness ______
Purpose of Test ______

If Pumps Affect Test, Indicate Pumps Operating ______

Fire Hydrant	A_1	A_2	A_3	A_4
Nozzle Size				
Pitot Reading				
Elev. Difference from Test Hydrant (B)				
Discharge Coeff.				
Flow (gpm)				

Static B ______ psi Residual B ______ psi
Projected Results @ 20 psi Residual ______ gpm; or @ ______ psi Residual ______ gpm
Remarks ______

Location map: Show line sizes and distance to next distribution system intersection. Show valves and hydrant branch size. Indicate north. Show flowing hydrants – Label A_1, A_2, A_3, A_4. Show location of static and residual – Label B.

Indicate B Hydrant ______ Sprinkler ______ Other (identify) ______

NOTE: Mail, hand-deliver or otherwise provide this completed report to the Mustang Special Utility District prior to acceptance of the system and beginning of service.

NO.	REVISION	BY	DATE

MUSTANG SPECIAL UTILITY DISTRICT

APPROVED BY MSUD
DISTRICT ENGINEER: M. HAUG DATE:

WATER DETAILS (1 OF 2)

CERTIFICATION:
THIS MUSTANG SPECIAL UTILITY DISTRICT STANDARD DETAIL SHEET IS AUTHORIZED FOR USE IN THIS PROJECT BY THE ENGINEER WHOSE SEAL APPEARS ON THIS SHEET. THIS ENGINEER IS ALSO CERTIFYING THAT THE CONTENT OF THE DETAILS AND NOTES ON THIS SHEET HAVE NOT BEEN ALTERED FROM THAT RECEIVED FROM MUSTANG SPECIAL UTILITY DISTRICT.

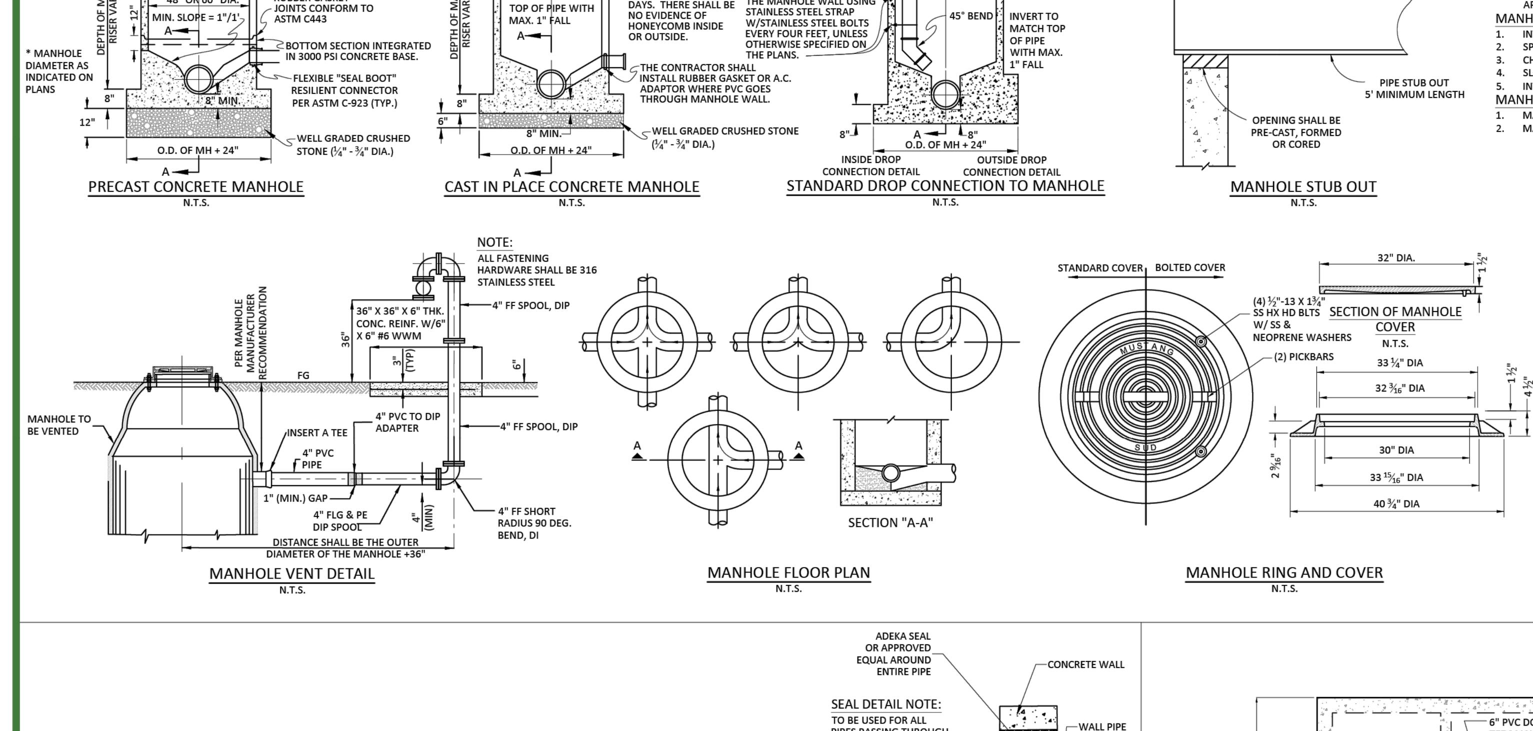

PRECAST CONCRETE MANHOLE
N.T.S.

CAST IN PLACE CONCRETE MANHOLE
N.T.S.

STANDARD DROP CONNECTION TO MANHOLE
N.T.S.

MANHOLE STUB OUT
N.T.S.

MANHOLE VENT DETAIL
N.T.S.

MANHOLE FLOOR PLAN
N.T.S.

MANHOLE RING AND COVER
N.T.S.

CONCRETE MANHOLE:

1. CONCRETE FOR ALL PRECAST AND POURED IN PLACE MANHOLES SHALL BE 6.5 SACK, 4200 P.S.I. SULPHATE RESISTANT CONCRETE.
2. THE DIAMETER OF THE CONCRETE BASE SHALL NOT BE LESS THAN THE OUTSIDE DIAMETER OF THE MANHOLE PLUS 2 FT.
3. STEPS SHALL NOT BE INSTALLED IN MANHOLE.
4. ALL NEW MANHOLES SHALL BE MARKED WITH "MH" STAMPED OR CUT IN THE CURB.
5. USE DROP CONNECTIONS WHEN CONNECTING LINE EXCEEDS 24" ABOVE THE MANHOLE FLOWLINE.
6. USE OUTSIDE DROP CONNECTIONS ON ALL NEW MANHOLES.
7. USE INSIDE DROP CONNECTION ON EXISTING MANHOLES ONLY.
8. PROVIDE RAIN PANS INTEGRATED WITH RIM.
9. MANHOLES IN OFFSITE/UNPAVED AREAS SHALL BE SET WITH TOP OF MANHOLE 12" ABOVE FINISHED GRADE (CANNOT BE ACHIEVED WITH GRADE RINGS).
10. MANHOLES IN OFFSITE AREAS SHALL HAVE SEALED RING AND COVER AND MAINTAIN MINIMUM 12" CLEARANCE WITHOUT GRADE RINGS.
11. EXTERIOR MANHOLE JOINTS SHALL BE SEALED WITH GATOR WRAP.
12. ALL PRIVATE AND PUBLIC MANHOLES SHALL BE COATED WITH SPRAYWALL SELF-PRIMING POLYURETHANE. MANHOLE PREPARATION AND PRODUCT APPLICATION SHALL BE IN ACCORDANCE WITH MANUFACTURER SPECIFICATIONS.

MANHOLE INVERT:

1. INVERT CHANNELS TO BE CONSTRUCTED FOR SMOOTH FLOW WITH NO OBSTRUCTIONS.
2. SPILLWAYS SHALL BE CONSTRUCTED BETWEEN PIPES WITH DIFFERENT INVERT ELEVATIONS PROVIDING FOR SMOOTH FLOW.
3. CHANNELS FOR FUTURE CONSTRUCTIONS (STUBS) SHALL BE CONSTRUCTED, FILLED WITH SAND, AND COVERED WITH 1" OF MORTAR.
4. SLOPE MANHOLE ITSELF WITH A 1:2 SLOPE FROM MANHOLE WALL TO CHANNEL.
5. INVERT SHALL BE A MINIMUM OF 1/2 THE DIAMETER OF THE LARGEST PIPE OR 4" DEEP.

MANHOLE RING AND COVER:

1. MANHOLE LIDS SHALL HAVE PICK SLOTS ONLY.
2. MANHOLE RING & COVERS SHALL BE HEAVY DUTY LOAD RATED CONFORMING TO AASHTO M-306.

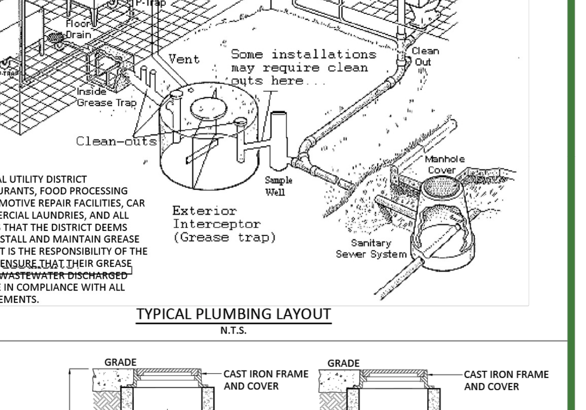

NOTE:
MUSTANG SPECIAL UTILITY DISTRICT REQUIRES RESTAURANTS, FOOD PROCESSING FACILITIES, AUTOMOTIVE REPAIR FACILITIES, CAR WASHES, COMMERCIAL LAUNDRIES, AND ALL OTHER FACILITIES THAT THE DISTRICT DEEMS NECESSARY TO INSTALL AND MAINTAIN GREASE OR GRIT TRAPS. IT IS THE RESPONSIBILITY OF THE GENERATORS TO ENSURE THAT THEIR GREASE TRAPS, AND THE WASTEWATER DISCHARGED FROM THEM, ARE IN COMPLIANCE WITH ALL DISTRICT REQUIREMENTS.

TYPICAL PLUMBING LAYOUT
N.T.S.

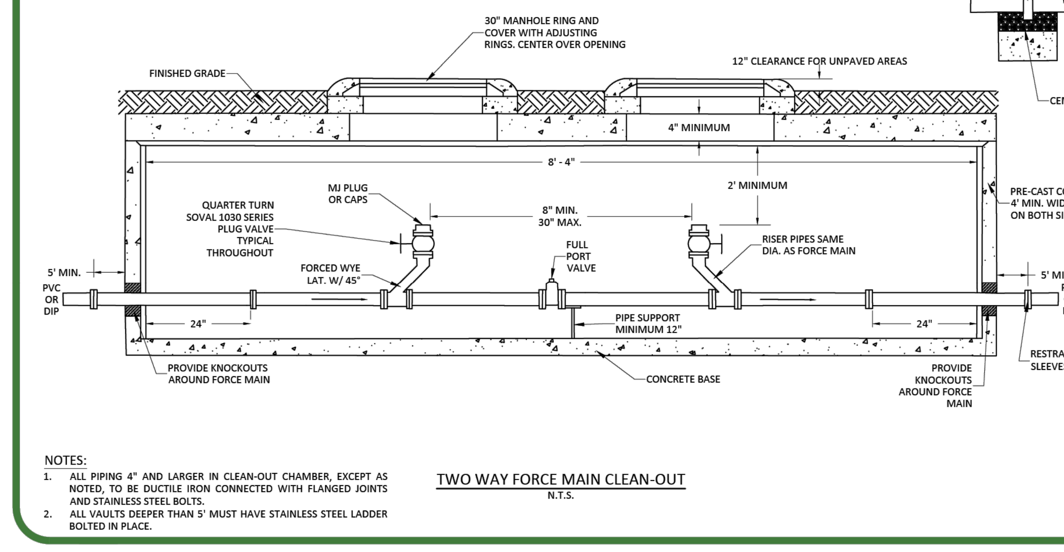

NOTES:

1. ALL PIPING 4" AND LARGER IN CLEAN-OUT CHAMBER, EXCEPT AS NOTED, TO BE DUCTILE IRON CONNECTED WITH FLANGED JOINTS AND STAINLESS STEEL BOLTS.
2. ALL VAULTS DEEPER THAN 5' MUST HAVE STAINLESS STEEL LADDER BOLTED IN PLACE.

TWO WAY FORCE MAIN CLEAN-OUT
N.T.S.

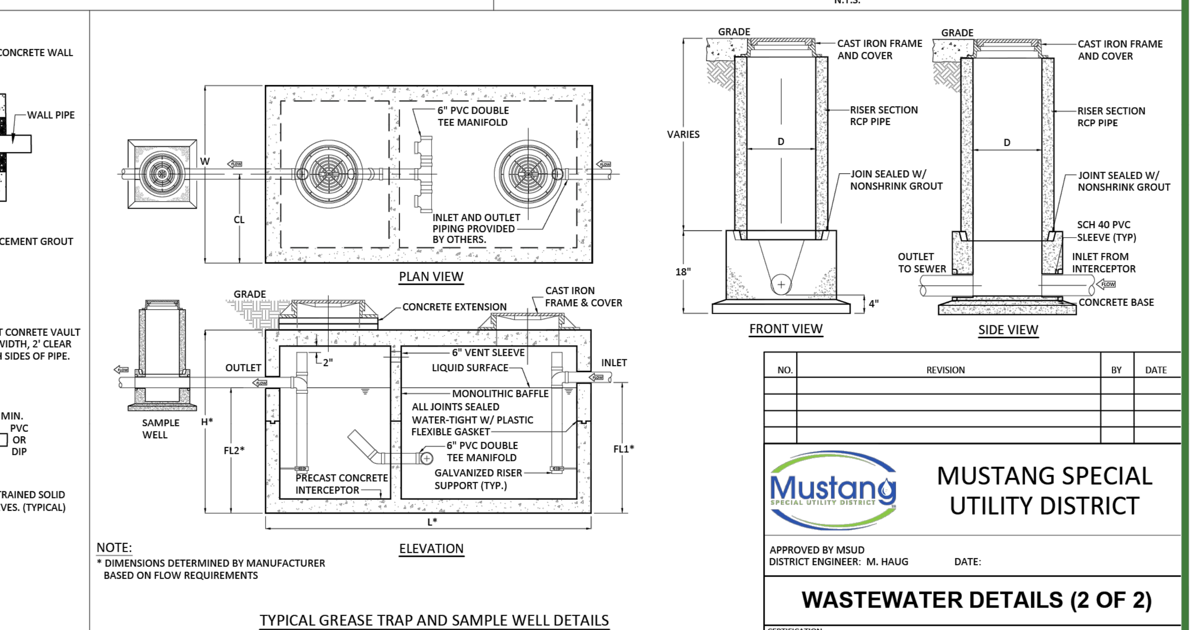

NOTE:
* DIMENSIONS DETERMINED BY MANUFACTURER BASED ON FLOW REQUIREMENTS

TYPICAL GREASE TRAP AND SAMPLE WELL DETAILS
N.T.S.

NO.	REVISION	BY	DATE

MUSTANG SPECIAL UTILITY DISTRICT

APPROVED BY MSUD
DISTRICT ENGINEER: M. HAUG DATE:

WASTEWATER DETAILS (2 OF 2)

CERTIFICATION:
THIS MUSTANG SPECIAL UTILITY DISTRICT STANDARD DETAIL SHEET IS AUTHORIZED FOR USE IN THIS PROJECT BY THE ENGINEER WHOSE SEAL APPEARS ON THIS SHEET. THIS ENGINEER IS ALSO CERTIFYING THAT THE CONTENT OF THE DETAILS AND NOTES ON THIS SHEET HAVE NOT BEEN ALTERED FROM THAT RECEIVED FROM MUSTANG SPECIAL UTILITY DISTRICT.

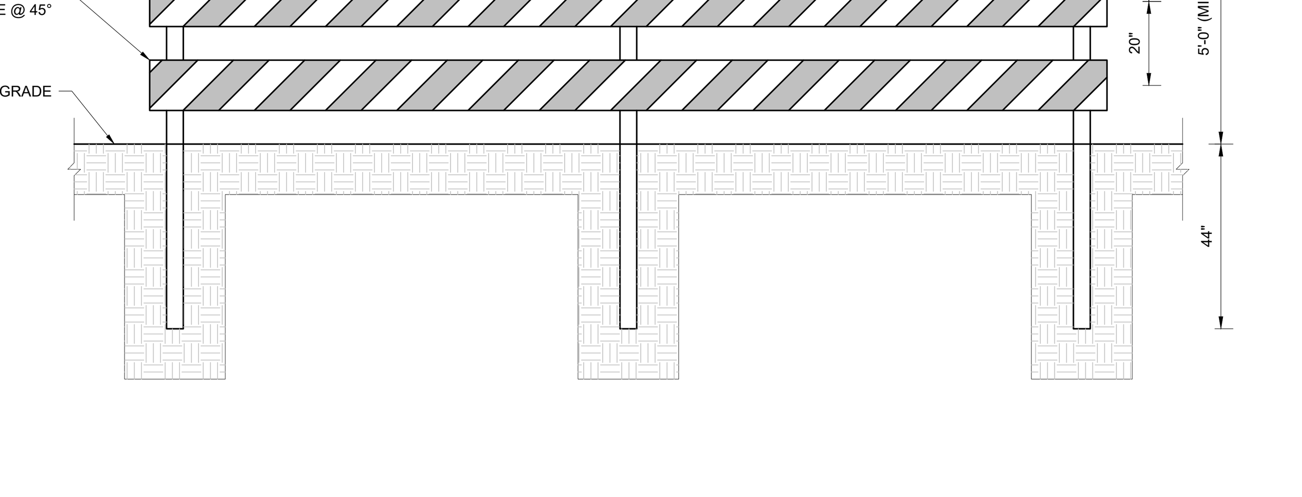

NOTES:

1) SEE PLAN VIEW FOR TRAFFIC BARRIER LOCATION(S). DETAIL IS INTENDED FOR USE ON PRIVATE PROPERTY ONLY.
2) POSTS AND PLANKS SHALL BE PRESSURE TREATED LUMBER.
3) PLANKS SHALL BE PAINTED COMPLETELY WHITE. POSTS SHALL BE PAINTED WHITE ON ALL SIDES TO WITHIN SIX INCHES (6 IN.) OF THE GROUND LEVEL.
4) GOOD QUALITY OIL BASE EXTERIOR GRADE PAINT MUST BE USED. SIX INCH (6 IN.) HIGH INTENSITY REFLECTIVE ORANGE AND WHITE STRIPE TAPE ON ONE SIDE FOR THE FULL LENGTH OF THE BARRICADE.
5) EACH PLANK SHALL BE SECURED TO EACH POST WITH (2)-$\frac{3}{8}$ IN. X 6-$\frac{1}{2}$ IN. CARRIAGE BOLTS OR WITH (2)-$\frac{7}{16}$ IN. x 4 IN. LAG SCREWS WITH WASHERS. BOLTS OR SCREWS ARE TO BE PLACED TWO INCHES (2 IN.) FROM EDGE OF PLANKS.
6) WHERE NECESSARY FOR SAFETY OF PEDESTRIAN TRAFFIC, A FULL EXTENSION OF THE BARRICADE MAY BE REQUIRED TO THE LIMITS OF THE RIGHT-OF-WAY.
7) WHERE PROVISION MUST BE MADE FOR ACCESS OF EQUIPMENT AND AUTHORIZED VEHICLES, LOCKABLE GATES MAY BE PROVIDED IN ONE SECTION OF THE BARRICADE.

TRAFFIC BARRICADE

(BE-S089901 - 01/2025) NOT TO SCALE

BOHLER
SITE CIVIL AND CONSULTING ENGINEERING
LAND SURVEYING
PROGRAM MANAGEMENT
LANDSCAPE ARCHITECTURE
SUSTAINABLE DESIGN
PERMITTING SERVICES
TRANSPORTATION SERVICES

THE INFORMATION, DESIGN AND CONTENT OF THIS PLAN ARE PROPRIETARY AND SHALL NOT BE COPIED OR USED FOR ANY PURPOSE WITHOUT PRIOR WRITTEN AUTHORIZATION FROM BOHLER. ONLY APPROVED, SIGNED AND SEALED PLANS SHALL BE UTILIZED FOR CONSTRUCTION PURPOSES.
© BOHLER

REVISIONS

REV	DATE	COMMENT	DRAWN BY / CHECKED BY
0	08/27/26	ISSUED FOR BID	MFR / SEL

TEXAS 811
TEXAS
YOU MUST CALL 811 BEFORE ANY EXCAVATION WHETHER IT'S ON PRIVATE OR PUBLIC LAND.
1-800-344-8377
www.texas811.org

PRELIMINARY

THIS DRAWING IS INTENDED FOR MUNICIPAL AND/OR AGENCY REVIEW AND APPROVAL. IT IS NOT INTENDED AS A CONSTRUCTION DOCUMENT UNLESS INDICATED OTHERWISE.

PROJECT No.:	TXA260019.00-0A
DRAWN BY:	FR
CHECKED BY:	MJH
DATE:	06/05/2026
CAD I.D.:	P-CIVL-CNDS

PROJECT:

CONSTRUCTION DOCUMENTS

FOR

EXPRESS OIL CHANGE
TIRE ENGINEERS

PROPOSED
MINOR AUTOMOTIVE REPAIR

SW CORNER OF US 380 & FM 720
CROSS ROADS, TX 76227
LOT 11R, BLOCK A

BOHLER
2600 NETWORK BLVD., SUITE 310
FRISCO, TX 75034
Phone: (469) 458-7300
TX@BohlerEng.com
TBPE NO. 18065 | TBPLS NO. 10194413

PLANS PREPARED BY
BOHLER
FOR REVIEW PURPOSES ONLY
MATHIAS J. HAUBERT
LICENSE NUMBER: 138306

SHEET TITLE:

CONSTRUCTION DETAILS

SHEET NUMBER:

C-902

ORG. DATE - 06/30/2026

Aug 18, 2026
P:\TX\2026\TXA260019.00\CAD\DRAWINGS\PLAN SETS\CIVIL SITE PLANS\P-CIVL-CNDS-TXA260019.00-0A----->LAYOUT: C-902 CONSTRUCTION DETAILS
MR

2024 INLET

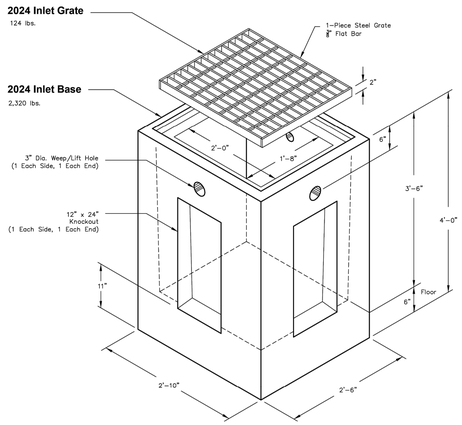

NOTES:

1. INLET AVAILABLE WITHOUT KNOCKOUTS (BPA STYLE).
2. ALL DIMENSIONS SUBJECT TO ALLOWABLE SPECIFICATION TOLERANCES.

Oldcastle Precast® PO Box 323, Wilsonville, Oregon 97070-0323 Tel: (503) 682-2844 Fax: (503) 682-2657	**2024 INLET** File Name: 020-2024-INLET Issue Date: 2016 oldcastleprecast.com/wilsonville	**2024 INLET**

24.0

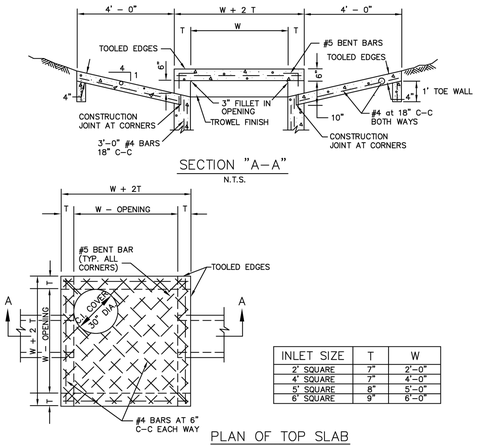

SECTION "A–A"
N.T.S.

PLAN OF TOP SLAB
N.T.S.

INLET SIZE	T	W
2' SQUARE	7"	2'–0"
4' SQUARE	7"	4'–0"
5' SQUARE	8"	5'–0"
6' SQUARE	9"	6'–0"

NOTES:

1. MATERIAL AND WORKMANSHIP SHALL CONFORM WITH THE REQUIREMENTS OF NCTCOG STANDARD SPECIFICATIONS FOR STANDARD CONCRETE MANHOLES. MINIMUM CLASS "C" CONCRETE.
2. LAYERS OF REINFORCING STEEL NEAREST THE INTERIOR AND EXTERIOR SURFACES SHALL HAVE A COVER OF 2" CLEAR OF BARS, UNLESS OTHERWISE NOTED.
3. FOR DETAILS OF REINFORCING OF LOWER PORTION OF INLET SEE APPROPRIATE SQUARE MANHOLE DETAILS.
4. DEPTH OF DROP INLET FROM FINISHED GRADE TO FLOW LINE OF INLET IS VARIABLE. APPROXIMATE DEPTH WILL BE SHOWN ON PLANS AT LOCATION OF INLET.
5. ALL STANDARD DROP INLETS SHALL HAVE ONE OPENING ON EACH SIDE UNLESS OTHERWISE SHOWN ON PLANS.
6. TOP SLAB MAY BE REINFORCED SAME AS 4' SQUARE MANHOLE.
7. PRECAST PRODUCTS MAY BE USED AT THE APPROVAL OF THE OWNER.
8. ALLOW 1" MIN CLEAR SPACE BETWEEN OD OF PIPE OR BOX AND INSIDE WALL OF INLET (OD OF PIPE OR BOX SHOULD ACCOUNT FOR SKEWED CONDITIONS).
9. DEPTHS OF GREATER THAN 10' NEED TO BE STRUCTURALLY ENGINEERED.

DROP INLET 2', 4', 5', OR 6' SQUARE	North Central Texas Council of Governments	STANDARD SPECIFICATION REFERENCE 702	
		DATE AUG '23	STANDARD DRAWING NO. 6040

BOHLER™
SITE CIVIL AND CONSULTING ENGINEERING
LAND SURVEYING
PROGRAM MANAGEMENT
LANDSCAPE ARCHITECTURE
SUSTAINABLE DESIGN
PERMITTING SERVICES
TRANSPORTATION SERVICES

THE INFORMATION, DESIGN AND CONTENT OF THIS PLAN ARE PROPRIETARY AND SHALL NOT BE COPIED OR USED FOR ANY PURPOSE WITHOUT PRIOR WRITTEN AUTHORIZATION FROM BOHLER. ONLY APPROVED, SIGNED AND SEALED PLANS SHALL BE UTILIZED FOR CONSTRUCTION PURPOSES
© BOHLER, INC.

REVISIONS

REV	DATE	COMMENT	DRAWN BY / CHECKED BY
0	08/27/26	ISSUED FOR BID	MFR / SEL

TEXAS
YOU MUST CALL 811 BEFORE ANY EXCAVATION
WHETHER IT'S ON PRIVATE OR PUBLIC LAND.
1-800-344-8377
www.texas811.org

PRELIMINARY

THIS DRAWING IS INTENDED FOR MUNICIPAL AND/OR AGENCY REVIEW AND APPROVAL. IT IS NOT INTENDED AS A CONSTRUCTION DOCUMENT UNLESS INDICATED OTHERWISE.

PROJECT No.: TXA260019.00-0A
DRAWN BY: FR
CHECKED BY: MJH
DATE: 06/05/2026
CAD I.D.: P-CIVL-CNDS

PROJECT:

CONSTRUCTION DOCUMENTS

FOR

PROPOSED
MINOR AUTOMOTIVE REPAIR

SW CORNER OF US 380 & FM 720
CROSS ROADS, TX 76227
LOT 11R, BLOCK A

BOHLER™
2600 NETWORK BLVD., SUITE 310
FRISCO, TX 75034
Phone: (469) 458-7300
TX@BohlerEng.com
TBPE NO. 18065 | TBPLS NO. 10194413

PLANS PREPARED BY
BOHLER
FOR REVIEW PURPOSES ONLY
MATHIAS J. HAUBERT
LICENSE NUMBER: 138306

SHEET TITLE:

CONSTRUCTION DETAILS

SHEET NUMBER:

C-903

ORG. DATE - 06/30/2026

Aug 18, 2026
P:\TX\026\TXA260019.00\CAD\DRAWINGS\PLAN SETS\CIVIL SITE PLANS\P-CIVL-CNDS-TXA260019.00-0A----LAYOUT: C-903 CONSTRUCTION DETAILS
MFR

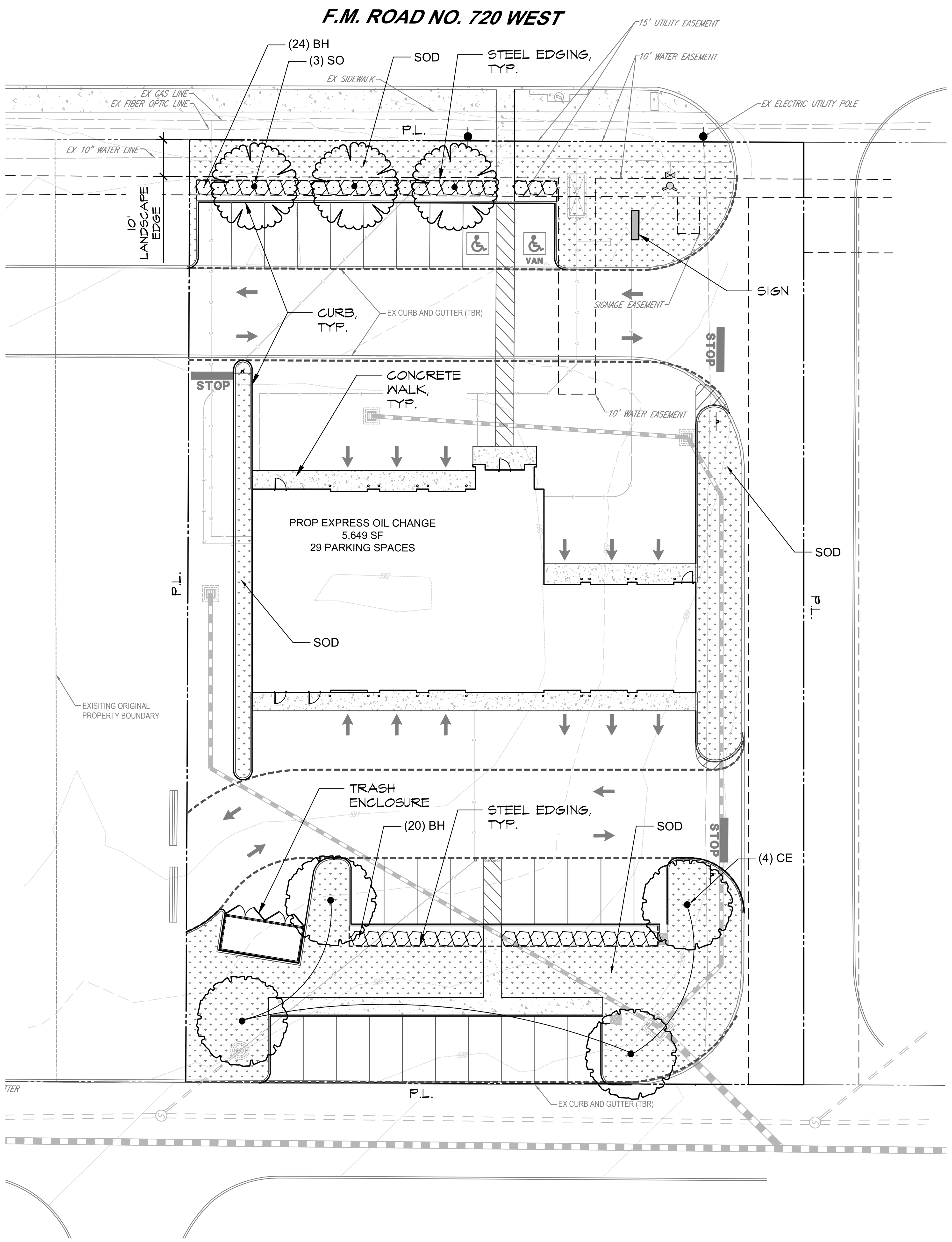

PLANT SCHEDULE

SYMBOL	CODE	QTY	BOTANICAL / COMMON NAME	CAL.	
CANOPY TREES					
	SO	3	Quercus shumardii Shumard Red Oak	3" Cal.	
	CE	4	Ulmus crassifolia Cedar Elm	3" Cal.	
SYMBOL	**CODE**	**QTY**	**BOTANICAL / COMMON NAME**	**CONT.**	**SPACING**
SHRUBS					
	BH	44	Ilex cornuta `Burfordii Nana` Dwarf Burford Holly	3 GAL	36" OC
SOD/SEED					
	SOD	8,043 sf	Cynodon 'TifTuf' TifTuf Hybrid Bermuda Grass		

LANDSCAPE CALCULATIONS

OVERALL SITE:	42,974 SF (0.987 ACRES)
PERMITTING AUTHORITY:	TOWN OF CROSS ROADS, TX
ZONING:	OUTSIDE OF CITY LIMITS (COMMERCIAL)
SITE USE:	AUTO REPAIR
LANDSCAPE REQUIREMENTS:	
LANDSCAPE EDGE - FM 720:	147 LF
10' WIDTH LANDSCAPE EDGE (147 x 10 = 1,470 SF)	1,470 SF
1 TREE / 500 SF OF LANDSCAPE EDGE REQUIRED (1,470 / 500 = 2.9):	3 TREES
LANDSCAPE EDGE TREES PROVIDED:	**3 TREES**
INTERIOR PARKING LOT LANDSCAPING:	13,425 SF / 29 SPACES
LANDSCAPING REQUIRED:	940 SF (7%)
LANDSCAPING PROVIDED:	**5,887 SF (44%)**
1 TREE / LANDSCAPE ISLAND:	**PROVIDED WHERE APPLICABLE**

GENERAL GRADING AND PLANTING NOTES

1. BY SUBMITTING A PROPOSAL FOR THE LANDSCAPE PLANTING SCOPE OF WORK, THE CONTRACTOR CONFIRMS THAT HE HAS READ, AND WILL COMPLY WITH, THE ASSOCIATED NOTES, SPECIFICATIONS, AND DETAILS WITH THIS PROJECT.
2. THE GENERAL CONTRACTOR IS RESPONSIBLE FOR REMOVING ALL EXISTING VEGETATION (EXCEPT WHERE NOTED TO REMAIN).
3. IN THE CONTEXT OF THESE PLANS, NOTES, AND SPECIFICATIONS, "FINISH GRADE" REFERS TO THE FINAL ELEVATION OF THE SOIL SURFACE (NOT TOP OF MULCH) AS INDICATED ON THE GRADING PLANS.
   a. BEFORE STARTING WORK, THE LANDSCAPE CONTRACTOR SHALL VERIFY THAT THE ROUGH GRADES OF ALL LANDSCAPE AREAS ARE WITHIN +/-0.1' OF FINISH GRADE. SEE SPECIFICATIONS FOR MORE DETAILED INSTRUCTION ON TURF AREA AND PLANTING BED PREPARATION.
   b. CONSTRUCT AND MAINTAIN FINISH GRADES AS SHOWN ON GRADING PLANS, AND CONSTRUCT AND MAINTAIN SLOPES AS RECOMMENDED BY THE GEOTECHNICAL REPORT. ALL LANDSCAPE AREAS SHALL HAVE POSITIVE DRAINAGE AWAY FROM STRUCTURES AT THE MINIMUM SLOPE SPECIFIED IN THE REPORT AND ON THE GRADING PLANS, AND AREAS OF POTENTIAL PONDING SHALL BE REGRADED TO BLEND IN WITH THE SURROUNDING GRADES AND ELIMINATE PONDING POTENTIAL.
   c. THE LANDSCAPE CONTRACTOR SHALL DETERMINE WHETHER OR NOT THE EXPORT OF ANY SOIL WILL BE NEEDED, TAKING INTO ACCOUNT THE ROUGH GRADE PROVIDED, THE AMOUNT OF SOIL AMENDMENTS TO BE ADDED (**BASED ON A SOIL TEST**, PER SPECIFICATIONS), AND THE FINISH GRADES TO BE ESTABLISHED.
   d. ENSURE THAT THE FINISH GRADE IN SHRUB AREAS IMMEDIATELY ADJACENT TO WALKS AND OTHER WALKING SURFACES, AFTER INSTALLING SOIL AMENDMENTS, IS 3" BELOW THE ADJACENT FINISH SURFACE, IN ORDER TO ALLOW FOR PROPER MULCH DEPTH. TAPER THE SOIL SURFACE TO MEET FINISH GRADE, AS SPECIFIED ON THE GRADING PLANS, AT APPROXIMATELY 18" AWAY FROM THE WALKS.
   e. ENSURE THAT THE FINISH GRADE IN TURF AREAS IMMEDIATELY ADJACENT TO WALKS AND OTHER WALKING SURFACES, AFTER INSTALLING SOIL AMENDMENTS, IS 1" BELOW THE FINISH SURFACE OF THE WALKS. TAPER THE SOIL SURFACE TO MEET FINISH GRADE, AS SPECIFIED ON THE GRADING PLANS, AT APPROXIMATELY 18" AWAY FROM THE WALKS.
   f. SHOULD ANY CONFLICTS AND/OR DISCREPANCIES ARISE BETWEEN THE GRADING PLANS, GEOTECHNICAL REPORT, THESE NOTES AND PLANS, AND ACTUAL CONDITIONS, THE CONTRACTOR SHALL IMMEDIATELY BRING SUCH ITEMS TO THE ATTENTION OF THE LANDSCAPE ARCHITECT, GENERAL CONTRACTOR, AND OWNER.
4. ALL PLANT LOCATIONS ARE DIAGRAMMATIC. ACTUAL LOCATIONS SHALL BE VERIFIED WITH THE LANDSCAPE ARCHITECT OR DESIGNER PRIOR TO PLANTING. THE LANDSCAPE CONTRACTOR SHALL ENSURE THAT ALL REQUIREMENTS OF THE PERMITTING AUTHORITY ARE MET (I.E., MINIMUM PLANT QUANTITIES, PLANTING METHODS, TREE PROTECTION METHODS, ETC.).
   a. THE LANDSCAPE CONTRACTOR IS RESPONSIBLE FOR DETERMINING PLANT QUANTITIES; PLANT QUANTITIES SHOWN ON LEGENDS AND CALLOUTS ARE FOR GENERAL INFORMATION ONLY. IN THE EVENT OF A DISCREPANCY BETWEEN THE PLAN AND THE PLANT LEGEND, THE PLANT QUANTITY AS SHOWN ON THE PLAN (FOR INDIVIDUAL SYMBOLS) OR CALLOUT (FOR GROUNDCOVER PATTERNS) SHALL TAKE PRECEDENCE.
   b. **NO SUBSTITUTIONS OF PLANT MATERIALS SHALL BE ALLOWED WITHOUT THE WRITTEN PERMISSION OF THE LANDSCAPE ARCHITECT.** IF SOME OF THE PLANTS ARE NOT AVAILABLE, THE LANDSCAPE CONTRACTOR SHALL NOTIFY THE LANDSCAPE ARCHITECT IN WRITING (VIA PROPER CHANNELS).
   c. THE CONTRACTOR SHALL, AT A MINIMUM, PROVIDE REPRESENTATIVE PHOTOS OF ALL PLANTS PROPOSED FOR THE PROJECT. THE CONTRACTOR SHALL ALLOW THE LANDSCAPE ARCHITECT AND THE OWNER/OWNER'S REPRESENTATIVE TO INSPECT, AND APPROVE OR REJECT, ALL PLANTS DELIVERED TO THE JOBSITE. REFER TO SPECIFICATIONS FOR ADDITIONAL REQUIREMENTS FOR SUBMITTALS.
5. CONTRACTOR SHALL PROVIDE AND INSTALL SOLID SOD IN ALL RIGHT-OF-WAYS AND PARKWAYS (UNLESS NOT ALLOWED BY THE LOCAL JURISDICTION) AND SHALL PROVIDE WATERING AND MAINTENANCE UNTIL THE TURF IS ESTABLISHED AND HAS BEEN ACCEPTED BY OWNER.
6. THE CONTRACTOR SHALL MAINTAIN THE LANDSCAPE IN A HEALTHY CONDITION FOR 90 DAYS AFTER ACCEPTANCE BY THE OWNER. REFER TO SPECIFICATIONS FOR CONDITIONS OF ACCEPTANCE FOR THE START OF THE MAINTENANCE PERIOD, AND FOR FINAL ACCEPTANCE AT THE END OF THE MAINTENANCE PERIOD.
7. AFTER FINAL ACCEPTANCE AT THE END OF THE MAINTENANCE PERIOD, CONTRACTOR IS TO PROVIDE SUGGESTED MAINTENANCE, WATERING SCHEDULE, WEEDING SCHEDULE, AND FERTILIZATION SCHEDULE.
8. SEE SPECIFICATIONS AND DETAILS FOR FURTHER REQUIREMENTS.

IRRIGATION CONCEPT

1. AN AUTOMATIC IRRIGATION SYSTEM SHALL BE INSTALLED AND OPERATIONAL BY THE TIME OF FINAL INSPECTION. THE ENTIRE IRRIGATION SYSTEM SHALL BE INSTALLED BY A LICENSED AND QUALIFIED IRRIGATION CONTRACTOR.
2. THE IRRIGATION SYSTEM WILL OPERATE ON POTABLE WATER, AND THE SYSTEM WILL HAVE APPROPRIATE BACKFLOW PREVENTION DEVICES INSTALLED TO PREVENT CONTAMINATION OF THE POTABLE SOURCE.
3. ALL NON-TURF PLANTED AREAS SHALL BE DRIP IRRIGATED. SODDED AND SEEDED AREAS SHALL BE IRRIGATED WITH SPRAY OR ROTOR HEADS AT 100% HEAD-TO-HEAD COVERAGE.
4. ALL PLANTS SHARING SIMILAR HYDROZONE CHARACTERISTICS SHALL BE PLACED ON A VALVE DEDICATED TO PROVIDE THE NECESSARY WATER REQUIREMENTS SPECIFIC TO THAT HYDROZONE.
5. THE IRRIGATION SYSTEM SHALL BE DESIGNED AND INSTALLED, TO THE MAXIMUM EXTENT POSSIBLE, TO CONSERVE WATER BY USING THE FOLLOWING DEVICES AND SYSTEMS: MATCHED PRECIPITATION RATE TECHNOLOGY ON ROTOR AND SPRAY HEADS (WHEREVER POSSIBLE), RAIN SENSORS, AND MULTI-PROGRAM COMPUTERIZED IRRIGATION CONTROLLERS FEATURING SENSORY INPUT CAPABILITIES.

ROOT BARRIERS

THE CONTRACTOR SHALL INSTALL ROOT BARRIERS NEAR ALL NEWLY-PLANTED TREES THAT ARE LOCATED WITHIN FIVE (5) FEET OF PAVING, CURBS, WATER, STORM, OR SANITARY SEWER UTILITIES. ROOT BARRIERS SHALL BE "CENTURY" OR "DEEP-ROOT" 24" DEEP PANELS (OR EQUAL). BARRIERS SHALL BE LOCATED IMMEDIATELY ADJACENT TO HARDSCAPE. INSTALL PANELS PER MANUFACTURER'S RECOMMENDATIONS. UNDER NO CIRCUMSTANCES SHALL THE CONTRACTOR USE ROOT BARRIERS OF A TYPE THAT COMPLETELY ENCIRCLE THE ROOTBALL.

MULCHES

AFTER ALL PLANTING IS COMPLETE, CONTRACTOR SHALL INSTALL 2" THICK LAYER OF 1-1/2" SHREDDED WOOD MULCH, NATURAL (UNDYED), OVER LANDSCAPE FABRIC IN ALL PLANTING AREAS (EXCEPT FOR TURF AND SEEDED AREAS). CONTRACTOR SHALL SUBMIT SAMPLES OF ALL MULCHES TO LANDSCAPE ARCHITECT AND OWNER FOR APPROVAL PRIOR TO CONSTRUCTION. ABSOLUTELY NO EXPOSED GROUND SHALL BE LEFT SHOWING ANYWHERE ON THE PROJECT AFTER MULCH HAS BEEN INSTALLED (SUBJECT TO THE CONDITIONS AND REQUIREMENTS OF THE "GENERAL GRADING AND PLANTING NOTES" AND SPECIFICATIONS).

PLANTING & IRRIGATION GUARANTEE

THE LANDSCAPE CONTRACTOR SHALL GUARANTEE THAT ALL NEWLY INSTALLED AND EXISTING PLANTS SHALL SURVIVE FOR ONE YEAR AFTER FINAL OWNER ACCEPTANCE OF THE INSTALLATION WORK. THE CONTRACTOR SHALL ALSO BE RESPONSIBLE FOR APPROPRIATE WATERING OF THE LANDSCAPE THROUGH INSTALLATION OF A PROPERLY DESIGNED IRRIGATION SYSTEM. THE OWNER SHALL APPROVE THE SYSTEM DESIGN BEFORE INSTALLATION OF PLANTS OR IRRIGATION.

NORTH

0' 10' 20' 40'

Scale 1" = 20'

NOTE: PRINTED DRAWING SIZE MAY HAVE CHANGED FROM ORIGINAL. VERIFY SCALE USING BAR SCALE ABOVE.

National Presence. Local Expertise.
EVERGREEN DESIGN GROUP
800.680.6630
www.evergreendesigngroup.com
LANDSCAPE ARCHITECTURE
LAND PLANNING · IRRIGATION DESIGN

BOHLER
SITE CIVIL AND CONSULTING ENGINEERING
LAND SURVEYING
PROGRAM MANAGEMENT
LANDSCAPE ARCHITECTURE
SUSTAINABLE DESIGN
PERMITTING SERVICES
TRANSPORTATION SERVICES

THE INFORMATION, DESIGN AND CONTENT OF THIS PLAN ARE PROPRIETARY AND SHALL NOT BE COPIED OR USED FOR ANY PURPOSE WITHOUT PRIOR WRITTEN AUTHORIZATION FROM BOHLER. ONLY APPROVED, SIGNED AND SEALED PLANS SHALL BE UTILIZED FOR CONSTRUCTION PURPOSES. © BOHLER

REVISIONS

REV	DATE	COMMENT	DRAWN BY / CHECKED BY
0	08/27/26	ISSUED FOR BID	MFR / SEL

811 Know what's below. Call before you dig.
TEXAS
YOU MUST CALL 811 BEFORE ANY EXCAVATION WHETHER IT'S ON PRIVATE OR PUBLIC LAND.
1-800-344-8377
www.texas811.org

PRELIMINARY

THIS DRAWING IS INTENDED FOR MUNICIPAL AND/OR AGENCY REVIEW AND APPROVAL. IT IS NOT INTENDED AS A CONSTRUCTION DOCUMENT UNLESS INDICATED OTHERWISE.

PROJECT No.:	----
DRAWN BY:	GL
CHECKED BY:	CS
DATE:	07/28/2026
CAD I.D.:	TBLOCK.DWG

PROJECT:

CONSTRUCTION DOCUMENTS

— FOR —

..\..\..\Resources\Images\EOC LOGO.png

PROPOSED MINOR AUTOMOTIVE REPAIR

SW CORNER OF US 380 & FM 720
CROSS ROADS, TX 76227
LOT 11R, BLOCK A

BOHLER
2600 NETWORK BLVD., SUITE 310
FRISCO, TX 75034
Phone: (469) 458-7300
TX@BohlerEng.com
TBPE NO. 18065 | TBPLS NO. 10194413

REGISTERED LANDSCAPE ARCHITECT
GAVIN W. LOFSTEDT
3428
STATE OF TEXAS
07/28/2026

SHEET TITLE:

LANDSCAPE PLANTING

SHEET NUMBER:

LP-1

ORG. DATE - 07-28-26

Jul 27, 2026
/TMP/ACPUBLISH_5525/EXPRESS OIL_CROSS ROADS TX_LP---->LAYOUT: LP-1

PLANTING SPECIFICATIONS

GENERAL

A. QUALIFICATIONS OF LANDSCAPE CONTRACTOR
1. ALL LANDSCAPE WORK SHOWN ON THESE PLANS SHALL BE PERFORMED BY A SINGLE FIRM SPECIALIZING IN LANDSCAPE PLANTING.
2. A LIST OF SUCCESSFULLY COMPLETED PROJECTS OF THIS TYPE, SIZE AND NATURE MAY BE REQUESTED BY THE OWNER FOR FURTHER QUALIFICATION MEASURES.
3. THE LANDSCAPE CONTRACTOR SHALL HOLD A VALID NURSERY AND FLORAL CERTIFICATE ISSUED BY THE TEXAS DEPARTMENT OF AGRICULTURE, AS WELL AS OPERATE UNDER A COMMERCIAL PESTICIDE APPLICATOR LICENSE ISSUED BY EITHER THE TEXAS DEPARTMENT OF AGRICULTURE OR THE TEXAS STRUCTURAL PEST CONTROL BOARD.

B. SCOPE OF WORK
1. WORK COVERED BY THESE SECTIONS INCLUDES THE FURNISHING AND PAYMENT OF ALL MATERIALS, LABOR, SERVICES, EQUIPMENT, LICENSES, TAXES AND ANY OTHER ITEMS THAT ARE NECESSARY FOR THE EXECUTION, INSTALLATION AND COMPLETION OF ALL WORK, SPECIFIED HEREIN AND / OR SHOWN ON THE LANDSCAPE PLANS, NOTES, AND DETAILS.
2. ALL WORK SHALL BE PERFORMED IN ACCORDANCE WITH ALL APPLICABLE LAWS, CODES AND REGULATIONS REQUIRED BY AUTHORITIES HAVING JURISDICTION OVER SUCH WORK, INCLUDING ALL INSPECTIONS AND PERMITS REQUIRED BY FEDERAL, STATE AND LOCAL AUTHORITIES IN SUPPLY, TRANSPORTATION AND INSTALLATION OF MATERIALS.
3. THE LANDSCAPE CONTRACTOR SHALL VERIFY THE LOCATION OF ALL UNDERGROUND UTILITY LINES (WATER, SEWER, ELECTRICAL, TELEPHONE, GAS, CABLE, TELEVISION, ETC.) PRIOR TO THE START OF ANY WORK.

PRODUCTS

A. ALL MANUFACTURED PRODUCTS SHALL BE NEW.

B. CONTAINER AND BALLED-AND-BURLAPPED PLANTS:
1. FURNISH NURSERY-GROWN PLANTS COMPLYING WITH ANSI Z60.1-2014. PROVIDE WELL-SHAPED, FULLY BRANCHED, HEALTHY, VIGOROUS STOCK FREE OF DISEASE, INSECTS, EGGS, LARVAE, AND DEFECTS SUCH AS KNOTS, SUN SCALD, INJURIES, ABRASIONS, AND DISFIGUREMENT. ALL PLANTS WITHIN A SPECIES SHALL HAVE SIMILAR SIZE, AND SHALL BE OF A FORM TYPICAL FOR THE SPECIES. ALL TREES SHALL BE OBTAINED FROM SOURCES WITHIN 200 MILES OF THE PROJECT SITE, AND WITH SIMILAR CLIMACTIC CONDITIONS.
2. ROOT SYSTEMS SHALL BE HEALTHY, DENSELY BRANCHED ROOT SYSTEMS, NON-POT-BOUND, FREE FROM ENCIRCLING AND/OR GIRDLING ROOTS, AND FREE FROM ANY OTHER ROOT DEFECTS (SUCH AS J-SHAPED ROOTS).
3. ANY PLANT DEEMED UNACCEPTABLE BY THE LANDSCAPE ARCHITECT OR OWNER SHALL BE IMMEDIATELY REMOVED FROM THE SITE AND SHALL BE REPLACED WITH AN ACCEPTBLE PLANT OF LIKE TYPE AND SIZE AT THE CONTRACTOR'S OWN EXPENSE. ANY PLANTS APPEARING TO BE UNHEALTHY, EVEN IF DETERMINED TO STILL BE ALIVE, SHALL NOT BE ACCEPTED. THE LANDSCAPE ARCHITECT AND OWNER SHALL BE THE SOLE JUDGES AS TO THE ACCEPTABILITY OF PLANT MATERIAL.
4. ALL TREES SHALL BE STANDARD IN FORM, UNLESS OTHERWISE SPECIFIED. TREES WITH CENTRAL LEADERS WILL NOT BE ACCEPTED IF LEADER IS DAMAGED OR REMOVED. PRUNE ALL DAMAGED TWIGS AFTER PLANTING.
5. CALIPER MEASUREMENTS FOR STANDARD (SINGLE TRUNK) TREES SHALL BE AS FOLLOWS: SIX INCHES ABOVE THE ROOT FLARE FOR TREES UP TO AND INCLUDING FOUR INCHES IN CALIPER, AND TWELVE INCHES ABOVE THE ROOT FLARE FOR TREES EXCEEDING FOUR INCHES IN CALIPER.
6. MULTI-TRUNK TREES SHALL BE MEASURED BY THEIR OVERALL HEIGHT, MEASURED FROM THE TOP OF THE ROOT BALL.
7. ANY TREE OR SHRUB SHOWN TO HAVE EXCESS SOIL PLACED ON TOP OF THE ROOT BALL, SO THAT THE ROOT FLARE HAS BEEN COMPLETELY COVERED, SHALL BE REJECTED.

C. SOD: PROVIDE WELL-ROOTED SOD OF THE VARIETY NOTED ON THE PLANS. SOD SHALL BE CUT FROM HEALTHY, MATURE TURF WITH SOIL THICKNESS OF 3/4" TO 1". EACH PALLET OF SOD SHALL BE ACCOMPANIED BY A CERTIFICATE FROM SUPPLIER STATING THE COMPOSITION OF THE SOD.

D. SEED: PROVIDE BLEND OF SPECIES AND VARIETIES AS NOTED ON THE PLANS, WITH MAXIMUM PERCENTAGES OF PURITY, GERMINATION, AND MINIMUM PERCENTAGE OF WEED SEED AS INDICATED ON PLANS. EACH BAG OF SEED SHALL BE ACCOMPANIED BY A TAG FROM THE SUPPLIER INDICATING THE COMPOSITION OF THE SEED.

E. TOPSOIL: SANDY TO CLAY LOAM TOPSOIL, FREE OF STONES LARGER THAN ½ INCH, FOREIGN MATTER, PLANTS, ROOTS, AND SEEDS.

F. COMPOST: WELL-COMPOSTED, STABLE, AND WEED-FREE ORGANIC MATTER, pH RANGE OF 5.5 TO 8; MOISTURE CONTENT 35 TO 55 PERCENT BY WEIGHT; 100 PERCENT PASSING THROUGH 3/4-INCH SIEVE; SOLUBLE SALT CONTENT OF 5 TO 10 DECISIEMENS/M; NOT EXCEEDING 0.5 PERCENT INERT CONTAMINANTS AND FREE OF SUBSTANCES TOXIC TO PLANTINGS. NO MANURE OR ANIMAL-BASED PRODUCTS SHALL BE USED.

G. FERTILIZER: GRANULAR FERTILIZER CONSISTING OF NITROGEN, PHOSPHORUS, POTASSIUM, AND OTHER NUTRIENTS IN PROPORTIONS, AMOUNTS, AND RELEASE RATES RECOMMENDED IN A SOIL REPORT FROM A QUALIFIED SOIL-TESTING AGENCY (SEE BELOW).

H. MULCH: SIZE AND TYPE AS INDICATED ON PLANS, FREE FROM DELETERIOUS MATERIALS AND SUITABLE AS A TOP DRESSING OF TREES AND SHRUBS.

I. WEED FABRIC: 5 OUNCE, WOVEN, NEEDLE-PUNCHED FABRIC, SUCH AS DEWITT PRO5 LANDSCAPE FABRIC (OR APPROVED EQUAL).

J. TREE STAKING AND GUYING
1. STAKES: 6' LONG GREEN METAL T-POSTS.
2. GUY AND TIE WIRE: ASTM A 641, CLASS 1, GALVANIZED-STEEL WIRE, 2-STRAND, TWISTED, 0.106 INCH DIAMETER.
3. STRAP CHAFING GUARD: REINFORCED NYLON OR CANVAS AT LEAST 1-1/2 INCH WIDE, WITH GROMMETS TO PROTECT TREE TRUNKS FROM DAMAGE.

M. STEEL EDGING: PROFESSIONAL STEEL EDGING, 10 GAUGE THICK X 4 INCHES WIDE, FACTORY PAINTED DARK GREEN. ACCEPTABLE MANUFACTURERS INCLUDE COL-MET OR APPROVED EQUAL.

N. PRE-EMERGENT HERBICIDES: ANY GRANULAR, NON-STAINING PRE-EMERGENT HERBICIDE THAT IS LABELED FOR THE SPECIFIC ORNAMENTALS OR TURF ON WHICH IT WILL BE UTILIZED. PRE-EMERGENT HERBICIDES SHALL BE APPLIED PER THE MANUFACTURER'S LABELED RATES.

METHODS

A. SOIL PREPARATION
1. BEFORE STARTING WORK, THE LANDSCAPE CONTRACTOR SHALL VERIFY THAT THE GRADE OF ALL LANDSCAPE AREAS ARE WITHIN +/-0.1' OF FINISH GRADE. THE CONTRACTOR SHALL NOTIFY THE OWNER IMMEDIATELY SHOULD ANY DISCREPANCIES EXIST.
2. SOIL TESTING:
   a. AFTER FINISH GRADES HAVE BEEN ESTABLISHED, CONTRACTOR SHALL HAVE SOIL SAMPLES TESTED BY AN ESTABLISHED SOIL TESTING LABORATORY FOR THE FOLLOWING: SOIL TEXTURAL CLASS, GENERAL SOIL FERTILITY, pH, ORGANIC MATTER CONTENT, SALT (CEC), LIME, SODIUM ADSORPTION RATIO (SAR) AND BORON CONTENT. EACH SAMPLE SUBMITTED SHALL CONTAIN NO LESS THAN ONE QUART OF SOIL.
   b. CONTRACTOR SHALL ALSO SUBMIT THE PROJECT'S PLANT LIST TO THE LABORATORY ALONG WITH THE SOIL SAMPLES.
   c. THE SOIL REPORT PRODUCED BY THE LABORATORY SHALL CONTAIN RECOMMENDATIONS FOR THE FOLLOWING (AS APPROPRIATE): GENERAL SOIL PREPARATION AND BACKFILL MIXES, PRE-PLANT FERTILIZER APPLICATIONS, AND ANY OTHER SOIL RELATED ISSUES. THE REPORT SHALL ALSO PROVIDE A FERTILIZER PROGRAM FOR THE ESTABLISHMENT PERIOD AND FOR LONG-TERM MAINTENANCE.
3. THE CONTRACTOR SHALL INSTALL SOIL AMENDMENTS AND FERTILIZERS PER THE SOILS REPORT RECOMMENDATIONS. ANY CHANGE IN COST DUE TO THE SOIL REPORT RECOMMENDATIONS, EITHER INCREASE OR DECREASE, SHALL BE SUBMITTED TO THE OWNER WITH THE REPORT.
4. <u>FOR BIDDING PURPOSES ONLY</u>, THE SOIL PREPARATION SHALL CONSIST OF THE FOLLOWING:
   a. TURF: INCORPORATE THE FOLLOWING AMENDMENTS INTO THE TOP 8" OF SOIL BY MEANS OF ROTOTILLING AFTER CROSS-RIPPING:
   i. NITROGEN STABILIZED ORGANIC AMENDMENT - 4 CU. YDS. PER 1,000 S.F.
   ii. PREPLANT TURF FERTILIZER (10-20-10 OR SIMILAR, SLOW RELEASE, ORGANIC) - 15 LBS PER 1,000 S.F.
   iii. "CLAY BUSTER" OR EQUAL - USE MANUFACTURER'S RECOMMENDED RATE
   b. TREES, SHRUBS, AND PERENNIALS: INCORPORATE THE FOLLOWING AMENDMENTS INTO THE TOP 8" OF SOIL BY MEANS OF ROTOTILLING AFTER CROSS-RIPPING:
   i. NITROGEN STABILIZED ORGANIC AMENDMENT - 4 CU. YDS. PER 1,000 S.F.
   ii. 12-12-12 FERTILIZER (OR SIMILAR, ORGANIC, SLOW RELEASE) - 10 LBS. PER CU. YD.
   iii. "CLAY BUSTER" OR EQUAL - USE MANUFACTURER'S RECOMMENDED RATE
   iv. IRON SULPHATE - 2 LBS. PER CU. YD.
5. CONTRACTOR SHALL ENSURE THAT THE GRADE IN SOD AREAS SHALL BE 1" BELOW FINISH GRADE BEFORE INSTALLING SOIL AMENDMENTS, AND 2" BELOW FINISH GRADE IN SHRUB AREAS BEFORE INSTALLING SOIL AMENDMENTS. MULCH COVER WITHIN 6" OF CONCRETE WALKS AND CURBS SHALL NOT PROTRUDE ABOVE THE FINISH SURFACE OF THE WALKS AND CURBS. MULCH COVER WITHIN 12" OF WALLS SHALL BE AT LEAST 3" LOWER THAN THE TOP OF WALL.
6. ONCE SOIL PREPARATION IS COMPLETE, THE LANDSCAPE CONTRACTOR SHALL ENSURE THAT THERE ARE NO DEBRIS, TRASH, OR STONES LARGER THAN 1" REMAINING IN THE TOP 6" OF SOIL.

B. GENERAL PLANTING
1. REMOVE ALL NURSERY TAGS AND STAKES FROM PLANTS.
2. EXCEPT IN AREAS TO BE PLANTED WITH ORNAMENTAL GRASSES, APPLY PRE-EMERGENT HERBICIDES AT THE MANUFACTURER'S RECOMMENDED RATE.
3. TRENCHING NEAR EXISTING TREES:
   a. CONTRACTOR SHALL NOT DISTURB ROOTS 1-1/2" AND LARGER IN DIAMETER WITHIN THE CRITICAL ROOT ZONE (CRZ) OF EXISTING TREES, AND SHALL EXERCISE ALL POSSIBLE CARE AND PRECAUTIONS TO AVOID INJURY TO TREE ROOTS, TRUNKS, AND BRANCHES. THE CRZ IS DEFINED AS A CIRCULAR AREA EXTENDING OUTWARD FROM THE TREE TRUNK, WITH A RADIUS EQUAL TO 1' FOR EVERY 1" OF TRUNK DIAMETER-AT-BREAST-HEIGHT (4.5' ABOVE THE AVERAGE GRADE AT THE TRUNK).
   b. ALL EXCAVATION WITHIN THE CRZ SHALL BE PERFORMED USING HAND TOOLS. NO MACHINE EXCAVATION OR TRENCHING OF ANY KIND SHALL BE ALLOWED WITHIN THE CRZ.
   c. ALTER ALIGNMENT OF PIPE TO AVOID TREE ROOTS 1-1/2" AND LARGER IN DIAMETER. WHERE TREE ROOTS 1-1/2" AND LARGER IN DIAMETER ARE ENCOUNTERED IN THE FIELD, TUNNEL UNDER SUCH ROOTS. WRAP EXPOSED ROOTS WITH SEVERAL LAYERS OF BURLAP AND KEEP MOIST. CLOSE ALL TRENCHES WITHIN THE CANOPY DRIP LINES WITHIN 24 HOURS.
   d. ALL SEVERED ROOTS SHALL BE HAND PRUNED WITH SHARP TOOLS AND ALLOWED TO AIR-DRY. DO NOT USE ANY SORT OF SEALERS OR WOUND PAINTS.

C. TREE PLANTING
1. TREE PLANTING HOLES SHALL BE EXCAVATED TO MINIMUM WIDTH OF TWO TIMES THE WIDTH OF THE ROOTBALL, AND TO A DEPTH EQUAL TO THE DEPTH OF THE ROOTBALL LESS TWO TO FOUR INCHES.
2. SCARIFY THE SIDES AND BOTTOM OF THE PLANTING HOLE PRIOR TO THE PLACEMENT OF THE TREE. REMOVE ANY GLAZING THAT MAY HAVE BEEN CAUSED DURING THE EXCAVATION OF THE HOLE.
3. FOR CONTAINER AND BOX TREES, TO REMOVE ANY POTENTIALLY GIRDLING ROOTS AND OTHER ROOT DEFECTS, THE CONTRACTOR SHALL SHAVE A 1" LAYER OFF OF THE SIDES AND BOTTOM OF THE ROOTBALL OF ALL TREES JUST BEFORE PLACING INTO THE PLANTING PIT. DO NOT "TEASE" ROOTS OUT FROM THE ROOTBALL.
4. INSTALL THE TREE ON UNDISTURBED SUBGRADE SO THAT THE TOP OF THE ROOTBALL IS TWO TO FOUR INCHES ABOVE THE SURROUNDING GRADE.
5. BACKFILL THE TREE HOLE UTILIZING THE EXISTING TOPSOIL FROM ON-SITE. ROCKS LARGER THAN 1" DIA. AND ALL OTHER DEBRIS SHALL BE REMOVED FROM THE SOIL PRIOR TO THE BACKFILL. SHOULD ADDITIONAL SOIL BE REQUIRED TO ACCOMPLISH THIS TASK, USE STORED TOPSOIL FROM ON-SITE OR IMPORT ADDITIONAL TOPSOIL FROM OFF-SITE AT NO ADDITIONAL COST TO THE OWNER. IMPORTED TOPSOIL SHALL BE OF SIMILAR TEXTURAL CLASS AND COMPOSITION IN THE ON-SITE SOIL.
6. THE TOTAL NUMBER OF TREE STAKES (BEYOND THE MINIMUMS LISTED BELOW) WILL BE LEFT TO THE LANDSCAPE CONTRACTOR'S DISCRETION. SHOULD ANY TREES FALL OR LEAN, THE LANDSCAPE CONTRACTOR SHALL STRAIGHTEN THE TREE, OR REPLACE IT SHOULD IT BECOME DAMAGED. TREE STAKING SHALL ADHERE TO THE FOLLOWING GUIDELINES:
   a. 1"-2" TREES — TWO STAKES PER TREE
   b. 2-1/2"-4" TREES — THREE STAKES PER TREE
   c. TREES OVER 4" CALIPER — GUY AS NEEDED
   d. MULTI-TRUNK TREES — THREE STAKES PER TREE MINIMUM, QUANTITY AND POSITIONS AS NEEDED TO STABILIZE THE TREE
7. UPON COMPLETION OF PLANTING, CONSTRUCT AN EARTH WATERING BASIN AROUND THE TREE. COVER THE INTERIOR OF THE TREE RING WITH THE WEED BARRIER CLOTH AND TOPDRESS WITH MULCH (TYPE AND DEPTH PER PLANS).

D. SHRUB, PERENNIAL, AND GROUNDCOVER PLANTING
1. DIG THE PLANTING HOLES TWICE AS WIDE AND 2" LESS DEEP THAN EACH PLANT'S ROOTBALL. INSTALL THE PLANT IN THE HOLE. BACKFILL AROUND THE PLANT WITH SOIL AMENDED PER SOIL TEST RECOMMENDATIONS.
2. INSTALL THE WEED BARRIER CLOTH, OVERLAPPING IT AT THE ENDS. UTILIZE STEEL STAPLES TO KEEP THE WEED BARRIER CLOTH IN PLACE.
3. WHEN PLANTING IS COMPLETE, INSTALL MULCH (TYPE AND DEPTH PER PLANS) OVER ALL PLANTING BEDS, COVERING THE ENTIRE PLANTING AREA.

E. SODDING
1. SOD VARIETY TO BE AS SPECIFIED ON THE LANDSCAPE PLAN.
2. LAY SOD WITHIN 24 HOURS FROM THE TIME OF STRIPPING. DO NOT LAY IF THE GROUND IS FROZEN.
3. LAY THE SOD TO FORM A SOLID MASS WITH TIGHTLY FITTED JOINTS. BUTT ENDS AND SIDES OF SOD STRIPS - DO NOT OVERLAP. STAGGER STRIPS TO OFFSET JOINTS IN ADJACENT COURSES.
4. ROLL THE SOD TO ENSURE GOOD CONTACT OF THE SOD'S ROOT SYSTEM WITH THE SOIL UNDERNEATH.
5. WATER THE SOD THOROUGHLY WITH A FINE SPRAY IMMEDIATELY AFTER PLANTING TO OBTAIN AT LEAST SIX INCHES OF PENETRATION INTO THE SOIL BELOW THE SOD.

G. CLEAN UP
1. DURING LANDSCAPE PREPARATION AND PLANTING, KEEP ALL PAVEMENT CLEAN AND ALL WORK AREAS IN A NEAT, ORDERLY CONDITION.
2. DISPOSED LEGALLY OF ALL EXCAVATED MATERIALS OFF THE PROJECT SITE.

H. INSPECTION AND ACCEPTANCE
1. UPON COMPLETION OF THE WORK, THE LANDSCAPE CONTRACTOR SHALL PROVIDE THE SITE CLEAN, FREE OF DEBRIS AND TRASH, AND SUITABLE FOR USE AS INTENDED. THE LANDSCAPE CONTRACTOR SHALL THEN REQUEST AN INSPECTION BY THE OWNER TO DETERMINE FINAL ACCEPTABILITY.
2. WHEN THE INSPECTED PLANTING WORK DOES NOT COMPLY WITH THE CONTRACT DOCUMENTS, THE LANDSCAPE CONTRACTOR SHALL REPLACE AND/OR REPAIR THE REJECTED WORK TO THE OWNER'S SATISFACTION WITHIN 24 HOURS.
3. THE LANDSCAPE MAINTENANCE PERIOD WILL NOT COMMENCE UNTIL THE LANDSCAPE WORK HAS BEEN RE-INSPECTED BY THE OWNER AND FOUND TO BE ACCEPTABLE. AT THAT TIME, A WRITTEN NOTICE OF FINAL ACCEPTANCE WILL BE ISSUED BY THE OWNER, AND THE MAINTENANCE AND GUARANTEE PERIODS WILL COMMENCE.

I. LANDSCAPE MAINTENANCE
1. THE LANDSCAPE CONTRACTOR SHALL BE RESPONSIBLE FOR THE MAINTENANCE OF ALL WORK SHOWN ON THESE PLANS FOR 90 DAYS BEYOND FINAL ACCEPTANCE OF ALL LANDSCAPE WORK BY THE OWNER. LANDSCAPE MAINTENANCE SHALL INCLUDE WEEKLY SITE VISITS FOR THE FOLLOWING ACTIONS (AS APPROPRIATE): PROPER PRUNING, RESTAKING OF TREES, RESETTING OF PLANTS THAT HAVE SETTLED, MOWING AND AERATION OF LAWNS, WEEDING, RESEEDING AREAS WHICH HAVE NOT GERMINATED WELL, TREATING FOR INSECTS AND DISEASES,REPLACEMENT OF MULCH, REMOVAL OF LITTER, REPAIRS TO THE IRRIGATION SYSTEM DUE TO FAULTY PARTS AND/OR WORKMANSHIP, AND THE APPROPRIATE WATERING OF ALL PLANTINGS. THE LANDSCAPE CONTRACTOR SHALL MAINTAIN THE IRRIGATION SYSTEM IN PROPER WORKING ORDER, WITH SCHEDULING ADJUSTMENTS BY SEASON TO MAXIMIZE WATER CONSERVATION.
2. SHOULD SEEDED AND/OR SODDED AREAS NOT BE COVERED BY AN AUTOMATIC IRRIGATION SYSTEM, THE LANDSCAPE CONTRACTOR SHALL BE RESPONSIBLE FOR WATERING THESE AREAS AND OBTAINING A FULL, HEALTHY STAND OF GRASS AT NO ADDITIONAL COST TO THE OWNER.
3. TO ACHIEVE FINAL ACCEPTANCE AT THE END OF THE MAINTENANCE PERIOD, ALL OF THE FOLLOWING CONDITIONS MUST OCCUR:
   a. THE LANDSCAPE SHALL SHOW ACTIVE, HEALTHY GROWTH (WITH EXCEPTIONS MADE FOR SEASONAL DORMANCY). ALL PLANTS NOT MEETING THIS CONDITION SHALL BE REJECTED AND REPLACED BY HEALTHY PLANT MATERIAL PRIOR TO FINAL ACCEPTANCE.
   b. ALL HARDSCAPE SHALL BE CLEANED PRIOR TO FINAL ACCEPTANCE.
   c. SODDED AREAS MUST BE ACTIVELY GROWING AND MUST REACH A MINIMUM HEIGHT OF 1 1/2 INCHES BEFORE FIRST MOWING. HYDROMULCHED AREAS SHALL SHOW ACTIVE, HEALTHY GROWTH. BARE AREAS LARGER THAN TWELVE SQUARE INCHES MUST BE RESODDED OR RESEEDED (AS APPROPRIATE) PRIOR TO FINAL ACCEPTANCE. ALL SODDED TURF SHALL BE NEATLY MOWED.

J. WARRANTY PERIOD, PLANT GUARANTEE AND REPLACEMENTS
1. THE LANDSCAPE CONTRACTOR SHALL GUARANTEE ALL TREES, SHRUBS, PERENNIALS, SOD, SEEDED/HYDROMULCHED AREAS, AND IRRIGATION SYSTEMS FOR A PERIOD OF <u>ONE YEAR</u> FROM THE DATE OF THE OWNER'S FINAL ACCEPTANCE (90 DAYS FOR ANNUAL PLANTS). THE CONTRACTOR SHALL REPLACE, AT HIS OWN EXPENSE AND TO THE SATISFACTION OF THE OWNER, ANY PLANTS WHICH DIE IN THAT TIME, OR REPAIR ANY PORTIONS OF THE IRRIGATION SYSTEM WHICH OPERATE IMPROPERLY.
2. AFTER THE INITIAL MAINTENANCE PERIOD AND DURING THE GUARANTEE PERIOD, THE LANDSCAPE CONTRACTOR SHALL ONLY BE RESPONSIBLE FOR REPLACEMENT OF PLANTS WHEN PLANT DEATH CANNOT BE ATTRIBUTED DIRECTLY TO OVERWATERING OR OTHER DAMAGE BY HUMAN ACTIONS.

K. PROVIDE A MINIMUM OF (2) COPIES OF RECORD DRAWINGS TO THE OWNER UPON COMPLETION OF WORK. A RECORD DRAWING IS A RECORD OF ALL CHANGES THAT OCCURRED IN THE FIELD AND THAT ARE DOCUMENTED THROUGH CHANGE ORDERS, ADDENDA, OR CONTRACTOR/CONSULTANT DRAWING MARKUPS.

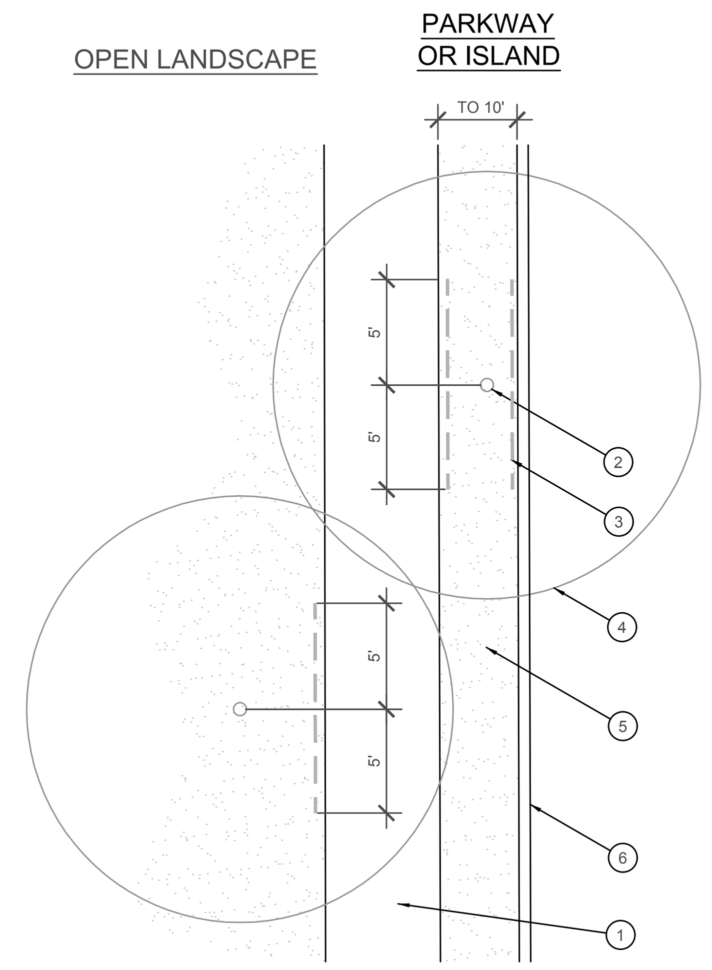

1. TYPICAL WALKWAY OR PAVING
2. TREE TRUNK
3. LINEAR ROOT BARRIER MATERIAL. SEE PLANTING NOTES FOR TYPE AND MANUFACTURER. INSTALL PER MANUFACTURER'S SPECIFICATIONS.
4. TREE CANOPY
5. TYPICAL PLANTING AREA
6. TYPICAL CURB AND GUTTER

NOTES:
1) INSTALL ROOT BARRIERS NEAR ALL NEWLY-PLANTED TREES THAT ARE LOCATED WITHIN FIVE (5) FEET OF PAVING OR CURBS.
2) BARRIERS SHALL BE LOCATED IMMEDIATELY ADJACENT TO HARDSCAPE. UNDER NO CIRCUMSTANCES SHALL THE CONTRACTOR USE ROOT BARRIERS OF A TYPE THAT COMPLETELY ENCIRCLE THE ROOTBALL.

D — ROOT BARRIER - PLAN VIEW
SCALE: NOT TO SCALE

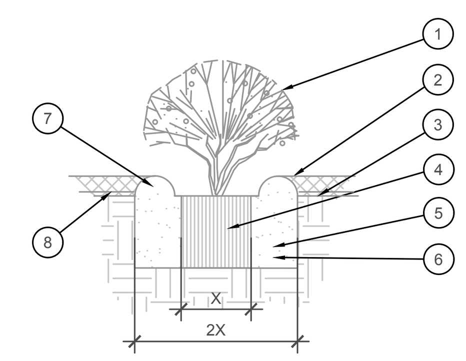

1. SHRUB, PERENNIAL, OR ORNAMENTAL GRASS.
2. MULCH, TYPE AND DEPTH PER PLANS. PLACE NO MORE THAN 1" OF MULCH WITHIN 6" OF PLANT CENTER.
3. FINISH GRADE.
4. ROOT BALL.
5. BACKFILL. AMEND AND FERTILIZE ONLY AS RECOMMENDED IN SOIL FERTILITY ANALYSIS.
6. UNDISTURBED NATIVE SOIL.
7. 3" HIGH EARTHEN WATERING BASIN.
8. WEED FABRIC UNDER MULCH.

E — SHRUB AND GROUNDCOVER PLANTING
SCALE: NTS

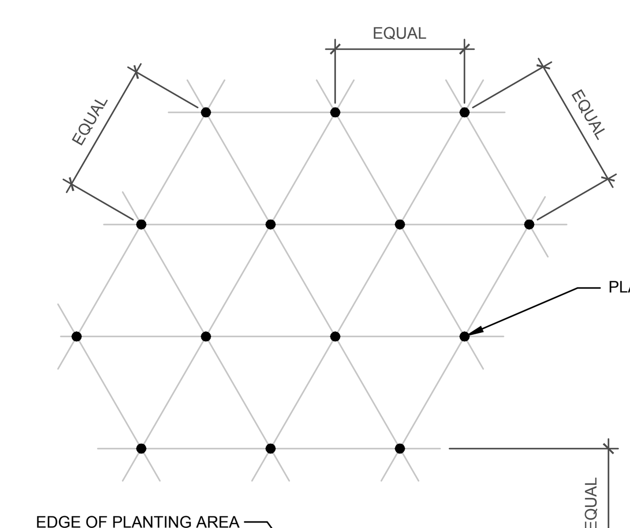

NOTE: ALL PLANTS SHALL BE PLANTED AT EQUAL TRIANGULAR SPACING (EXCEPT WHERE SHOWN ON PLANS AS INFORMAL GROUPINGS). REFER TO PLANT LEGEND FOR SPACING DISTANCE BETWEEN PLANTS.

1) STEP 1: DETERMINE TOTAL PLANTS FOR THE AREA WITH THE FOLLOWING FORMULA:
TOTAL AREA / AREA DIVIDER = TOTAL PLANTS

PLANT SPACING	AREA DIVIDER	PLANT SPACING	AREA DIVIDER
6"	0.22	18"	1.95
8"	0.39	24"	3.46
10"	0.60	30"	5.41
12"	0.87	36"	7.79
15"	1.35		

2) STEP 2: SUBTRACT THE ROW (S) OF PLANTS THAT WOULD OCCUR AT THE EDGE OF THE PLANTED AREA WITH THE FOLLOWING FORMULA: TOTAL PERIMETER LENGTH / PLANT SPACING = TOTAL PLANT SUBTRACTION

<u>**EXAMPLE:**</u> PLANTS AT 18" O.C. IN 100 SF PLANTING AREA, 40 LF PERIMETER
STEP 1: 100 SF/1.95 = 51 PLANTS
STEP 2: 51 PLANTS - (40 LF / 1.95 = 21 PLANTS) = 30 PLANTS TOTAL

F — PLANT SPACING
SCALE: NTS

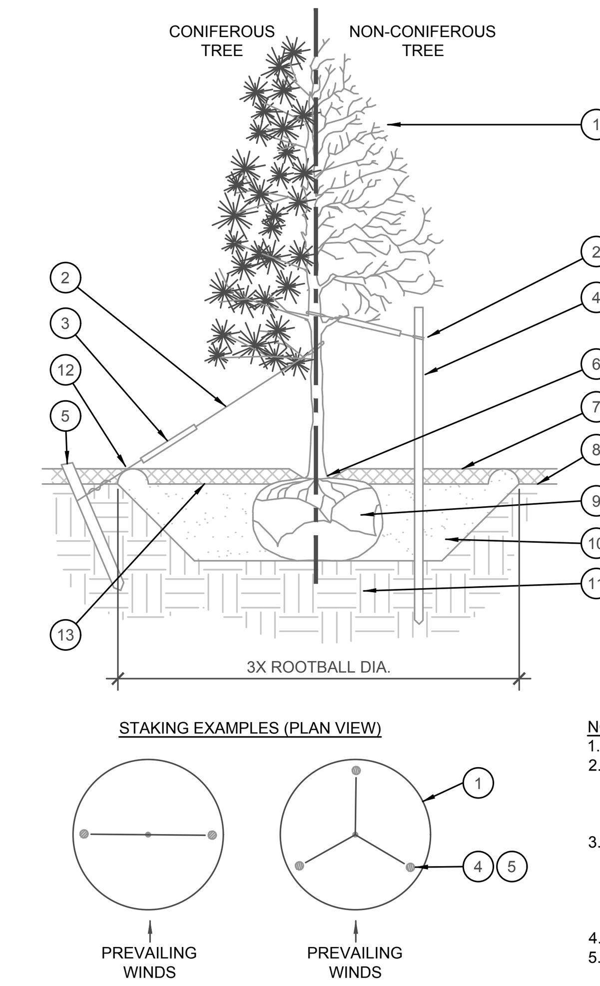

1. TREE CANOPY.
2. CINCH-TIES (24" BOX/2" CAL. TREES AND SMALLER) OR 12 GAUGE GALVANIZED WIRE WITH NYLON TREE STRAPS AT TREE AND STAKE (36" BOX/2.5" CAL. TREES AND LARGER). SECURE TIES OR STRAPS TO TRUNK JUST ABOVE LOWEST MAJOR BRANCHES.
3. 24" X 3/4" P.V.C. MARKERS OVER WIRES.
4. GREEN STEEL T-POSTS. EXTEND POSTS 12" MIN. INTO UNDISTURBED SOIL.
5. PRESSURE-TREATED WOOD DEADMAN, TWO PER TREE (MIN.). BURY OUTSIDE OF PLANTING PIT AND 18" MIN. INTO UNDISTURBED SOIL.
6. TRUNK FLARE.
7. MULCH, TYPE AND DEPTH PER PLANS. DO NOT PLACE MULCH WITHIN 6" OF TRUNK.
8. FINISH GRADE.
9. ROOT BALL.
10. BACKFILL. AMEND AND FERTILIZE ONLY AS RECOMMENDED IN SOIL FERTILITY ANALYSIS.
11. UNDISTURBED NATIVE SOIL.
12. 4" HIGH EARTHEN WATERING BASIN.
13. FINISH GRADE.

NOTES:
1. SCARIFY SIDES OF PLANTING PIT PRIOR TO SETTING TREE.
2. REMOVE EXCESS SOIL APPLIED ON TOP OF THE ROOTBALL THAT COVERS THE ROOT FLARE. THE PLANTING HOLE DEPTH SHALL BE SUCH THAT THE ROOTBALL RESTS ON UNDISTURBED SOIL, AND THE ROOT FLARE IS 2"-4" ABOVE FINISH GRADE.
3. FOR B&B TREES, CUT OFF BOTTOM 1/3 OF WIRE BASKET BEFORE PLACING TREE IN HOLE, CUT OFF AND REMOVE REMAINDER OF BASKET AFTER TREE IS SET IN HOLE, REMOVE ALL NYLON TIES, TWINE, ROPE, AND OTHER PACKING MATERIAL. REMOVE AS MUCH BURLAP FROM AROUND ROOTBALL AS IS PRACTICAL.
4. REMOVE ALL NURSERY STAKES AFTER PLANTING.
5. FOR TREES 36" BOX/2.5" CAL. AND LARGER, USE THREE STAKES OR DEADMEN (AS APPROPRIATE), SPACED EVENLY AROUND TREE.
6. STAKING SHALL BE TIGHT ENOUGH TO PREVENT TRUNK FROM BENDING, BUT LOOSE ENOUGH TO ALLOW SOME TRUNK MOVEMENT IN WIND.

A — TREE PLANTING
SCALE: NOT TO SCALE

1. CURB.
2. MULCH LAYER.
3. PLANT.
4. TURF (WHERE SHOWN ON PLAN).

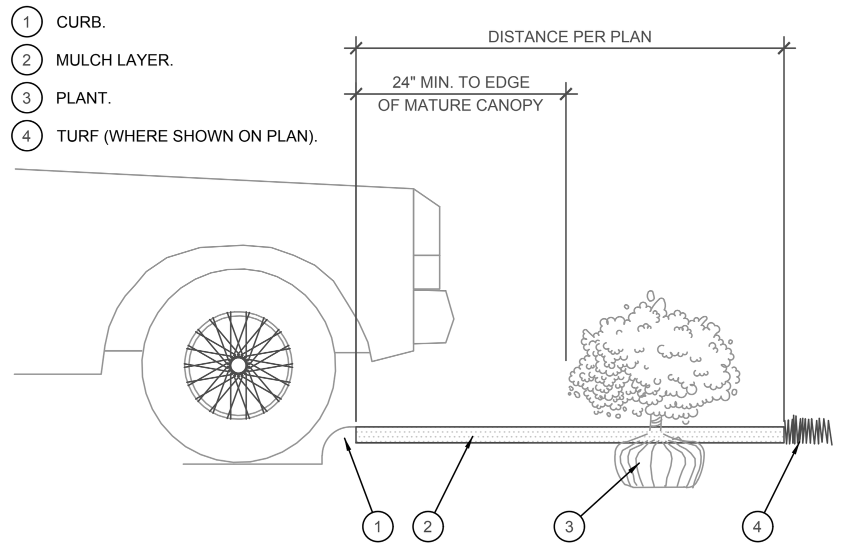

B — PLANTING AT PARKING AREA
SCALE: NOT TO SCALE

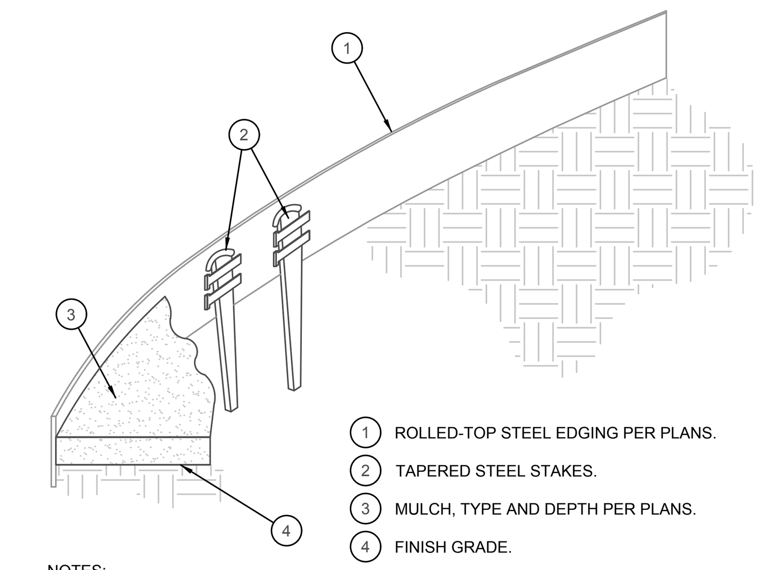

1. ROLLED-TOP STEEL EDGING PER PLANS.
2. TAPERED STEEL STAKES.
3. MULCH, TYPE AND DEPTH PER PLANS.
4. FINISH GRADE.

NOTES:
1) INSTALL EDGING SO THAT STAKES WILL BE ON INSIDE OF PLANTING BED.
2) BOTTOM OF EDGING SHALL BE BURIED A MINIMUM OF 1" BELOW FINISH GRADE.
3) TOP OF MULCH SHALL BE 1" LOWER THAN TOP OF EDGING.

C — STEEL EDGING
SCALE: NOT TO SCALE

National Presence. Local Expertise.
EVERGREEN DESIGN GROUP
800.680.6630
www.evergreendesigngroup.com
LANDSCAPE ARCHITECTURE
LAND PLANNING · IRRIGATION DESIGN

BOHLER
SITE CIVIL AND CONSULTING ENGINEERING
LAND SURVEYING
PROGRAM MANAGEMENT
LANDSCAPE ARCHITECTURE
SUSTAINABLE DESIGN
PERMITTING SERVICES
TRANSPORTATION SERVICES

THE INFORMATION, DESIGN AND CONTENT OF THIS PLAN ARE PROPRIETARY AND SHALL NOT BE COPIED OR USED FOR ANY PURPOSE WITHOUT PRIOR WRITTEN AUTHORIZATION FROM BOHLER. ONLY APPROVED, SIGNED AND SEALED PLANS SHALL BE UTILIZED FOR CONSTRUCTION PURPOSES
© BOHLER

REVISIONS

REV	DATE	COMMENT	DRAWN BY / CHECKED BY
0	08/27/26	ISSUED FOR BID	MFR / SEL

811
Know what's below. Call before you dig.
TEXAS
YOU MUST CALL 811 BEFORE ANY EXCAVATION WHETHER IT'S ON PRIVATE OR PUBLIC LAND.
1-800-344-8377
www.texas811.org

PRELIMINARY

THIS DRAWING IS INTENDED FOR MUNICIPAL AND/OR AGENCY REVIEW AND APPROVAL. <u>IT IS NOT INTENDED AS A CONSTRUCTION DOCUMENT</u> UNLESS INDICATED OTHERWISE.

PROJECT No.:	----
DRAWN BY:	GL
CHECKED BY:	CS
DATE:	07/28/2026
CAD I.D.:	TBLOCK.DWG

PROJECT:

CONSTRUCTION DOCUMENTS

— FOR —

..\..\..\Resources\Images\EOC LOGO.png

PROPOSED
MINOR AUTOMOTIVE REPAIR

SW CORNER OF US 380 & FM 720
CROSS ROADS, TX 76227
LOT 11R, BLOCK A

BOHLER
2600 NETWORK BLVD., SUITE 310
FRISCO, TX 75034
Phone: (469) 458-7300
TX@BohlerEng.com
TBPE NO. 18065 | TBPLS NO. 10194413

REGISTERED LANDSCAPE ARCHITECT
GAVIN W. LOFSTEDT
3428
STATE OF TEXAS
07/28/2026

SHEET TITLE:

LANDSCAPE DETAILS & SPECIFICATIONS

SHEET NUMBER:

LP-2

ORG. DATE - 07-28-26

Jul 27, 2026
/TMP/ACPUBLISH_5525/EXPRESS OIL_CROSS ROADS TX_LP----->LAYOUT: LP-2

EXPRESS OIL CHANGE & TIRE ENGINEERS

SINGLE BUILDING / RIGHT HAND OIL CHANGE/ REAR ENTER / SIDE TIRE STORAGE

4762 FM 720
CROSS ROADS, TEXAS 76227

ATTENTION AUTHORITY HAVING JURISDICTION

Notice is hereby given that Aho Architects, LLC, the Architect of Record on the above referenced project, will be providing construction administration services on a limited basis, supplemented by a third-party independent engineering consulting service as described below.

This project has been designed by the Architect and Engineers ("Design Team") for its specific location, or adapted from prototypical designs, to comply with the following codes, ordinances, and similar requirements adopted by the Authority Having Jurisdiction ("AHJ"):

- **See codes listed on Sheet LS100.**

During the Construction Administration Phase of the Project:

- General: The Design Team will respond to inquiries or requests from the Owner or Contractor, specifically related to documents prepared by the Design Team. As is standard in Construction Law and Professional Service Agreements, the Design Team shall not have control over, charge of, or responsibility for the construction means, methods, techniques, sequences or procedures, or for safety precautions and programs in connection with the Project(s), nor shall the Architect be responsible for the Owner's or Contractor's failure to perform the work in accordance with the requirements of the Permit Set Documents. The Architect shall be responsible for the Architect's negligent acts or omissions, but shall not have control over or charge of, and shall not be responsible for, acts or omissions of the Owner, Contractor, or of any other persons or entities performing portions of the work.
- Experienced Contractor: The Owner will use experienced and licensed Contractors familiar with the construction of Projects of this type and in similar locations, and experienced with the applicable building codes, selection of materials and systems, and methods of installation and construction; and able to implement the Permit Set Documents through completion of the Project(s).
- Submittals: The Design Team's Basic Construction Administration Services include review of critical submittals (e.g. shop drawings) by engineering disciplines (Structural). The Design Team shall also review, approve or take other appropriate action on any submittal for which the AHJ requires approval by the Architect/Engineer, as Additional Services.
- Site Visits: The Architect and Design Engineers typically will not be making any site visits unless specifically required to do so.
  - The Owner has been advised and acknowledges that some States and AHJs require the Architect to perform at least some site visits or provide a notice such as this statement.
  - In consideration of this, the Owner will provide site visits, observation, testing, and related work by a third party independent engineering consulting service:
    - The Owner has an agreement with Terracon, a provider of geotechnical, environmental, construction materials and facilities engineering
    - Experienced Professional Engineers or field technicians under the responsible control of a Professional Engineer will perform site observation, construction materials testing, and required Special Inspections (per IBC Chapter 17; see Schedule of Special Inspections on structural drawings provided) including review of construction for conformance with the permit drawings, supplemental drawings, shop drawings/submittals, and similar relevant documents. Written reports shall be provided, with the Design Team included on the distribution list and involved in resolving any deficiencies noted or other items requiring the Design Team's input.
  - If the above provisions are not acceptable to the AHJ and the AHJ gives notice requiring the Architect to make site visit(s), the Owner has agreed to authorize the Architect's Additional Services and Reimbursable Expenses to comply with the AHJ's requirements.

If you have any questions, or if there is anything else we can do for you, please do not hesitate to contact April Cain, the project manager or Tim Aho, Architect at the address/phone listed below, or by email at HYPERLINK "mailto:acain@ahoarch.com" acain@ahoarch.com or HYPERLINK "mailto:taho@ahoarch.com" taho@ahoarch.com . Thank you very much, and we appreciate the opportunity to be involved in this project in your jurisdiction.

*Image above is generic. See Civil for actual site conditions.

**See Material Schedule & Finish Schedule for Additonal Items for actual paint/material colors.

Note:

Owner responsible for reviewing all non-structural submittals / shop drawings.GC shall send the following submittals / shop drawings to the Structural Engineer for review:

Structural Steel (not including stairs)
Bar Joist
Rebar
Metal Deck
Concrete Mix Design

Note:

Full exterior wall mock-up required for Owner's approval prior to ordering materials. No exceptions.

ARCHITECT

AHO ARCHITECTS, LLC
1855 DATA DRIVE, SUITE 150
HOOVER, ALABAMA 35244
205-983-6000

CIVIL ENGINEER

BOHLER ENGINEERING
2600 NETWORK BLVD, SUITE 310
FRISCO, TX 75034
469-458-7300

STRUCTURAL ENGINEER

BARNETT-JONES-WILSON, LLC
125 18TH STREET NORTH
PELL CITY, ALABAMA 35125
205-884-5334

MECHANICAL / PLUMBING ENGINEER

PINNACLE ENGINEERING, INC.
2031 SHADY CREST DRIVE
HOOVER, ALABAMA 35216
205-733-6912

ELECTRICAL ENGINEER

GIDEON WAMAE, P.E.
4120 OVERLOOK CIRCLE
TRUSSVILLE, ALABAMA 35173
205-413-4112

FINAL

AHO ARCHITECTS, LLC
www.ahoarch.com

REGISTERED ARCHITECT TIMOTHY A. AHO 25347 STATE OF TEXAS
08/12/2026

Express Oil Change & Tire Engineers
Single Building / Right Hand Oil Change / Rear Enter / Side Tire Storage
Cross Roads, Texas (Aubrey)

FINAL

No.	Description	Date
IFP-0	Issue for permit	06/30/2026
IFB-0	Iss. for Bid / AHJ Rev.	08/12/2026

© 2026 Aho Architects, LLC. All Rights Reserved.

Title Sheet

Project number	26013
Date	06/30/2026
Drawn by	ARC
Checked by	N/A

T100

Scale 12" = 1'-0"

9/1/2026 1:41:09 PM

SUMMARY OF CHANGES

PROTOTYPE CHANGES

NO.	DESCRIPTION	NO.	DESCRIPTION
1.	No Pit Ladder		
2.	Fire Suppression		
3.	Structural Slab w/ Drilled Piers		

ISSUE FOR PERMIT CHANGES

ISSUED	REVISION #	DESCRIPTION	REVISED SHEETS	ISSUED	REVISION #	DESCRIPTION	REVISED SHEETS
06/30/2026	IFP-0	Issued for Permit	N/A				

ISSUE FOR BID CHANGES

ISSUED	REVISION #	DESCRIPTION	REVISED SHEETS	ISSUED	REVISION #	DESCRIPTION	REVISED SHEETS
08/12/2026	IFB-0	Issued for Bid/AHJ Comment Revision: Fire Sprinkler Riser Room Added. Foundation Changed to Stem Wall. Wood blocking added at roof /wall details.	G202, LS102, A100/02/04/06/07, A201, A300/2/4, A610/20				

ISSUE FOR CONSTRUCTION CHANGES

ISSUED	REVISION #	DESCRIPTION	REVISED SHEETS	ISSUED	REVISION #	DESCRIPTION	REVISED SHEETS

AHO ARCHITECTS, LLC
www.ahoarch.com

REGISTERED ARCHITECT
TIMOTHY A. AHO
25347
STATE OF TEXAS
08/12/2026

Express Oil Change & Tire Engineers
Single Building / Right Hand Oil Change / Rear Enter / Side Tire Storage
Cross Roads, Texas (Aubrey)

FINAL

No.	Description	Date
IFP-0	Issue for permit	06/30/2026
IFB-0	Iss. for Bid / AHJ Rev.	08/12/2026

© 2026 Aho Architects, LLC.
All Rights Reserved.

Summary of Changes

Project number	26013
Date	06/30/2026
Drawn by	MB
Checked by	ARC

G100

Scale 12" = 1'-0"

9/1/2026 1:41:09 PM

GENERAL PROJECT NOTES

1. These documents are considered accurate and true to the best knowledge of the Architect at this time, but do not necessarily represent, nor are they intended to represent, actual existing conditions, dimensions, and tolerances. Contractor shall field-verify existing conditions including, but not limited to materials, construction, elevations, and dimensions prior to bidding and undertaking the work. Items of concern shall be brought to the attention of the Architect. Submittal of a proposal (bid) by a Contractor and their Subcontractors shall constitute an acknowledgement and confirmation of having complied with these requirements.
2. All work shall comply with all applicable local, state, and national codes, rules, ordinances and regulations and authorities having jurisdiction.
3. The Contractor shall comply with all applicable provisions of the specifications, including, but not limited to all general conditions, supplementary general conditions, special conditions, and material and construction provisions, which apply to materials or construction methods required by this project.
4. Where warranties are concerned, Contractor shall follow manufacturer 's standards and recommendations unless specifically directed otherwise. Any conditions which might negatively affect the warranty shall be brought to the attention of the Architect in advance.
5. The Owner and Contractor shall promptly report to the Architect any defects, suspected defects, or discrepancies in the Architect 's work or services of which the Owner or Contractor may become aware, so that the Architect may take measures to minimize the consequences of such a defect. Failure to notify the Architect shall relieve the Architect of costs of remedying the defects above the sum such remedy would have cost had prompt notification been given.
6. Neither the professional activities of the Architect, nor the presence of the Architect or its employees and consultants at a construction site shall relieve the Contractor or others of their obligations, duties, and responsibilities including, but not limited to: construction means and methods, sequence, techniques, or procedures necessary for performing, superintending, or coordinating all portions of the work in accordance with the contract documents and any health and safety precautions required by agencies having jurisdictional authority over the project. The Architect and its personnel have no authority to exercise control over any Contractor or other entity or their employees in connection with their means, methods, or safety precautions. The Contractor is solely responsible for jobsite safety. The Owner, Architect, and their Consultants shall be indemnified and shall be made additional insureds under the Contractor 's general liability insurance policy.
7. All work, unless specifically indicated otherwise, shall be the responsibility of the General Contractor and shall be performed by the tradesmen skilled in the required field.
8. “Provide” shall mean to furnish and install, complete and ready for intended use.
9. Provide pressure treated wood where in contact with concrete or masonry.
10. The Contractor shall be responsible for all cutting, fitting, and patching that may be required to complete the work.
11. Dimensions of existing construction and repetitive dimensions are sometimes omitted. Detailed dimensions not indicated may be found on large-scale drawings of the same areas. Drawings are intended to reflect the existing conditions as closely as possible, however, the Contractor shall field verify and accept all existing conditions and dimensions. Notify Architect of any discrepancies affecting the work.
12. Provide all temporary services required to facilitate the work indicated, including but not limited to the following: power, lighting, heat, and water.
13. The Contractor(s) shall provide all barriers, shoring, warning lights, etc. as required to conduct the work and maintain the site in a safe condition consistent with good construction practices and with all applicable rules and regulations.
14. All exist. utility services including domestic water, sanitary sewer, electricity, fuel oil and/or gas shall be disconnected and made safe prior to any demolition work. Any work which might require interruption of utility services to Owner or other tenants, shall be approved and coordinated beforehand with the Owner.
15. It is the intent of the bid and construction documents to indicate complete and fully operational systems (i.e. structural, HVAC, plumbing, electrical, roofing, etc.). The Contractor shall provide operational systems and testing which comply with applicable codes, regulations, and requirements of authorities having jurisdiction.
16. Any work or utility outages which might disrupt the operations of the Owner or others shall be approved and coordinated in advance with the Owner and the Architect. The Contractor shall give the Owner and Architect at least three days advance notice prior to undertaking work which might cause disruption. Activities which produce utility outages, excessive noise, dust and other disruption shall be coordinated with the Owner and Architect. Some of these activities may need to occur at “off hours” to minimize disruption of the Owner’s operations.
17. All wood blocking, trim, decking, etc. shall be decay-resistant treated, or as specified.
18. To prepare substrate for all wall mounted items, wall fixture, toilet accessories, etc. - fill all voids in the CMU surface to provide a sound base (provide blocking in stud walls) for all new wall mounted items, fixtures, etc. Install per manufacturer's specifications and recommendations.
19. Do not paint any caulking or sealants which are subject to movement. Control joints shall be caulked after paint and special coating applications. Provide caulking or sealants in colors which match adjacent finished surface as approved by the Architect.
20. Bidders shall be responsible for obtaining a copy of the Geotech Report from the Owner.
21. The project may include some items that are delegated design. Bidders shall ensure these items are covered in their base bid.
22. All questions that affect cost, time, etc. shall be presented in the form of RFI's to the Architect prior to bid.

ENERGY CODE EXEMPTION

Per 2021 International Energy Conservation Code:

C402.1.1 Low Energy Buildings and Greenhouses. The following low-energy buildings, or portions thereof, separated from the remainder of the building by building thermal envelope assemblies complying with this section, shall be exempt from the building thermal envelope provisions of Section C402:

1. Those with a peak design rate of energy usage less than 3.4 Btu/h x ft2 or 1.0 watt/ft2 of floor area for space conditioning purposes.
2. Those that do not contain "conditioned space".

Per Chapter 2:
Definition of Conditioned Space: An area, room or space that is **enclosed** within the building thermal envelope and is directly or indirectly heated or cooled. Spaces are indirectly heated or cooled where they communicate through openings with conditioned spaces, where they are separated from conditioned spaces by uninsulated walls, floors, or ceilings, or where they contain uninsulated ducts, piping or other sources of heating or cooling.

While the Oil Change & Service areas do have gas fired unit heaters, during normal operations, the Oil Change, Service, and Pit areas are **not enclosed** and are outside the building thermal envelope assembly. These areas are separated from the remainder of the building by building thermal envelope assemblies complying with this code. Therefore, these areas shall be exempt from the building thermal envelope provisions of this code.

GENERAL ACCESSIBILITY NOTES

1. All door hardware shall be accessible type per section 404 of the 2017 ICC A117.1 / 2010 ADA Standards.
2. All walking surfaces shall have a maximum slope of 1:20 per section 405 of the 2017 ICC A117.1 / 2010 ADA Standards
3. All floor or ground surfaces shall be stable, firm, and slip resistant per section 302 of the 2017 ICC A117.1 / 2010 ADA Standards
4. Changes in level of 1/4" high maximum shall be permitted to be vertical per section 303 of the 2017 ICC A117.1 / 2010 ADA Standards
5. Provide maneuvering clearances at manual swinging doors per section 404 of the 2017 ICC A117.1 / 2010 ADA Standards
6. ADA mounting heights, dimensions, tolerances, etc. shall apply to all construction and the location of all fixtures, etc. unless specifically noted otherwise.

GENERAL INTERIOR NOTES

1. Quantities (area, perimeter, etc.) shown on finish schedule are approximate and are provided as a convenience to the Contractor. Actual quantities may vary and it is the responsibility of the Contractor to field verify.
2. Anything specified with a directional pattern (e.g. brushed aluminum, wood grain laminate, etc.) the pattern shall go in the same direction as directed by Architect.
3. The Contractor shall provide all necessary blocking in walls for support of all equipment, shelving, accessories, grab bars, wall hung lavatories, and other required elements.
4. Provide pressure treated wood where in contact with concrete or masonry.
5. Ease all edges on casework to prevent sharp corners.
6. Paint all HVAC wall grilles to match adjacent surface color unless otherwise noted or instructed by the Architect.
7. Use moisture resistant gypsum board at all walls subject to moisture unless wall will be subject to standing water or frequent wetting in which case you shall use cementitious backer.
8. Provide thresholds where required. All shall be ADA compliant.
9. All gypsum board to have a level 4 finish unless otherwise indicated.

BIDDING INQUIRES

Company:	Express Oil Change
Contact:	Chris Plummer
E-Mail:	chris.plummer@expressoil.com
Phone:	205-945-1771
Note:	Sub-contractors to call bidding General Contractor for questions

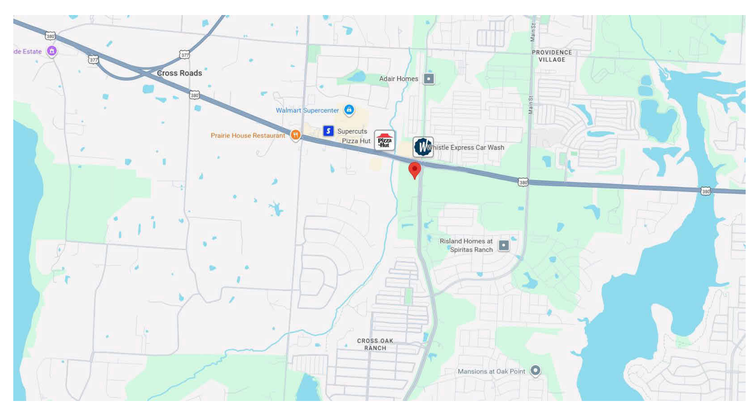

Express Oil Change & Tire Engineers
4762 FM 720
Cross Roads, Texas 76227

NORTH

Sheet Index

Sheet Number	Sheet Name
T100	Title Sheet
G100	Summary of Changes
G101	General Information
G200	Architectural Specifications
G201	Architectural Specifications
G202	Architectural Specifications
G300	Architectural Specifications & EOC Standards - Exterior
G301	EOC Standards - Interior
G400	Building COMCheck
LS101	Life Safety / Code Summary
LS102	Life Safety Plan - Main
LS103	Life Safety - Pit
AS100	Architectural Site Plan
A100	Floor Plan - Main
A101	Pit Floor Plan and Site Details
A102	Foundation Details
A103	Enlarged Floor Plans and Details
A104	Reflected Ceiling Plan - Main
A105	Reflected Ceiling Plan - Pit
A107	Roof Plan
A106	Floor Plan - Platform
A200	Exterior Elevation - False Front (West)
A201	Exterior Elevation - Rear Entry (East)
A202	Exterior Elevation - Right (South)
A203	Exterior Elevation - Left (North)
A300	Building Sections
A301	Building Sections
A302	Building Sections
A303	Building Sections
A304	Wall Sections and Details
A400	Wall Types
A600	Interior Elevations
A601	Interior Elevations
A602	Interior Elevations
A605	Interior Dimensional Info.
A610	Floor Finishes - Main
A611	Floor Finishes - Pit
A620	Schedules
A621	Finish Schedules & Head, Jamb, and Sill Details
R100	3D Views
R101	3D Views
S0.1	General Notes & Schedule of Special Inspections
S0.2	Typical Details
S0.3	Schedules
S1.1	Foundation Plan
S3.1	Roof Framing Plan
S5.1	Sections and Details
S5.2	Sections and Details
S5.3	Sections and Details
S5.4	Sections and Details
M0.01	Mechanical Legend, Abbreviations and Schedules
M0.02	Mechanical Specifications
M0.03	Mechanical Specifications
M0.04	Mechanical ComCheck
M1.01	Mechanical Floor Plan
M1.02	Partial Mechanical Floor Plans - Pit and Platform
M1.03	Mechanical Roof Plan
M2.01	Mechanical Details
M2.02	Mechanical Details
P0.01	Plumbing Legend, Abbreviations, and Schedules
P0.02	Plumbing Specifications
P0.03	Plumbing Specifications
P1.01	Plumbing Floor Plan - Gravity
P1.02	Plumbing Floor Plan - Pressure
P1.03	Partial Plumbing Plans - Pit and Platform
P2.01	Gravity Riser
P2.02	Pressure Riser
P3.01	Plumbing Details
E100	General Notes and Fixture Schedules
E101	Symbol Legends and Details
E102	Single Line Diagram and Panelboard Schedules
E103	Details
E104	Site Plan - Electrical
E200	Main Level Plan - Lighting
E201	Pit Level Plan - Lighting
E300	Main Level Plan - Power & Voice/Data
E301	Pit Level Plan - Power & Voice/ Data
E400	Main Level Plan - Elec. Conn. to Mech.
E401	Roof Plan - Electrical Connection to Mechanical
E500	Specifications
E600	ComCheck

AHO ARCHITECTS, LLC
www.ahoarch.com

REGISTERED ARCHITECT
TIMOTHY A. AHO
25347
STATE OF TEXAS
08/12/2026

Express Oil Change & Tire Engineers
Single Building / Right Hand Oil Change / Rear Enter / Side Tire Storage
Cross Roads, Texas (Aubrey)

FINAL

No.	Description	Date
IFP-0	Issue for permit	06/30/2026
IFB-0	Iss. for Bid / AHJ Rev.	08/12/2026

© 2026 Aho Architects, LLC.
All Rights Reserved.

General Information

Project number	26013
Date	06/30/2026
Drawn by	ARC
Checked by	N/A

G101

Scale 12" = 1'-0"

9/1/2026 1:41:10 PM

GENERAL NOTES

1. GENERAL CONTRACTOR SHALL ENSURE EACH OF THE FOLLOWING HAVE BEEN REVIEWED BY THE MANUFACTURER FOR COMPLIANCE WITH LOCAL CONDITIONS/REQUIREMENTS PRIOR TO BIDDING/ORDERING/INSTALLING: ROOFING, DOORS, WINDOWS/STOREFRONT, GLAZING, DOOR HARDWARE, PAINT, AND FIRE EXTINGUISHERS.
2. GENERAL CONTRACTOR SHALL PROVIDE SUBMITTALS / SHOP DRAWINGS FOR EACH PRODUCT LISTED UNDER ARCHITECTURAL SPECIFICATIONS. ALL SUBMITTALS / SHOP DRAWINGS ARE TO BE APPROVED BY THE OWNER AND/OR THE A/E PRIOR TO ORDERING.
3. PROVIDE MANUFACTURER'S STANDARD WARRANTY FOR ALL SPECIFIED PRODUCTS.
4. ALL EXTERIOR SIGNAGE AND SCONCES BY OTHERS.
5. ALL FURNITURE AND EQUIPMENT BY OTHERS. COORDINATE PLACEMENT WITH OWNER PRIOR TO ROUGHING IN REQUIRED UTILITIES.
6. ALL COMPARABLE PRODUCTS TO BE REVIEWED AND APPROVED BY THE OWNER PRIOR TO BID.
7. GC SHALL BE RESPONSIBLE FOR CHECKING WITH THE LOCAL AHJ ON ANY DEFERRED SUBMITTALS THAT MAY BE REQUIRED TO BE APPROVED BY THE AHJ PRIOR TO CONSTRUCTION.

DIVISION 4 - MASONRY

042200 - Concrete Unit Masonry

Basis-of-Design Product: Subject to compliance with requirements, provide products indicated below by Echelon, An Oldcastle Company or a comparable product by an approved manufacturer.

Products

A. Concrete Masonry Units
1. Finish: Smooth and split-face
2. Min. Compressive Strength: See Structural
3. Density Classification: See Structural
4. Provide types, shapes and sizes as indicated
5. Integral Water Repellent: Provide RainBloc 80 by ACM Chemistries or a comparable product by an approved manufacturer.

Basis-of-Design Product: Subject to compliance with requirements, provide products indicated below by Argos or an approved comparable product by an approved manufacturer.

Products

B. Mortar
1. Type: See Structural
2. Color: Standard Gray.
3. Liquid Mortar Additive: Provide RainBloc for Mortar or a comparable product by an approved manufacturer.

Subject to compliance with requirements, provide products indicated below:

Products

C. Joint Reinforcement
1. Type: Hot dipped galvanized, carbon steel (ladder)
2. Size: 0.187" diameter
3. Length: Not less than 10'

*Provide full exterior wall mock-up for Owner's Approval prior to ordering. No Exceptions.

Basis-of-Design Product: Subject to compliance with requirements, provide products indicated below by Mortar Net Solutions or an approved comparable products by an approved manufacturer.

Subject to compliance with requirements, provide products indicated below:

D. Single Wythe Concrete Masonry Unit Drainage System
1. BlockFlash

055000- Metal Fabrications

Products:

A. Concrete-filled Steel Pipe Bollards
1. Material: Schedule 40 steel pipe
2. Height: 3'-6"
3. Diameter: 4"
4. Finish: Painted (See Finish Schedule)

Installation:
See drawings for installation details.

055113- Metal Pan Stairs

Delegated Design: Engage a qualified professional engineer to design stairs and railings and provide sealed calculations and drawings.

Products:

A. Metal Pan Stairs
1. Steel Sheet Thickness: 0.067" minimum
2. Uniform Load: 100 lbf/sf
3. Concentrated Load: 300 lbf applied on an area of 4 sq. in.
4. Finish: Painted (See Finish Schedule)
5. Uniform and concentrated loads need not be assumed to act concurrently.
6. Stair Framing: Capable of withstanding stresses resulting from railing loads in addition to loads specified above.

B. Stair Tread Bar Ribbed Abrasive Nosing
1. Basis of Design: Nystrom Model V951
2. Extents: Install Nosing to the full length of steps
3. Color: Safety Yellow
4. Type: Short Nose, Aluminum Extruded Anchor

C. Stair Railings
1. Rails and Posts: 1 1/2" diameter
2. Picket Infill: 1/2" round pickets spaced less than 4 inches clear.

D. Installation: Install per manufacturer's standard written instructions.

E. Warranty: Provide manufacturer's standard material warranty.

055133 - Ladders

Manufacturers:
Basis-of-Design Product: Subject to compliance with requirements, provide products indicated below by Grainger, or a comparable product by an approved manufacturer:

055133 - Ladders (continued)

Product:

A. Fixed Welded-Steel Ladder by Grainger
1. Model F9S C1 Cotterman Fixed (Roof Ladder)
   a. Width: 20 inches
   b. Height: 9 feet

Installation:
Install ladder according to manufacturer's written instructions.

055213- Pipe and Tube Railings

Delegated Design: Engage a qualified professional engineer to design stairs and railings and provide sealed calculations and drawings.

A. Handrails & Top Rails of Guards
1. Rails and Posts: 1 1/2" diameter
2. Uniform Load: 50lbf/ft in any direction.
3. Concentrated Load: 200 lbf applied in any direction
4. Uniform and concentrated loads need not be assumed to act concurrently.
5. Type: F or S
6. Material: Schedule 40
7. Finish: Painted (See Finish Schedule)
8. Seismic Performance: See Structural

B. Infill of Guards
1. Concentrated Load: 50 lbf applied horizontally on an area of 1 SF.
2. Infill load and other loads need not be assumed to act concurrently.

Installation:
Install stairs and railings according to manufacturers' written instructions and with welded connections.

DIVISION 6 - WOOD, PLASTICS AND COMPOSITES

061000- Rough Carpentry

Products:

A. Framing with Dimensional Lumber (Interior Non-Load-Bearing)
1. Thoroughly Dried
2. No. 2 Southern Yellow Pine or No. 2 Douglas Fir
3. Of sizes, shapes, and lengths required.
4. Moisture content shall not exceed 19% at time of installation

B. Miscellaneous Lumber (e.g. Blocking, Furring, etc.)
1. Thoroughly Dried
2. No. 2 Southern Yellow Pine or No. 2 Douglas Fir
3. Of sizes, shapes, and lengths required.
4. Moisture content shall not exceed 19% at time of installation

C. Temporary Bracing, Shoring, etc. as required
1. Thoroughly Dried
2. No. 2 Southern Yellow Pine or No. 2 Douglas Fir
3. Of sizes, shapes, and lengths required.
4. Moisture content shall not exceed 19% at time of installation

D. Plywood decking (Platform)
1. Plywood Type: Exposure 1
2. Plywood Grade: BC
3. Thickness: As indicated on drawings
4. Square Edge
5. Class: C Fire Rating
6. Flame Spread Rating 76-200 / Smoke Developed Index <450

E. Plywood decking (Roof / Sheathing)
1. Plywood Type: Exposure 1
2. Plywood Grade: BC
3. Thickness: As indicated on drawings
4. Square Edge

Note:
1. All plywood which has any edge or surface permanently exposed to the weather shall be of the exterior type.
2. All wood exposed to weather and/or in contact with masonry or concrete shall be pressure-treated lumber.

061533- Composite Decking

Products

A. Plastic Decking for Dumpster Enclosure Doors
1. Composite plastic lumber
2. Solid shapes made from a mixture of cellulose fiber and polyethylene or polypropylene.
3. Surface Texture: Smooth.
4. Color: See Finish Schedule.
5. Size: See dumpster details.

Installation:
Install plastic decking according to manufacturers' written instructions.

Warranty:
Provide manufacturer's standard material warranty.

066400 Plastic Paneling (Fiberglass Reinforced Panels)

Basis-of-Design Product: Subject to compliance with requirements, provide products indicated below by Marlite Wall Systems, or a comparable product by one of the following:

1. Kal-Lite
2. Crane Composites
3. Panolam

Product Requirements:

A. Provide standard FRP (Fiber Reinforced Plastic) panels in 4' x 8' textured panels.
B. Color: As indicated on the Finish Schedule.
C. Conform to all building code requirements for interior finish for smoke and flame spread requirements tested in accordance with ASTM 84
D. Wall required Rating - Class A

Submittals:
Submit shop drawings (elevations of each wall) showing location of paneling and trim members.

Installation:
A. Install per manufacturer's written standards.

Warranty:
A. Provide manufacturer's standard warranty.

DIVISION 7 - THERMAL AND MOISTURE PROTECTION

071900- Water Repellents

Basis-of-Design Product: Subject to compliance with requirements, provide products indicated below by Ghostshield or a comparable product from an approved manufacturer.

DIVISION 7 - THERMAL AND MOISTURE PROTECTION (continued)

Products

A. Water Repellant
1. ISO-Tek 8540
2. Color: Clear

Installation: Install water repellents according to manufacturers' written instructions.

Warranty: Provide manufacturers' standard product warranty.

072100- Thermal Insulation

Basis-of-Design Product: Subject to compliance with requirements, provide products indicated below by Owens Corning, or a comparable product by one of the following:

1. Johns Manville
2. CertainTeed

Products:

A. Kraft Faced (Vapor Retarder) Batt Insulation:
1. EcoTouch PINK Fiberglass Insulation
2. R-20 & R-38; where indicated

B. Continuous Rigid Insulation (wall):
1. R-7.6ci; where indicated

Installation:
Install insulation and accessories according to manufacturers' written instructions.

Warranty:
Provide manufacturers' standard material warranty.

072400 Exterior Insulation and Finish System

Basis-of-Design Product: Subject to compliance with requirements, provide products indicated below by Dryvit Systems, Inc, or a comparable product by an approved manufacturer.

Products: Dryvit Systems, Inc., One Energy Way, West Warwick, RI 02893, 800-556-7752, www.dryvit.com.

A. Molded, (Expanded) Rigid Cellular Polystyrene Board Insulation (Pre-Wrapped / Pre- base coated Architectural Shapes): Comply with ASTM E 2430/E 2430M.

Provide pre-coated architectural shapes which include base coat and reinforcing mesh provided.

1. Cornice Shape: Product number 205C166 604
2. Trim: Product number 205T154 604

System Description:

A. The Dryvit Direct Apply is an Exterior Insulation and Finish System (EIFS):
1. Water-resistive barrier membrane (for use at EIFS only): Basis-of-Design: Backstop NTX
2. Adhesive: Basis-of-Design, as per Manufacturer's recommendation: Chemex-Pro. Installed in vertical ribbons to facilitate egress of incidental moisture
3. Rigid expanded polystyrene insulation board.
4. Base Coat (included in pre-coated shapes)
5. Reinforcing Mesh (included in pre-coated shapes)
6. Finish Coat
7. Flashing materials

B. Pre-Installation Requirement: Contractor is to provide a mock-up of EIFS Finish for Owner's approval. This is required. No Exceptions.

C. Installation:
1. Install on clean and dry unpainted brick, concrete or masonry, free of loose material and irregularties in accordance with ASTM C1397 and the Exterior Insulation and Finish System manufacturer's application instructions.
2. Contractor's Option: Install EIFS system using Pre-buck Engineered Framing system for Parapet Cap in lieu of wood framing and plywood as shown in section detail drawing. If using Pre-Buck system, contractor must install per manufacturer's written installation instructions/ requirements.

C. Finish:
1. Freestyle: Fine Texture
2. Color (See Finish Schedule)

Warranty: Provide manufacturer's standard warranty.

072600 Vapor Retarders

Basis-of-Design Product: Subject to compliance with requirements, provide products indicated below by Reef Industries, or a comparable product by an approved manufacturer.

Products:

A. Reinforced Under Slab Vapor Retarder:
1. Griffolyn 10 Mil Green
2. Thickness: 10 mil
3. Max Perm Rating: 0.1 perm
4. Lap: 12" and tape with manufacturer recommended tape

Installation: Install vapor retarders according to manufacturers' written instructions.

Warranty: Provide manufacturers' standard product warranty.

072715 - Self-Adhesive Membrane Air Barrier

Basis-of-Design Product: Subject to compliance with requirements, provide products indicated below by W.R.Meadows, or a comparable product by an approved manufacturer.

Products:

A. Self-Adhesive Air Barrier Sheet Membrane: Fully adhered, sheet membrane, vapor permeable air and water resistive barrier.

1. Air-Shield SMP

B. Self-adhered high-temperature SBS-modified roof underlayment (SBTM D36) compatible with metal roofing.

1. Self-Adhering, High-Temperature Underlayment: Provide self-adhering, cold-applied, sheet underlayment, a minimum of 30 mils (0.76 mm) thick, consisting of slip-resistant, polyethylene-film top surface laminated to a layer of butyl or SBS-modified asphalt adhesive, with release-paper backing. Provide primer when recommended by underlayment manufacturer.
   a. Thermal Stability: Stable after testing at 240 deg F (116 deg C); ASTM D1970.
   b. Low-Temperature Flexibility: Passes after testing at minus 20 deg F (29 deg C); ASTM D1970.

Installation:
Install self adhered membrane air barriers according to manufacturers' written instructions.

Warranty:
Provide manufacturer's standard product warranty.

072726- Fluid-Applied Membrane Air Barrier

Basis-of-Design Product: Subject to compliance with requirements, provide products indicated below by W.R. Meadows, or a comparable product by an approved manufacturer.

072726- Fluid-Applied Membrane Air Barrier (continued)

Products:
A. Liquid Membrane Air/Vapor & Liquid Moisture Barrier
1. Air-Shield LMP

Installation: Install fluid applied membrane air barriers according to manufacturers' written instructions.

Warranty: Provide manufacturer's standard product warranty.

074113.16- Standing-Seam Metal Roof Panels (Standard)

Basis-of-Design Product: Subject to compliance with requirements, provide products indicated below by Berridge Manufacturing Co. or comparable product by an approved manufacturer.

Products:

A. Metal Panel: Cee-Lock

1. Structural Performance: Provide metal panel systems capable of withstanding the effects of the following loads, based on testing according to ASTM E 1592.
   a. Wind Loads: See Structural.
   b. Other Design Loads: See Structural.
   c. Deflection Limits: See Structural.
2. Air Infiltration: Air leakage of not more than 0.06 cfm/sq. ft when tested according to ASTM E 1680 and ASTM E 283 at the following test-pressure difference:
   a. Test-Pressure Difference: 6.24 lbf/sq.ft.
3. Water Penetration under Static Pressure: No water penetration when tested according to ASTM E 1646 and ASTM E 331 at the following test-pressure difference:
   a. Test-Pressure Difference: 15 lbf/sq.ft.
4. Wind-Uplift Resistance: Provide metal roof panel assemblies that comply with UL 580 for wind-uplift-resistance class indicated.
   a. Uplift Rating: UL 90.
5. Thermal Movements: Allow for thermal movements from ambient and surface temperature changes by preventing buckling, opening of joints, overstressing of components, failure of joint sealants, failure of connections, and other detrimental effects.
6. Material: Metallic coated steel
7. Nominal Thickness: 24 gauge
8. Finish: Two-coat fluoropolymer.
9. Color: See Finish Schedule (verify sample with Owner prior to ordering)
10. Panel Coverage: 16.5 inches
11. Panel Height: 1.5 inches
12. Slope: As indicated

B Substrate / Underlayment
1. 5/8" exterior grade plywood with two layer of 15# felt (FL Product Approval #10626.2)

C. Ridge/Hip Cap
1. Provide preformed ridge/hip cap by roofing manufacturer.
2. Color: Match Roof Color.
3. Material: Match Roof.

D. Snowguards
1. Provide snowguards if required by AHJ.

Installation:
Install metal panels, underlayment, vents, and accessories according to manufacturers' written instructions.

Warranty:
Provide manufacturers' standard material and product warranties.

074293 Soffit Panels (Standard)

Basis-of-Design Product: Subject to compliance with requirements, provide products indicated below by James Hardie Building Products, Inc. or a comparable product by an approved manufacturer.

Products:

A. Smooth Vented Soffits

1. Structural Performance: Provide soffit systems capable of withstanding the effects of the following loads:
   a. Wind Loads: See Structural.
   b. Deflection Limits: See Structural.
2. Net Free Area: 5 sq. in. per linear foot.
3. Width: 12"
4. Depth: As indicated on drawings
5. Thickness: 0.25"
6. Color: Painted, (See Finish Schedule)
7. Jointing: Provide paintable PVC "H" Jointer between panels.

Installation:
Install soffit panels and accessories according to manufacturers' written instructions.

Warranty:
Provide manufacturers' standard material warranty.

075423- Thermoplastic Polyolefin (TPO) Roofing:

Basis-of-Design Product: Subject to compliance with requirements, provide products indicated below by Versico or comparable product by an approved manufacturer.

Products:

A. VersiWeld 60 mil TPO fully adhered.

1. ASTM D6878

B. Underlayment: 1/2" Securock Gypsum Fiber Cover Board

C. Polyisocyanurate Insulation

1. Thickness: R-25ci

D. Roof Walkways (if required)

1. VersaWeld Heat Weldable Walkway Rolls

   a. Color: White
   b. Thickness: 180 mils
   c. As an option, walkway rolls may be fully adhered to the membrane surface with QA Seam Tape/ TPO Primer.

Installation: Install TPO, underlayment, insulation, vents, accessories, etc., according manufacturer's published installation instructions.

Warranty: Provide 20 Year NDL Manufacturers full system warranty

AHO ARCHITECTS, LLC
www.ahoarch.com

REGISTERED ARCHITECT TIMOTHY A. AHO 25347 STATE OF TEXAS
08/12/2026

Express Oil Change & Tire Engineers
Single Building / Right Hand Oil Change / Rear Enter / Side Tire Storage
Cross Roads, Texas (Aubrey)

FINAL

No.	Description	Date
IFP-0	Issue for permit	06/30/2026
IFB-0	Iss. for Bid / AHJ Rev.	08/12/2026

© 2026 Aho Architects, LLC. All Rights Reserved.

Architectural Specifications

Project number	26013
Date	06/30/2026
Drawn by	ARC
Checked by	N/A

G200

Scale 12" = 1'-0"

9/1/2026 1:41:12 PM

076200 - Sheet Metal Flashing and Trim (Standard)

Provide products indicated for formed low-slope roof sheet metal fabrications:

A. Copings: Fabricate in minimum 96-inch-long, but not exceeding 12-foot-long, sections. Fabricate joint plates of same thickness as copings. Furnish with continuous cleats to support edge of external leg and interior leg. Miter corners, fasten and seal to be watertight. Shop fabricate interior and exterior corners. Form sheet metal to fit substrates without excessive oil canning, buckling, and tool marks; true to line, levels, and slopes; and with exposed edges folded back to form hems. Conceal fasteners and expansion provisions where possible. Do not use exposed fasteners on faces exposed to view. Form seams and seal joints as required by manufacturer for watertight construction.
1. Fabricate from one of the Following Materials:
a. Galvanized Steel: 0.040 inch thick.
b. Aluminum-Zinc Alloy-Coated Steel: 0.040 inch
2. Fabricate coping cap to include :
a. Face Dimension: 6 inches minimum (Building)
b. Back Dimension: 6 inches minimum (Building)

A. Performance Requirements:
1. Sheet metal flashing and trim assemblies shall withstand wind loads, structural movement, thermally induced movement, and exposure to weather without failure due to defective manufacture, fabrication, installation, or other defects in construction. Completed sheet metal flashing and trim shall not rattle, leak, or loosen, and shall remain watertight.
2. Sheet Metal Standard for Flashing and Trim: Comply with NRCA's "The NRCA Roofing Manual" and SMACNA's "Architectural Sheet Metal Manual" requirements for dimensions and profiles shown unless more stringent requirements are indicated.
3. SPRI Wind Design Standard: Manufacture and install copings and roof edge flashings tested according to SPRI ES-1 and capable of resisting the design pressure as specified on sheets S0.1 and S0.3
4. Thermal Movements: Allow for thermal movements from ambient and surface temperature changes.
a. Temperature Change: 120 deg. F., ambient; 180 deg. F, material surfaces

B. Quality Assurance:
1. Fabricator Qualifications: Employs skilled workers who custom fabricate sheet metal flashing and trim similar to that required for this Project and whose products have a record of successful in-service performance.
a. For copings and roof edge flashings that are SPRI ES-1 tested, shop shall be listed as able to fabricate required details as tested and approved.

C. Sheet Metals:
1. Metallic-Coated Steel Sheet: Provide zinc-coated (galvanized) steel sheet according to ASTM A 653 /A 653M, G90 coating designation or aluminum-zinc alloy-coated steel sheet according to ASTM A 792 /A 792M, Class AZ50 coating designation, Grade 40; prepainted by coil-coating process to comply with ASTM A 755/A 755M.

a. Two-Coat Fluoropolymer: AAMA 621. Fluoropolymer finish containing not less than 70 percent PVDF resin by weight in color coat. Prepare, pretreat, and apply coating to exposed metal surfaces to comply with coating and resin manufacturers' written instructions.
1. Color: See Finish Schedule

C. Warranty:
1. Special Warranty on Finishes: Manufacturer agrees to repair finish or replace sheet metal flashing and trim that shows evidence of deterioration of factory-applied finishes within specified warranty period.
a. Finish Warranty Period: 10 years from date of Substantial Completion.

077100- Roof Specialties (Standard)

Basis-of-Design Product: Subject to compliance with requirements, provide products indicated below by Roof Drainage Components & Accessories, Inc. or a comparable product by an approved manufacturer.

Products:

A. Gutters (alum.):
1. Style:Smooth Box Gutter - "F" Style
2. Size: 5"
3. Color: Match Roof Color

B. Conductor head w/ built-in overflow (alum.): Match downspout color.

C. Downspouts (alum.):
1. Style: Smooth Box Downspout
2. Size: 3"x4"
3. Color: As indicated on Finish Schedule

D. Downspout elbow / boot - Match downspout color

E. Straps
1. Smooth Box Downspout Strap.
2. Color: Match downspout color.

F. Thru-wall scuppers- match downspout color.
1. Size: 8" wide x 8" high

G. Thru-wall emergency roof scuppers with metal sleeve coated in weldable TPO for watertight leak-proof seal.
1. Size 4" wide x 4" high
2. Color: match downspout color.

Basis-of-Design Product: Subject to compliance with requirements, provide products indicated below by Hickman Edge Systems, LLC or comparable product by an approved manufacturer.

Products:

A. Coping Cap (for Dumpster Enclosure only)
1. Product: Permasnap Premier Coping
2. 24 gauge w/ kynar finish
3. Color: See Finish Schedule
4. Face Dimension: 5 inches minimum
5. Back Dimension: 4 inches minimum

Installation: Install roof specialties according to manufacturers' written instructions.

Warranty: Provide manufacturers' standard material warranty.

077233 - Roof Hatch

Basis-of-Design Product: Subject to compliance with requirements, provide products indicated below by Babcock -Davis or a comparable product by an approved manufacturer.

Product:

A. Roof Hatch

1. Model: BRHUA30X54S1T (BA3054)
2. Size: 30 inch x 54 inch
3. Accessories:
a. Provide manufacturer's standard safety post for installation on fixed ladders mounted below hatch cover. Tubular post shall lock when fully extended. Release lever shall disengage the post to allow it to return to a lowered position.

Installation:
Install roof specialties according to manufacturers' written instructions.
Coordinate installation with installation of roof deck, structure, roofing membrane and base flashing.
Coordinate installation of sealant and roofing cement with work of this section to ensure water tightness.

Warranty:
Provide manufacturers' standard material warranty for hatch and all accessory items.

078443 - Joint Firestopping

Basis-of-Design Product: For joints in or between Fire-Resistance-Rated Construction: Subject to compliance with requirements, provide products indicated below by Tremco, or a comparable product by one of the following:

1. 3M Fire Protection Products
2. Owens Corning
3. Hilti, Inc.
4. ROCKWOOL

A. Scope: Work specified under this Section includes all labor, materials, equipment, services, accessories and coordination as required to furnish and install all firestopping systems including but not limited to, the following:
1. Firestopping sealant, firesafing and material required to render all fire rated assemblies fire and smoke tight in accordance with applicable codes, ordinances and requirements.
2. Penetrations of fire rated materials or assemblies shall be sealed by the trade whose work required the penetration, unless a firestop contractor is designated by the Contractor

B. System Description/ Design Requirements:
1. Fire-Rated Construction: Maintain vertical and horizontal barrier, structural floor-ceiling, and roof-ceiling fire resistance ratings at all penetrations, connections with other surfaces or types of construction, at separations required to permit building movement and sound or vibration absorption, and at other construction gaps.
2. Smoke Barrier Construction: Maintain vertical barrier and structural floor resistance to cold smoke at all penetrations, connections with other surfaces and types of construction and at all separations required to permit building movement and sound or vibration absorption, and at other construction gaps.
Provide products that upon curing, do not re-emulsify, dissolve, leach, breakdown or otherwise deteriorate over time from exposure to atmospheric moisture, sweating pipes, ponding water or other forms of moisture.
4. Provide firestop products that do not contain ethylene glycol.
5. Fire resistance rating must be equal to or exceed the fire resistance rating of the wall, floor or roof in or between which it is installed.
6. Exposed Joint firestopping systems must have a flame-spread and smoke-developed index of less than 25 and 450, respectively, as determined per ASTM E84

C. Installation:

1. Firestopping shall be installed at locations where openings are made and where shown or specified in accordance with manufacturer's written instructions, fire test assembly and as indicated on drawings.
2. Firestopping materials shall completely fill all void spaces regardless of geometric configuration and subject to tolerances established by the manufacturer.
3. Firestopping shall be installed at all piping, electrical conduit and cables,and ductwork penetrating fire rated assemblies and seal holes or voids made by penetrations to ensure an effective fire or fire/smoke barrier. Fire dampers in ducts and penetrations of fire resistance rated construction shall be furnished and installed in accordance with the requirements in Mechanical Sections.
4. Identify joint firestopping systems with legible metal or plastic labels. Attach labels permanently to surfaces adjacent to and within 6 inches of joint edge so labels are visible to anyone seeking to remove joint firestopping system. Include the following on the labels:

a. "Warning - Joint Firestopping - Do NOT Disturb. Notify Building Management of Any Damage."
b. Contractor's name, address and phone number.
c. Designation of applicable testing agency
d. Date of Installation
e. Manufacturer's name
f. Installer's name

D. Warranty: Provide manufacturers' standard product warranty.

079200- Joint Sealants

Basis-of-Design Product: Subject to compliance with requirements, provide products indicated below by Tremco, or a comparable product by one of the following:

1. BASF Building Systems
2. Pecora Corporation
3. Dow Corning Corp.

Products:

A. Silicone (for use around plumbing fixtures and around glazing):
1. Spectrem 2
2. Color: Clear

B. Urethane (for use at masonry, control joints, and rough openings)
1. Dymonic 100
2. Color: To match adjacent material color (color and paintable)

C. Joint Sealant Backing:
1. Closed cell material with a surface skin or as approved by sealant manufacturer

Installation: Install sealants and proper backing according to manufacturers' written instructions.

Warranty: Provide manufacturers' standard product warranty.

079219- Acoustical Joint Sealants

Basis-of-Design Product: Subject to compliance with requirements, provide products indicated below by USG or a comparable product by an approved manufacturer.

Products:

A. Acoustical Joint Sealant
1. USG Sheetrock Brand Acoustical Sealant

Installation: Install sealants according to manufacturers' written instructions.

Warranty: Provide manufacturer's standard warranty.

DIVISION 08 - OPENINGS

081113- Hollow Metal Doors and Frames (Standard)

Manufacturers:

Basis-of-Design Product: Subject to compliance with requirements, provide products indicated below by CECO Door Products, or a comparable product by one of the following:

1. Curries Company
2. Steelcraft
3. Or Approved equal

Products:

Materials
A. Cold-Rolled Steel Sheet: ASTM A 1008/A 1008M, Commercial Steel (CS), Type B; suitable for exposed applications.
B. Metallic-Coated Steel Sheet: ASTM A 653/A 653M, Commercial Steel (CS), Type B; with minimum G60 (Z180) or A60 (ZF180) metallic coating.
C. Frame Anchors: ASTM A 653/A 653M, Commercial Steel (CS), Commercial Steel (CS), Type B; with minimum G60 (Z180) or A60 (ZF180) metallic coating.

081113- Hollow Metal Doors and Frames (Standard) (continued)

Hollow Metal Doors
A. General: Provide 1-3/4 inch doors of design indicated, not less than thickness indicated; fabricated with smooth surfaces, without visible joints or seams on exposed faces unless otherwise indicated. Comply with ANSI / SDI A250.8 and ANSI/NAAMM HMMA 867.
B. Exterior Doors: Face sheets fabricated of commercial quality hot-dipped zinc coated steel that complies with ASTM A 653 /A 653M, Coating Designation A60. Provide doors complying with requirements indicated below by referencing ANSI/SDI A250.8 for level and model and ANSI/SDI A250.4 for physical performance level.

1. Design: Flush panel.
2. Level/Model: Level 2 and Physical Performance Level B (Heavy Duty), Minimum 18 gauge (0.042-inch - 1.0-mm) thick steel, Model 2.
3. Top and Bottom Edges: Reinforce tops and bottoms of doors with a continuous steel channel not less than 16 gauge, extending the full width of the door and welded to the face sheet. Doors ith an inverted top channel to include a steel closure channel, screw attached, with the web of the channel flush with the face sheets of the door. Plastic or composite channel fillers are not acceptable.
4. Hinge Reinforcement: Minimum 7 gauge (3/16") plate 1-1/4" x 9" or minimum 14 gauge continuous channel with pierced holes, drilled and tapped.
5. Hardware Reinforcements: Fabricate according to ANSI/SDI A250.6 with reinforcing plates from same material as door face sheets.

C. Interior Doors: Face sheets fabricated of commercial quality cold rolled steel that complies with ASTM A 1008 / A 1008M. Provide doors complying with requirements indicated below by referencing ANSI/SDI A250.8 for level and model and ANSI/SDI A250.4 for physical performance level:
1. Design: Flush panel.
a. Fire Door Core: As required to provide fire-protection and temperature-rise ratings indicated.
2. Level/Model: Level 2 and Physical Performance Level B (Heavy Duty), Minimum 18 gauge (0.042-inch - 1.0-mm) thick steel, Model 2.
3. Top and Bottom Edges: Reinforce tops and bottoms of doors with a continuous steel channel not less than 16 gauge, extending the full width of the door and welded to the face sheet.
4. Hinge Reinforcement: Minimum 7 gauge (3/16") plate 1-1/4" x 9" or minimum 14 gauge continuous channel with pierced holes, drilled and tapped.
5. Hardware Reinforcements: Fabricate according to ANSI/SDI A250.6 with reinforcing plates from same material as door face sheets.

D. Manufacturers Basis of Design:
1. CECO Door Products (C) Honeycomb Core - Regent Series.

Hollow Metal Frames
A. General: Comply with ANSI/SDI A250.8 and with details indicated for type and profile.
B. Exterior Frames: Fabricated of hot-dipped zinc coated steel that complies with ASTM A 653/A 653M, Coating Designation A60.
1. Fabricate frames with mitered or coped corners. Profile as indicated on drawings.
2. Manufacturers Basis of Design:
a. CECO Door Products (C) – SQSeries.
b. Curries Company (CU) – M Series.
C. Interior Frames: Fabricated from cold-rolled steel sheet that complies with ASTM A 1008 / A 1008M.
1. Fabricate frames with mitered or coped corners. Profile as indicated on drawings.
2. Manufacturers Basis of Design:
a. CECO Door Products (C) - SQ Series.
b. Curries Company (CU) - M Series.
D. Fire rated frames: Fabricate frames in accordance with NFPA 80, listed and labeled by a qualified testing agency, for fire-protection ratings indicated.
E. Hardware Reinforcement: Fabricate according to ANSI/SDI A250.6 Table 4 with reinforcement plates from same material as frames.

Frame Anchors
A. Jamb Anchors:
1. Masonry Type: Adjustable strap-and-stirrup or T-shaped anchors to suit frame size, formed from A60 metallic coated material, not less than 0.042 inch thick, with corrugated or perforated straps not less than 2 inches wide by 10 inches long; or wire anchors not less than 0.177 inch thick.
2. Stud Wall Type: Designed to engage stud and not less than 0.042 inch thick.
3. Compression Type for Drywall Slip-on (Knock-Down) Frames: Adjustable compression anchors.
4. Windstorm Opening Anchors: Types as tested and required for indicated wall types to meet specified wind load design criteria.
B. Floor Anchors: Floor anchors to be provided at each jamb, formed from A60 metallic coated material, not less than 0.042 inches thick.
C. Mortar Guards: Formed from same material as frames, not less than 0.016 inches thick.

Installation: Install hollow metal doors and frames according to manufacturers' written instructions.

Warranty: Provide manufacturers' standard product warranty.

081416- Flush Interior Wood Doors

Door Construction - General
A. WDMA I.S.1-A Performance Grade: Extra Heavy Duty; Aesthetic Grade: Premium.
B. U-Factor: 0.50
Core Construction
A. Particleboard Core Doors:
1. Particleboard: Wood fiber based materials complying with ANSI A208.1 Particleboard standard. Grade LD-2.
2. Adhesive: Fully bonded construction using Polyurethane (PUR) glue.
3. Blocking: As indicated under article "Blocking".
Veneered Doors for Painted Finish
A. Manufacturers: Subject to compliance with requirements, provide products by one of the following:
1. ASSA ABLOY Wood Doors (GR): GPD Series.
2. Eggers Industries (EG): Premium Series.
3. Marshfield-Algoma (MF): Signature Series.
4. VT Industries (VT): Artistry Series.
B. Interior Solid Core Doors:
1. Grade: Custom.
2. Faces: Veneer grades as noted below; veneer minimum 1/50-inch (0.5mm) thickness at moisture content of 12% or less.
a. Rotary Sliced Natural Birch, A grade faces.
3. Match between Veneer Leaves: Book match.
4. Assembly of Veneer Leaves on Door Faces:
a. Running Match.
5. Pair and Set Match: Provide for doors hung in same opening or separated only by mullions.
6. Transom Match: Continuous match.
7. Vertical Edges: Matching same species as faces. Wood or composite material, one piece, laminated, or veneered. Minimum requirements per WDMA section P-1, Performance Standards for Architectural Wood Flush Doors.
8. Horizontal Edges: Solid wood or structural composite material meeting the minimum requirements per WDMA section P-1, Performance Standards for Architectural Wood Flush Doors
9. Construction: Five plies. Stiles and rails are bonded to core, then entire unit sanded before applying face veneers.
10. At doors over 40% of the face cut-out for lights and or louvers, furnish engineered composite lumber core.
Light Frames and Glazing
A. Metal Frames for Light Openings in doors with up to 1-inch thick insulated glazing.
1. Low profile beveled vision lite frame
2. Color: Gray
3. 20 gauge cold rolled steel
4. Mitered and welded corners with counter sunk mounting holes
5. Size as indicated on plans.
B. Glazing: Comply with installation requirements in Division 08 Section "Glazing" and with the flush wood door manufacturer's written instructions.
Fabrication
A. Factory fit doors to suit frame opening sizes indicated.
1. Comply with requirements in NFPA 80 for fire rated doors.
2. Undercut: As required per manufacturer's templates and sill condition.

081416- Flush Interior Wood Doors (continued)

Fabrication
B. Factory machine doors for hardware that is not surface applied. Comply with final hardware schedules, door frame Shop Drawings, DHI A115-W series standards, and hardware templates.
1. Coordinate with hardware mortises in metal frames to verify dimensions and alignment before factory machining.
2. Metal Astragals: Factory machine astragals and formed steel edges for hardware for pairs of fire rated doors.
C. Openings: Cut and trim openings through doors in factory.
1. Light Openings: Trim openings with moldings of material and profile indicated.
2. Glazing: Comply with applicable requirements in Division 08 Section "Glazing."

Installation: Install per manufacturers' standard written instructions.

Warranty: Provide manufacturers' standard material warranty.

083113- Access Doors and Frames

Manufacturers:

Basis-of-Design Product: Subject to compliance with requirements, provide products indicated below by Williams Brothers, or a comparable product by an approved manufacturer.

Products:
A. Attic Ladder: Super Simplex Disappearing Stairway
i. Opening Size: 30 inches x 54 inches
ii. Floor to Mezzanine Height: 9' - 4"
iii. Floor to Ceiling Height: 8' - 5 1/2"
iv: Ladder width: 18 inches min.

B. Insulated Exterior Access Door
i. Model # WB EXT 1350 ULTRA 20x30
ii. Opening Size: 20 inches x 30 inches
iii. Door and Trim: 16 ga galv steel
iv. Finish: Primed white baked enamel, paintable surface.
v. Latches: pattle latch lock and slam catch and interior latch release.
vi. Hinges: continuous piano hinge.
vii. ASTM compliance: D4060, E330, G155 & G154

Installation: Install attic access according to manufacturer's written instructions.

Warranty: Provide manufacturers' standard product warranty.

083613- Sectional Doors (Standard and Non-Impact Hurricane Zone):

Manufacturers:

Basis-of-Design Product: Subject to compliance with requirements, provide products indicated below by Overhead Door Corporation, or a comparable product by an approved manufacturer.

Products:

Notes:
1.) All glazing to have proper labels as required by local AHJ and building codes.
2.) All glazing shall be reviewed and approved by the local distributor to meet the requirements for the region in which the glazing is being installed. Any issues with items specified shall be brought to the attention of the Architect prior to bid.
3.) Door supplier is responsible for providing a door to meet the wind load requirements for the site location.

1.1 MANUFACTURERS
A. Acceptable Manufacturer: Overhead Door Corporation/Wayne Dalton, Commercial Solutions National Accounts, 2501 S. State Hwy. 121, Suite 200, Lewisville, TX 75067. ASD. Tel. Toll Free: (800) 275-3290. Phone: (469) 549-7100. Fax: (972) 906-1499. Web Site: www.overheaddoor.com. E-mail: info@overheaddoor.com.

B. Requests for substitutions will be considered in accordance with provisions of Section 01 60 00 - Product Requirements.

1.2 STEEL SECTIONAL OVERHEAD DOORS

A. Sectional Overhead Steel Doors: Model 430 Steel Doors by Overhead Door Corporation:

1. Doors:
a. Operation:
1) Provide doors designed for manual operation using a chain hoist.
b. Structural Performance Requirements:
1) Wind Loads: See Structural.

2. Door Model 430 Requirements:
a. Door Assembly: Steel door assembly with rabbeted meeting rails to provide full-width interlocking structural rigidity.
1) Panel Thickness: 2 inches (51 mm).
2) Exterior Surface: Ribbed
3) Section Material: Nominal 24 gauge steel.
4) Center and End Stiles: 16 gauge steel
5) Springs: 50,000 cycles.
6) Provide leaf spring bumpers.
7) Glazing Panels: Match Exterior Elevations
8) Glazing Type: Non-Impact Rated Glazing: ¼ inch clear tempered glass consisting of one pane of ¼ inch non-insulated glass
9) Finish: Two coat baked on polyester
10) Color: See Finish Schedule.
11) Hardware: Galvanized steel hinges and fixtures. Ball bearing rollers with hardened steel races.
12) Lock: Interior mounted slide lock with dead bolt provided with hole to receive padlock provided by Owner.
13) Weatherstripping: Provide complete weather stripping system to reduce air infiltration. Weatherstripping shall be replaceable.
14) Track: Provide track as recommended by manufacturer to suit loading required and clearances available.
15) Configuration Type: Vertical Lift Clearance: Track must provide 35" available headroom, which will maintain 14'-0" minimum clearance from finish floor to underside of lift equipment.
16) Follow manufacturer's instructions for installation. Support tracks are to be adequately reinforced with continuous angle attached to structure.
17) Provide and Install Clopay ControlGard® Chain Hoist or electric operators at each door.
18) Doors must be installed by a qualified and manufacturer-certified installer.
19) Prior to door installation, GC shall submit door installer's current manufacturer-certification or other proof of training to the Owner contact: Jeff Carter @ jeffcarter@expressoil.com.
20) Doors must be installed per manufacturer's requirements, details and specifications. Proper alignment, spring tension and support are essential to ensure proper door operation and performance.

1.3 EXECUTION

1 EXAMINATION
a. Do not begin installation until substrates have been properly prepared. Verify that site conditions are acceptable for installation of doors, operators, controls and accessories. Ensure that openings are square, flush and plumb.
b. If substrate preparation is the responsibility of another installer, notify Architect of unsatisfactory preparation before proceeding.

2. PREPARATION
a. Clean surfaces thoroughly prior to installation.
b. Prepare surfaces using the methods recommended by the manufacturer for achieving the best result for the substrate under the project conditions.

AHO ARCHITECTS, LLC
www.ahoarch.com

REGISTERED ARCHITECT TIMOTHY A. AHO 25347 STATE OF TEXAS
08/12/2026

Express Oil Change & Tire Engineers
Single Building / Right Hand Oil Change / Rear Enter / Side Tire Storage
Cross Roads, Texas (Aubrey)

FINAL

No.	Description	Date
IFP-0	Issue for permit	06/30/2026
IFB-0	Iss. for Bid / AHJ Rev.	08/12/2026

© 2026 Aho Architects, LLC. All Rights Reserved.

Architectural Specifications

Project number	26013
Date	06/30/2026
Drawn by	ARC
Checked by	N/A

G201

Scale 12" = 1'-0"

9/1/2026 1:41:13 PM

083613- Sectional Doors (Standard and Non-Impact Hurricane Zone)(continued):

1.3 EXECUTION

3. INSTALLATION
   a. General: Install door, track and operating equipment complete with all necessary accessories and hardware according to shop drawings, manufacturer's instructions.
   b. Lubricate bearings and sliding parts, and adjust doors for proper operation, balance, clearance and similar requirements.
   c. Coordinate installation with adjacent work to ensure proper clearance and allow for maintenance.
   d. Anchor assembly to wall construction and building framing without distortion or stress.
   e. Secure brace door tracks suspended from structure. Secure tracks to structural members only.

4 PROTECTION
   a. Clean installed products in accordance with manufacturer's instructions prior to Owner's acceptance. Remove and legally dispose of construction debris from project site.
   b. Remove temporary coverings and protection of adjacent work areas. Repair or replace installed products damaged prior to or during installation.
   c. Lubricate bearings and sliding parts, assure weather tight fit around door perimeter and adjust doors for proper operation, balance, clearance and similar requirements. Protect installed products until completion of project.
   d. Touch-up, repair or replace damaged products before Substantial Completion.

Installation: Install sectional doors according to manufacturers' written instructions.

Warranty: Overhead Door Corporation warrants the door sections against defects in material and workmanship, and deterioration due to rust-through for ten years from date of delivery to the original purchaser. Window components are warranted against defects in material and workmanship for one year from date of delivery to the original purchaser.
Overhead Door warrants all hardware and spring components against defects in material and workmanship for one year (or cycle life of the springs) from date of delivery to the original purchaser. Additional Limited Warranty requirements in accordance with manufacturer's full standard limited warranty documentation.

084113- Aluminum-Framed Entrances and Storefronts (Standard & Hurricane Non-Impact)

Manufacturers:

Basis-of-Design Product: Subject to compliance with requirements, provide products indicated below by YKK AP America Inc., or a comparable product by one of the following:

1. Kawneer
2. Or Approved equal

Products:

A. Exterior Storefront System
   1. YES 45 TU
   2. Center set.
   3. Thermal Barrier: Provide continuous thermal barrier by means of a poured and debridged pocket consisting of a two part, chemically curing high density polyurethane which is bonded to the aluminum by YKK ThermaBond Plus.
   4. Materials: Anodized Aluminum; 0.050" minimum thickness.
   5. Accessories: As recommended by the manufacturer.
   6. Components: Manufacturer's standard extruded aluminum mullions, entrance doors, framing, and indicated shapes, perimeter anchor fillers and steel reinforcing as required.
   7. Glazing Stops: Manufacturer's standard glazing stops with EPDM glazing gaskets to prevent water infiltration at the exterior and Dow Corning 995 Structural Silicone Sealant with fixed stops at the interior. Color to match storefront.
   8. Finish: See finish schedule.
   9. Wind Load: See Structural for design pressures.
   10. Door: 35D - Medium Stile
      a. Material: 0.050" aluminum min. thickness
      b. Finish: See finish schedule.
      c. Hardware: See Division 8 Door Hardware
      d. Accessories: Manufacturer's standard
      e. Glass: See Division 8 Glazing
      f. Glazing Stops: Manufacturer's standard
      g. Weather-stripping: Manufacturer's standard

B. Interior Storefront System
   1. YES 45 FS
   2. Center set.
   3. Materials: Anodized Aluminum; 0.050" minimum thickness.
   4. Accessories: As recommended by the manufacturer.
   5. Finish: See finish schedule.

C. Storefront Glazing
   1. Glazing: Comply with Division 08 "Glazing"
   2. Glazing Gaskets: Manufacturer's standard sealed-corner pressure-glazing system of resilient elastomeric glazing gaskets, setting blocks, and shims or spacers.
   3. Glazing Sealants: As recommended by the manufacturer.

Installation:
Install aluminum-framed entrances and storefronts according to manufacturers' written instructions.

Warranty:
Provide manufacturers' standard product warranty.

087100- Door Hardware

Basis-of-Design Product: Subject to compliance with requirements, provide products indicated below by the following manufacturers, or approved equal:

1. MK- McKinney
2. AD- Adams Rite
3. YA- Yale
4. RO-Rockwood
5. NO-Norton
6. PE- Pemko

General Notes:
1. Hardware listed for design criteria, confirm with specific door manufacturer.
2. Finishes for all door hardware are to be as indicated on Finish Schedule.

Hardware Sets:

Set: 1.0
Doors: 1
Description: EXT - ALUM

1	Continuous Hinge	MCK-25HD	MK
1	Deadlatch	4900 x 4591	AD
1	Cylinder	Mort / Cyl as required	YA
2	Pull	BF168	RO
1	Surface Closer	CLP8501	NO
1	Mtg Plate	as required	NO
1	Threshold	271A Pemkote MSES25SS	PE
1	Gasketing	by door / frame mfg	
1	Sweep	315CN	PE

Set: 2.0
Doors: 2, 5, 22, 23
Description: BAYS

4	Hinge	TA2714 4-1/2" x 4-1/2"	MK
1	Cylindrical Lock (classroom)	PB 5408LN	YA
1	Surface Closer	8501 Reg / PA	NO
1	Kick Plate	K1050 8" X 2" LDW 4BE CSK	RO
1	Door Stop	409 / 446 [as required]	RO
1	Gasketing	S773D	PE

087100- Door Hardware (continued)

Set: 3.0
Doors: 3
Description: WAITING - ALUM

1	Continuous Hinge	MCK-25HD	MK	IFB-0
2	Door Pull	BF168	RO	
1	Surface Closer	8501 Reg / PA	NO	
1	Door Stop	409 / 446 [as required]	RO	
1	Gasketing	by door / frame mfg		

Set: 3.1
Doors: 9, 21, 24, 25, 30
Description: EXT - BAYS

4	Hinge (heavy weight)	T4A3386 NRP 4-1/2" x 4-1/2"	MK
1	Exit Device (rim, nightlatch)	7150 WS PB627F	YA
1	Cylinder	Mort / Cyl as required	YA
1	Surface Closer	CLP8501	NO
1	Threshold	271A Pemkote MSES25SS	PE
1	Gasketing	S773D	PE
1	Rain Guard	346C x LAR	PE
1	Sweep	315CN	PE

Set: 4.0
Doors: 4
Description: TOILET

4	Hinge	TA2714 4-1/2" x 4-1/2"	MK
1	Cylindrical Lock (privacy)	PB 5402LN	YA
1	Mop Plate	K1050 4" X 1" LDW 4BE CSK	RO
1	Door Stop	409 / 446 [as required]	RO
1	Gasketing	S773D	PE
1	Surface Closer	8501 Reg / PA	NO

Set: 5.0
Doors:15
Description: OFFICE

4	Hinge	TA2714 4-1/2" x 4-1/2"	MK
1	Cylindrical Lock (entry)	PB 5407LN	YA
1	Door Stop	409 / 446 [as required]	RO
1	Threshold	271A Pemkote MSES25SS	PE
1	Gasketing	S773D	PE
1	Sweep	315CN	PE
1	Surface Closer	8501 Reg / PA	NO

Set: 6.0
Doors: 13,14
Description: BREAK

4	Hinge	TA2714 4-1/2" x 4-1/2"	MK
1	Passage Set	PB 5401LN	YA
1	Surface Closer	8501 Reg / PA	NO
1	Mop Plate	K1050 4" X 1" LDW 4BE CSK	RO
1	Kick Plate	K1050 8" X 2" LDW 4BE CSK	RO
1	Door Stop	409 / 446 [as required]	RO
1	Gasketing	S773D	PE

Set: 7.0
Doors: 16
Description: SHOP TOILET

4	Hinge	TA2714 4-1/2" x 4-1/2"	MK
1	Cylindrical Lock (privacy)	PB 5402LN	YA
1	Mop Plate	K1050 4" X 1" LDW 4BE CSK	RO
1	Door Stop	409 / 446 [as required]	RO
1	Threshold	271A Pemkote MSES25SS	PE
1	Gasketing	S773D	PE
1	Sweep	315CN	PE
1	Surface Closer	8501 Reg / PA	NO

Set: 8.0
Doors: 6, 7, 8, 10, 11, 12, 18, 19, 20, 26, 27,28
Description: OH DOOR

1	Hardware	By door mfg

Installation: Install door hardware according to manufacturers' written instructions. All door hardware (Interior and Exterior) to be keyed alike.

Warranty: Provide manufacturers' standard product warranty.

088000- Glazing (IGU) Standard and Hurricane Non-Impact

Manufacturers:

Basis-of-Design Product: Subject to compliance with requirements, provide products indicated below by Vitro, or a comparable product by one of the following:

1. Guardian Industries Corp.
2. Or Approved equal

Products:

Notes:
1.) All glazing to have proper labels as required by local AHJ and building codes.
2.) All glazing shall be reviewed and approved by the local distributor to meet the requirements for the region in which the glazing is being installed. Any issues with items specified shall be brought to the attention of the Architect prior to bid.

A. GL-1 Insulated Glass Unit
   Double Glazed Clear Solar Control Insulating Glass Unit Solarban® 90 on Clear 6mm (2) | Air 1/2" (12.7mm) | Clear 6mm
   1. Conformance: ASTM E 2190
   2. Outdoor Lite: Clear Float Glass as manufactured by Vitro Architectural Glass
      a. Conformance: ASTM C 1036, Type 1, Class 1, Quality q3.
      b. Glass Thickness: 6mm (1/4")
      c. Magnetic Sputter Vacuum Deposition Coating (MSVD): ASTM C 1376.
      d. Coating: Solarban® 90 on Surface # 2
      e. Heat-Treatment: Tempered; ASTM C 1048, Kind FT; Safety Glazing meets ANSI Z97.1 and CPSC 16CFR-1201
   3. Interspace Content: Air 1/2" (12.7mm)
   4. Indoor Lite: Clear float glass as manufactured by Vitro Architectural Glass
      a. Conformance: ASTM C 1036, Type 1, Class 1, Quality q3.
      b. Heat-Treatment: Tempered; ASTM C 1048, Kind FT; Safety Glazing meets ANSI Z97.1 and CPSC 16CFR-1201
      c. Glass Thickness: 6mm (1/4")
   5. Performance Requirements:
      a. Visible Light Transmittance: 51 percent minimum.
      b. Winter Nighttime U-Factor: 0.29 (Btu/hr*ft^2*°F) maximum.
      c. Summer daytime U-Factor: 0.27 (Btu/hr*ft^2*°F) maximum.
      d. Shading Coefficient: 0.27 maximum.
      e. Solar Heat Gain Coefficient: 0.23 maximum.
      f. Outdoor Visible Light Reflectance: 12 percent maximum.

B. GL-2 Monolithic Single-Glaze Float-Glass:
   Monolithic Clear Glass Clear 6mm
   2. Performance Requirements:
      a. Visible Light Transmittance: 89 percent minimum.
      b. Winter Nighttime U-Factor: 1.02 (Btu/hr*ft^2*°F) maximum.
      c. Summer daytime U-Factor: 0.92 (Btu/hr*ft^2*°F) maximum.
      d. Shading Coefficient: 0.94 maximum.
      e. Solar Heat Gain Coefficient: 0.82 maximum.
      f. Outdoor Visible Light Reflectance: 8 percent maximum.

088000- Glazing (IGU) Standard and Hurricane Non-Impact (continued):

C. GL-3 Spandrel Insulating Glass Unit (Non-Hurricane Type)
   Double Glazed Clear Solar Control Spandrel Insulating Glass Unit [Solarban® 90 on Clear 6mm (2) | Air 1/2" (12.7mm) | 100% Black Gray Opaci-Coat (4) on 6mm Clear]
   1. Conformance: ASTM E 2190, [ASTM C 1048, Condition B, Type I, Quality-Q3 and GANA 'Engineering Standards Manual' GANA 66-9-20 Specification for Heat-Strengthened or Fully Tempered Ceramic Enameled Spandrel Glass for Use in Building Window/Curtain Walls and Other Architectural Applications] or [Float glass complying with ASTM C 1048, GANA 'Engineering Standards Manual' GANA 89-1-6 Specification for Environmental Durability of Fully Tempered or Heat-Stren g thened Spandrel Glass with Applied Opacifier and other requirements specified, with manufacturer's standard opacifier material on coated second surface of lites]
   2. Outdoor Lite: Clear Float Glass as manufactured by Vitro Architectural Glass
      a. Conformance: ASTM C 1036, Type 1, Class 1, Quality q3.
      b. Glass Thickness: 6mm (1/4")
      c. Magnetic Sputter Vacuum Deposition Coating (MSVD): ASTM C 1376.
      d. Coating: Solarban® 90 on Surface # 2
      e. Heat-Treatment: Tempered; ASTM C 1048, Kind FT; Safety Glazing meets ANSI Z97.1 and CPSC 16CFR-1201
   3. Interspace Content: Air 1/2" (12.7mm)
   4. Indoor Lite: Clear Float Glass as manufactured by Vitro Architectural Glass
      a. Conformance: ASTM C 1036, Type 1, Class 1, Quality q3.
      b. Glass Thickness: 6mm (1/4")
      c. Heat-Treatment: Tempered; ASTM C 1048, Kind FT; Safety Glazing meets ANSI Z97.1 and CPSC 16CFR-1201
      d. Coating Type, Color, Number, % Coverage: Opaci-Coat 300, #3-967 Black-Gray 100% coverage
      e. Spandrel Coating Surface: 4
   5. Performance Requirements:
      a. Visible Light Transmittance: 3 percent minimum.
      b. Winter Nighttime U-Factor: 0.29 (Btu/hr*ft^2*°F) maximum.
      c. Summer daytime U-Factor: 0.27 (Btu/hr*ft^2*°F) maximum.
      d. Shading Coefficient: 0.21 maximum.
      e. Solar Heat Gain Coefficient: 0.18 maximum.
      f. Outdoor Visible Light Reflectance: 16 percent maximum.

D. Glazing Installation
   1. Install per manufacturers' standard written instructions.

E. Glazing warranty
   1. Provide manufacturers' standard product warranty.

DIVISION 9 - FINISHES
092900- Gypsum Board

Manufacturers:

Basis-of-Design Product: Subject to compliance with requirements, provide products indicated below by Lafarge unless otherwise indicated, or a comparable product by one of the following:

1. Georgia-Pacific
2. USG
3. National Gypsum

Products:
A. Moisture and Mold-Resistant Type: Mold Defense
   1. Thickness: 1/2 inch
   2. Long Edges: Tapered
   3. Finish: Level 4 in areas exposed to view. Level 1 in concealed areas.
B. Water-resistant Type: Watercheck (@ Toilet Rooms and behind plumbing fixtures)
   1. Thickness: 1/2 inch
   2. Long Edges: Tapered
   3. Finish: Level 4
   4. Cuts: All cuts in board shall be covered with special waterproofing sealant as recommended by the manufacturer.
C. Type X: Firecheck (As Required)
   1. Thickness: 5/8"
   2. Long Edges: Tapered
   3. Finish: Level 4
   4. All penetrations and joints to be sealed with fire caulk as recommended by the manufacturer.

Installation: Install gypsum board and accessories according to manufacturers' written instructions.

Warranty: Provide manufacturers' standard product warranty.

095000- Acoustical Tile Ceiling

Manufacturer:

Basis-of-Design Product: Subject to compliance with requirements, provide products indicated below by Armstrong World Industries, Inc.

Products:
A. Acoustical Ceiling Panels
   1. Style: 1775 Dune
   2. Surface Texture: Fine Texture
   3. Composition: Mineral Fiber
   4. Color: White
   5. Size: 24 inch x 24 inch
   6. Edge Profile: Square Lay-in

B. Metal Suspension Systems
   1. Suprafine XL 9/16" Exposed Tee Grid and Edge Molding
   2. Wire for Hangers and Ties: ASTM A 641, Class 1 zinc coating, soft annealed, with a yield stress load of at least time three design load, but not less than 12 gauge.

Installation: Install suspension system and panels in accordance with manufacturers' written instructions, and in compliance with ASTM C 636.

Warranty: Provide manufacturers' standard product warranty.

096513- Resilient Base and Accessories

Manufacturers:

Basis-of-Design Product: Subject to compliance with requirements, provide products indicated below by Roppe, or a comparable product by one of the following:

1. Johnsonite, a Tarkett Company
2. Armstrong World Industries
3. Or Approved equal

Products:
A. Rubber Base: Pinnacle Rubber by Roppe
   1. Height: 4"
   2. Length: Coils in manufacturer's standard length
   3. Outside Corners: Job formed
   4. Inside Corners: Job formed
   5. Color as indicated on finish schedule.

B. Reducer Strip: Roppe Reducer Strip #22
   1. Color as indicated on finish schedule.

C. Adhesives: As recommended by the manufacturer

096513- Resilient Base and Accessories (continued)

Installation: Install resilient base and reducer according to manufacturers' written instructions.

Warranty: Provide manufacturers' standard product warranty.

096519- Resilient Tile Flooring

Manufacturers:
Subject to compliance with requirements, provide product indicated below by Tarkett.

Products:
A. LVT
   1. Style / Color: Contour Mineral Basalt PCMB / Paved Path 4645
   2. Size: 12" x 36" planks
   3. Overall thickness: .120" (3 mm)
   4. Wear layer Thickness: 32 mil (0.8 mm)

B. Adhesives: As recommended by the manufacturer

Installation: Install resilient floor tile according to manufacturers' written instructions.

Warranty: Provide manufacturers' standard product warranty.

099113- Exterior Painting

Manufacturer:

Basis-of-Design Product: Subject to compliance with requirements, provide products indicated below by Sherwin Williams.

Products:

A. Masonry:
   1.) Primer: SW Pro Industrial Heavy Duty Block Filler B42W150
   2.) Finish Coats: SW Latitude Exterior Acrylic in Satin Finish K62-Series
B. Steel:
   1.) Primer: SW Pro Industrial Pro-Cryl Universal Primer B66-1300 Series
   2.) Finish Coats: SW Pro Industrial Urethane Alkyd Enamel B54-Series
C. Wood:
   1.) Primer: SW Exterior Latex Wood Primer B42W8141
   2.) Finish Coats: SW Latitude Exterior Acrylic in Satin Finish K62-Series
D. Aluminum: Pro Industrial Urethane Alkyd Enamel Gloss, B54-150 Series
   1.) Primer: SW Pro Industrial Pro-Cryl Universal Primer B66-1300 Series
   2.) Finish Coats: SW Pro Industrial Sher-Cryl High Performance Acrylic Semi-Gloss B66-1350 Series

Note: Use 1 coat primer as recommended by manufacturer and 2 finish coats unless otherwise recommended by the manufacturer.

Installation: Install exterior paint according to manufacturers' written instructions.

Warranty: Provide manufacturers' standard product warranty.

099123- Interior Painting

Manufacturer:

Basis-of-Design Product: Subject to compliance with requirements, provide products indicated below by Sherwin Williams.

Products:

A. Masonry:
   1.) Primer: SW Pro Industrial Heavy Duty Block Filler B42W150
   2.) Finish Coats: SW Pro Industrial Pre-Catalyzed Epoxy Semi-Gloss K46-Series
B. Steel:
   1.) Primer: SW Pro Industrial Pro-Cryl Universal Primer B66-1300 Series
   2.) Finish Coats: Pro Industrial Urethane Alkyd Enamel Gloss, B54-150 Series
C. Interior Wood:
   1.) Primer: SW PrepRite ProBlock Interior/ Exterior Latex Primer- Sealer B51-600 Series
   2.) Finish Coats: SW Pro Industrial Acrylic Semi-Gloss B66-650 Series
D. Gypsum Board in Office Area:
   1.) Primer: ProMar 200 Zero VOC Interior Latex Primer B28W12600
   2.) Finish Coats: ProMar 200 Zero VOC Interior Latex Egshel, B20W2600 Series. Use extreme bond primer at vinyl graphics.
E. Gypsum Board in Bay Area:
   1.) Primer: ProMAR 200 Zero VOC Interior Latex Primer B28W12600
   2.) Finish Coats: SW Pro Industrial Catalyzed Epoxy B73-Series. Use extreme bond primer at vinyl graphics.
F. Gypsum Board Ceilings:
   1.) Primer: ProMar 200 Zero VOC Interior Latex Primer B28W12600
   2.) Finish Coats: ProMar 200 Zero VOC Interior Latex Flat, B30W2650 Series
G. Sealed Concrete Floors:
   ArmorSeal Rexthane I Floor Coating + SharkGrip Slip-Resistant Additive (1000 HS primer)

Note: Use 1 coat primer as recommended by manufacturer and 2 finish coats unless otherwise recommended by the manufacturer.

Installation: Install interior paint according to manufacturers' written instructions.

Warranty: Provide manufacturers' standard product warranty.

DIVISION 10 - SPECIALTIES

101419- Dimensional Letter Signage - By others.

101423.13 Room-Identification Signage

See drawing on A602.

102600 - Wall and Door Protection

Manufacturer:

Basis-of-Design Product: Subject to compliance with requirements, provide products indicated below by InPro Corporation:

Products:

A. Stainless Steel Flush Mount Corner Guards
B. Corner Radius:1/8"
C. Height: 4'-0"
D. Width: 1 1/2"
E. Materials: Stainless Steel: Type 430, 16 gauge
F. Attachment: Pre-drilled beveled holes and Phillips head screws.
G. Finish: Stainless Steel No. 4 satin finish.
H. Location: As indicated on drawings.

AHO ARCHITECTS, LLC
www.ahoarch.com

REGISTERED ARCHITECT TIMOTHY A. AHO 25347 STATE OF TEXAS
08/12/2026

Express Oil Change & Tire Engineers
Single Building / Right Hand Oil Change / Rear Enter / Side Tire Storage
Cross Roads, Texas (Aubrey)

FINAL

No.	Description	Date
IFP-0	Issue for permit	06/30/2026
IFB-0	Iss. for Bid / AHJ Rev.	08/12/2026

© 2026 Aho Architects, LLC. All Rights Reserved.

Architectural Specifications

Project number	26013
Date	06/30/2026
Drawn by	ARC
Checked by	N/A

G202

Scale 12" = 1'-0"

9/1/2026 1:41:15 PM

102600 - Wall and Door Protection (continued)

Products:

J. Installation: Install per manufacturer's standard written instructions.
K. Warranty: Provide manufacturers' standard product warranty.

102800- Toilet, Bath, and Laundry Accessories

The following list of accessories is essentially complete; however, the Contractor shall examine the drawings carefully and shall supply such items not specifically called for to provide a complete installation.

Manufacturers:
Basis-of-Design Product: Subject to compliance with requirements, provide products indicated below by Bradley Corporation or a comparable product by one of the following:

1. Bobrick Washroom Equipment, Inc.
2. American Specialties, Inc.
3. Or Approved Equal

Products:
A. Robe Hook: Bradley Model 915.
B. Grab Bars: Bradley Model 812-001-42, Model 812-001-36, and Model 812-001-24
C. Toilet Tissue Dispenser: Bradley Model 5425 (By Others)
D. Mirror: Bradley Model 780-2436
E. Soap Dispenser: Bradley Model 6563 (By Others)
F. Paper Towel Dispenser: Bradley Model 2494 (By Others)
G. Under Lavatory Guard: Truebro Lav Guard 2 by IPS Corporation
H. Baby Changing Station: Bradley Model 9631 (Light Gray)

Installation:
1. Install accessories according to manufacturers' written instructions, using fasteners appropriate to substrate indicated and recommended by unit manufacturer. Install units level, plumb, and firmly anchored in locations and heights indicated.

2. Install grab bars to withstand a downward load of at least 250 lbf, when tested according to ASTM F 446.

Warranty:
Provide manufacturers' standard product warranty.

104413- Fire Department Lock Box

Manufacturers:

Subject to compliance with requirements, provide products indicated below by the Knox Company:

Products:

A. Lock Box: 3200 Series Hinged Door Surface Mount
  i. Color: As indicated on Finish Schedule

Installation:
1. Install fire department lock box in location and height as required by the authorities having jurisdiction.
2. Install per manufacturer's written installation instructions.

Warranty:
Provide manufacturers' standard product warranty.

104416- Fire Extinguishers

Manufacturers:

Basis-of-Design Product: Subject to compliance with requirements, provide products indicated below by Amerex Corporation, or a comparable product by one of the following:

1. Larsens Manufacturing Company
2. JL Industries
3. Or Approved Equal

Products:
A. ABC Dry Chemical Extinguisher: Amerex Model B456 (office only)
  1. Wall Bracket: Amerex Model 00546-P Wall
  2. UL and ULC Rating: 4A-80BC
B. High Flow for Service Areas: Amerex 760 High Flow
  1. Bracket: 00577-P
  2. UL : 4A-60BC

Installation:
1. Install fire extinguishers in locations and heights indicated and in compliance with requirements of authorities having jurisdiction.

2. Install fire extinguishers and brackets according to manufacturers' written instructions.

Warranty:
Provide manufacturers' standard product warranty.

DIVISION 12- FURNISHINGS

123623.13 Plastic-Laminate-Clad Countertops

Basis-of-Design Product: Subject to compliance with requirements, provide products indicated below by Wilsonart.

Products:
A. Plastic Laminate #1
  i. High pressure decorative laminate: NEMA LD3
  ii. Grade: HGS
  iii. Color: 4880-38 Carbon Mesh

B. Adhesives: as recommended by the manufacturer

Installation:
Install plastic laminate according to manufacturers' written instructions.

Warranty:
Provide manufacturers' standard product warranty.

DIVISION 31- EARTHWORK

313116- Termite Control

Provide EPA Registered termiticide acceptable to authorities having jurisdiction, in an aqueous solution formulated to prevent termite infestation.

DIVISION 33 - UTILITIES

334600- Subdrainage

Basis-of-Design Product: Subject to compliance with requirements, provide products indicated below by Carlisle.

Products:

A. CCW MiraDrain 6200 and 9800
B. CCW MiraStop BW
C. CCW MiraClay Woven and Non-woven Geotextile
D. CCW MiraClay Granules or Mastic

Installation:
Install subdrainage products according to manufacturers' written instructions.

REQUIRED SUBMITTALS

REQUIRED SUBMITTALS	SPECIFICATION SECTION	SUBMIT TO
Cast-In-Place Concrete / Rebar	See Structural Drawings	Structural Engineer / Architect / Owner
Unit Masonry	042200 Masonry	Structural Engineer / Architect / Owner
Structural Steel Framing	See Structural Drawings	Structural Engineer / Architect / Owner
Steel Joist Framing	See Structural Drawings	Structural Engineer / Architect / Owner
Steel Decking	See Structural Drawings	Structural Engineer / Architect / Owner
Ladders	055133 Ladders	Owner
Metal Copings & Canopies	077100 Roof Specialties & Drawings	Owner
EIFS Cornice	072400 EIFS	Owner
TPO Roofing	075423 TPO Roofing	Owner
Standing Seam Metal Roofing	074113.16 SSMR	Owner
Roof Specialities	077100 Roof Specialties	Owner
Aluminum Framed Entrances & Storefronts	084113 Storefront	Owner
Aluminum Windows	084113 Storefront	Owner
Hollow Metal Doors & Frames	081113 HM Doors & Frames	Owner
Interior Wood Doors	081416 Interior Wood Doors	Owner
Overhead Doors	083613 Sectional Doors	Owner
Door Hardware	087100 Door Hardware	Owner
Glazing	088000 Glazing	Owner
Exterior Paint	099113 Exterior Paint	Owner
Interior Paint	099123 Interior Paint	Owner
Fire Extinguishers	104416 Fire Extinguishers	Owner
Termite Control	313116 Termite Control	Owner
Foundation Waterproofing	334600 Subdrainage	Owner
Smoke Vent	See Mechanical Drawings	Owner
Exhaust Fans in Shop	See Mechanical Drawings	Owner
Radiant Heaters / Gas Fired Unit Heaters	See Mechanical Drawings	Owner
Heat Pump / Gas Fired Furnace	See Mechanical Drawings	Owner
Sump Pump	See Keynote #35	Owner
Water Heater / Recirculating Pump	See Plumbing Drawings	Owner
Oil Water Separator	See Plumbing Drawings	Owner
Plumbing Fixtures	See Plumbing Drawings	Owner
Fire Suppression (If Required)	See Fire Suppression Drawings	Owner
Electrical Panels	See Electrical Drawings	Owner
Electrical Fixtures	See Electrical Drawings	Owner
Signage	See Signage Package	Owner
Underground Piping Materials	See Civil Drawings	Civil Engineer / Owner
Underground Water Retention System	See Civil Drawings	Civil Engineer / Owner
Sewer Pump / Grinder Pump	See Civil Drawings	Civil Engineer / Owner

EXPRESS OIL CHANGE & TIRE ENGINEER STANDARDS - EXTERIOR

PAINTED GRAY BRICK

Painted buildings include all of the same specs as the RED BRICK buildings except the red brick is painted Summit Gray. Downspouts are painted to match the background of the building.

If the building does not have a Peak, the blue stripe will go all the way around the building.

Must have a Gray, Black, or Blue Roof

4

EXTERIOR

AWNING

The new metal awning adds a nice modern, industrial look to the buildings and features built-in lighting for customers entering and exiting in late afternoons. Standard size is 12' for most buildings.

9

Awnings by General Contractor. See Details

BRANDED SCONCES

47"x28" aluminum sconces light up your building from top to bottom with a glowing logo in center. E sconces are to be placed on oil change side. TE sconces are to be placed on mechanical side. Sconces to to be evenly spaced between the bay doors, and vertically centered with the bay doors.

10

Branded Sconces by Others

CHANNEL LETTERS

White channel letters with 3" depth. Channel letter sizing is dictated by space and also may change due to the local sign regulations. In most cases, these letters are treated as directional signage. In most cases, sizes vary from 18" to 24".

FONT

Interstate Bold Condensed - 50pt tracking

LETTERING FOR FRONT BUILDING

10 MINUTE OIL CHANGE
FULL SERVICE AUTO CARE
TIRE CENTER

LETTERING FOR BACK BUILDINGS

TIRES ALIGNMENT ROTATE & BALANCE
DIAGNOSTICS A/C BRAKES

8

Letters by Others

Note: Items shown on this page are EOC standards. See Finish Schedule for actual materials to be used on this project.

AHO ARCHITECTS, LLC
www.ahoarch.com

REGISTERED ARCHITECT
TIMOTHY A. AHO
25347
STATE OF TEXAS
08/12/2026

Express Oil Change & Tire Engineers
Single Building / Right Hand Oil Change / Rear Enter / Side Tire Storage
Cross Roads, Texas (Aubrey)

FINAL

No.	Description	Date
IFP-0	Issue for permit	06/30/2026
IFB-0	Iss. for Bid / AHJ Rev.	08/12/2026

© 2026 Aho Architects, LLC. All Rights Reserved.

Architectural Specifications & EOC Standards - Exterior

Project number	26013
Date	06/30/2026
Drawn by	ARC
Checked by	N/A

G300

Scale 12" = 1'-0"

9/1/2026 1:41:17 PM

EXPRESS OIL CHANGE & TIRE ENGINEERS STANDARDS - INTERIOR

INTERIOR

INTERIOR PAINT

Adding two-toned blue walls to the interior creates a bold look that is consistent with EOC&TE branding. The vinyl graphics add an extra communication element.

13

IN-BAY MEDIA (OPTIONAL)

In-Bay Media relays all EOC&TE services to the customer with powerful animated, custom messages. The video is currently over 7 minutes long, allowing some messages to be viewed more than once.

14

In Bay Media by Others

LOBBY

PAINT SCHEME

Paint 3 color stripe on all walls, except the "Word Wall" if permitted. The "Word Wall" will be painted Summit Gray and the vinyl words will be applied to it. For the "Word Wall", choose a blank wall or a wall that has the most blank coverage for the vinyl.

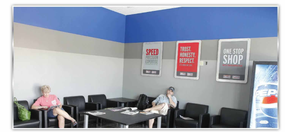

15

BRANDED POSTERS

The new posters deliver powerful messages, and include a new design of the EOC&TE mission statement. Each poster is 36" x 48". Order on www.expressoilprint.com

POSTER FRAMES, MAGAZINE AND ACE CARD HOLDERS

These frames and holders are made of aluminum to match the branding of EOC&TE.

16

Branded Posters by Others.

LOBBY

CHAIRS

There are two options for chairs. Global Lounge large chairs for larger spaces and Europa Guest Chairs for smaller spaces. These chairs are heavy duty and come with a warranty. The are both black leather with metal accent.

Global Lounge Chair - Large

Europa Guest Chair - Small

TILE

All tile must be replaced unless it is in good shape and is a gray color.
Replacement is Dal-Tile Heathland HL05 Ashland with 6" wall base and Dark Grout.

17

Furniture by Others

PAINT SCHEME

BAY AREA

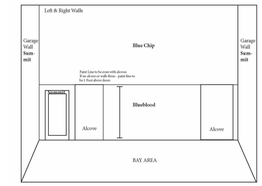

25

LOBBY

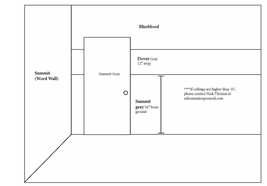

26

See Finish Schedule for Paint Selections

TABLES & LAPTOP STATION

These tables have a heavy duty laminate top with chrome accent legs to match the chairs. They are fully customizable, in shape and size, to fit your space. Typically we use these tables for laptop workstations and for coffee tables. If you do not have space for both, choose which one you would like to have (coffee or laptop station). We also place powerstrips on top of tables that screw on the back. These can be purchased at Home Depot or online (search Wiremold Desktop Power Center or WSR320-S).

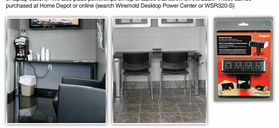

CHAIRS FOR LAPTOP WORKSTATION

Small, armless chairs with leather cushion seat.

Sonic Armless Chair

18

Furniture by Others

VINYL SCHEDULE

The vinyl is fully customizable as far as size and layout. Each location is different. It is best to send the vendor clear measurements of the lobby wall and of the bay walls so they can size appropriately. Please be aware of piping or shelving, or anything else that may be in the way. PLEASE ALLOW 1 WEEK FOR PAINT TO CURE BEFORE APPLYING VINYL.

Bay Area - Avery 700 Medium Gray and Rubber Duckie
Lobby Word Wall - Oracal 631 Gray 071

23

Wall Graphics by Others

Coffee Cabinet Detail

CONSTRUCTION AND MATERIAL NOTES:

Construction

1.) Cabinets:	3/4" plywood with plastic laminate at exposed surfaces, black melamine at semi-exposed surfaces, and 3MM PVC edgebanding to match the adjacent laminate / melamine color
2.) Door Fronts:	3/4" plywood with plastic laminate with 3MM PVC edgebanding to match the adjacent laminate color
3.) Shelf:	3/4" plywood with black melamine at semi-exposed surfaces with 3MM PVC edgebanding to match the adjacent melamine color
4.) CounterTops:	3/4" plywood with plastic laminate with 3MM PVC Edgebanding to match the adjacent laminate color

Materials

1.) Cabinets:	Wilsonart 4880-38 Carbon Mesh
2.) Drawer Fronts:	Wilsonart 4880-38 Carbon Mesh
3.) Shelf:	Black Melamine
4.) Countertops:	Wilsonart 4830K-18 Satin Stainless
5.) Adjustable Shelve Supports:	Standard Euro Style 5MM Pin System.
5.) Hinges:	European 120 Degree Concealed / Supports - 90 Degree Angle Brackets
6.) Legs:	1" -2" Concealed Adjustable. / Legs - 5" to 6" Aluminum or Chrome Adjustable
7.) Finger Pulls:	Amerock Current 3 inch Modern Polished Chrome Edge Cabinet Pull

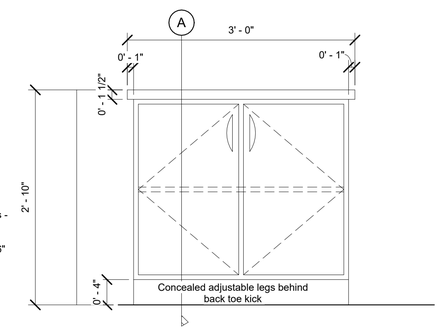

FRONT ELEVATION

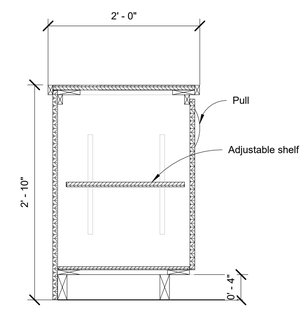

SECTION A

Service Desk Details

CONSTRUCTION AND MATERIAL NOTES:

Construction

1.) Cabinets:	3/4" plywood with plastic laminate at exposed surfaces, black melamine at semi-exposed surfaces, and 3MM PVC edgebanding to match the adjacent laminate / melamine color
2.) Door and Drawer Fronts:	3/4" plywood with plastic laminate with 3MM PVC edgebanding to match the adjacent laminate color
3.) Drawer Box:	1/2" plywood with black melamine at semi-exposed surfaces with 3MM PVC edgebanding to match the adjacent melamine color
4.) CounterTops:	3/4" plywood with plastic laminate with 3MM PVC Edgebanding to match the adjacent laminate color

Materials

1.) Cabinets:	Wilsonart 4880-38 Carbon Mesh
2.) Drawer and Drawer Fronts:	Wilsonart 4880-38 Carbon Mesh
3.) Drawer Box:	Black Melamine
4.) Countertops:	Wilsonart 4830K-18 Satin Stainless
5.) Adjustable Shelve Supports:	Standard Euro Style 5MM Pin System.
5.) Hinges:	European 120 Degree Concealed / Supports - 90 Degree Angle Brackets
6.) Legs:	1" -2" Concealed Adjustable. / Legs - 5" to 6" Aluminum or Chrome Adjustable
7.) Finger Pulls:	Amerock Current 3 inch Modern Polished Chrome Edge Cabinet Pull
8.) Locks:	Manufacturer standard

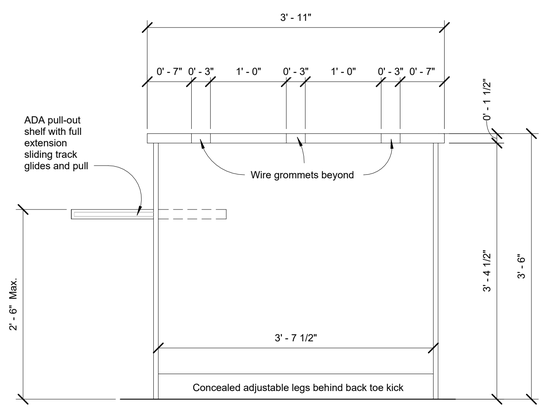

FRONT ELEVATION

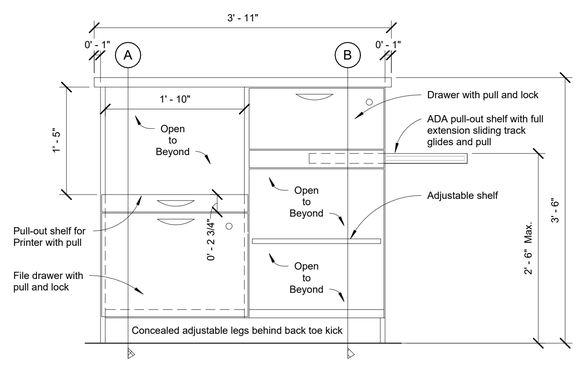

BACK ELEVATION

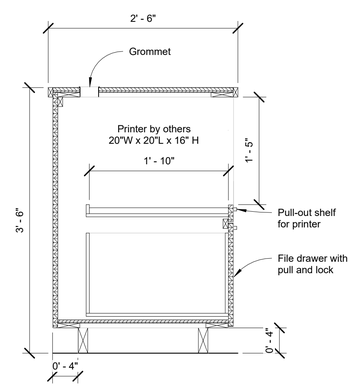

SECTION A

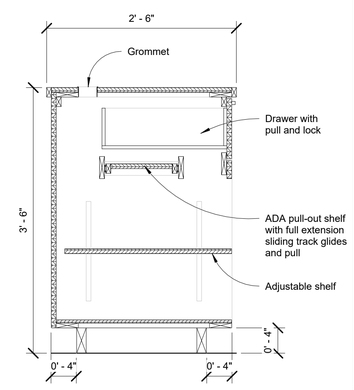

SECTION B

AHO ARCHITECTS, LLC
www.ahoarch.com

REGISTERED ARCHITECT TIMOTHY A. AHO 25347 STATE OF TEXAS
08/12/2026

Express Oil Change & Tire Engineers
Single Building / Right Hand Oil Change / Rear Enter / Side Tire Storage
Cross Roads, Texas (Aubrey)

FINAL

No.	Description	Date
IFP-0	Issue for permit	06/30/2026
IFB-0	Iss. for Bid / AHJ Rev.	08/12/2026

© 2026 Aho Architects, LLC. All Rights Reserved.

EOC Standards - Interior

Project number	26013
Date	06/30/2026
Drawn by	ARC
Checked by	N/A

G301

Scale: As indicated

9/1/2026 1:41:19 PM

COM*check* Software Version COMcheckWeb
Envelope Compliance Certificate

Project Information

Energy Code:	2015 IECC
Project Title:	26013 EOC Cross Roads, TX
Location:	Aubrey, Texas
Climate Zone:	3a
Project Type:	New Construction
Vertical Glazing / Wall Area:	5%

Construction Site:
4762 FM 720
Cross Roads, Texas 76227

Owner/Agent:
Express Oil Change & Tire Engineers
1880 Southpark Drive
Birmingham, Alabama 35244
205 600-6924
justin.duck@expressoil.com

Designer/Contractor:
Aho Architects, LLC
1855 Data Drive
Hoover, Alabama 35244
mbrunson@ahoarch.com

Additional Efficiency Package(s)

Credits: 1.0 Required 1.0 Proposed
Reduced Lighting Power, 1.0 credit

Building Area	Floor Area
1-Automotive Facility : Nonresidential	685

Envelope Assemblies

Assembly	Gross Area or Perimeter	Cavity R-Value	Cont. R-Value	Proposed U-Factor	Budget U-Factor$_{(a)}$
Roof: Insulation Entirely Above Deck, 3-Year-Aged Solar Reflectance Index = 85.00 (e), [Bldg. Use 1 - Automotive Facility]	685	---	25.0	0.039	0.039
Floor: Unheated Slab-On-Grade, [Bldg. Use 1 - Automotive Facility] (d)	182	---	---	0.730	0.730
NORTH					
Ext. Wall (South): Wood-Framed, 16in. o.c., [Bldg. Use 1 - Automotive Facility]	1010	20.0	0.0	0.064	0.064
Door #14: Wood, Swinging, [Bldg. Use 1 - Automotive Facility]	21	---	---	0.500	0.610
Door #2: Wood, Swinging, [Bldg. Use 1 - Automotive Facility]	21	---	---	0.500	0.610
EAST					
Ext. Wall (West @ Service Writing): Wood-Framed, 16in. o.c., [Bldg. Use 1 - Automotive Facility]	315	20.0	0.0	0.064	0.064
Door #1: Glass (over 50% glazing): Metal Frame, Entrance Door, Perf. Specs.: Product ID Solarban 90 on Clear, SHGC 0.23, PF 0.63, VT 0.41, [Bldg. Use 1 - Automotive Facility] (c)	21	---	---	0.450	0.770
Window B: Other Window: Fixed, Perf. Specs.: Product ID Solarban 90 on Clear, SHGC 0.23, PF 0.63, VT 0.41, [Bldg. Use 1 - Automotive Facility] (c)	85	---	---	0.450	0.460
Int. Wall (West @ Manager / Toilet 8): Wood-Framed, 16in. o.c., [Bldg. Use 1 - Automotive Facility]	315	20.0	0.0	0.064	0.064
Door15: Wood, Swinging, [Bldg. Use 1 - Automotive Facility]	21	---	---	0.500	0.610
Door 16: Wood, Swinging, [Bldg. Use 1 - Automotive Facility]	21	---	---	0.500	0.610
Int. Wall (West @ Break Room): Wood-Framed, 16in. o.c.,	315	20.0	0.0	0.064	0.064

Assembly	Gross Area or Perimeter	Cavity R-Value	Cont. R-Value	Proposed U-Factor	Budget U-Factor$_{(a)}$
[Bldg. Use 1 - Automotive Facility]					
SOUTH					
Ext. Wall (North): Wood-Framed, 16in. o.c., [Bldg. Use 1 - Automotive Facility]	1152	20.0	0.0	0.064	0.064
Door #13: Wood, Swinging, [Bldg. Use 1 - Automotive Facility]	21	---	---	0.500	0.610
Window A: Other Window: Fixed, Perf. Specs.: Product ID Solarban 90 on Clear, SHGC 0.23, PF 0.63, VT 0.41, [Bldg. Use 1 - Automotive Facility] (c)	12	---	---	0.450	0.460
WEST					
Ext. Wall (East @ Break Room): Concrete Block, 8in., Partially Grouted, Cells Empty, Light Density, Furring: Metal, [Bldg. Use 1 - Automotive Facility]	382	0.0	7.6	0.088	0.123
Window: Other Window: Fixed, Perf. Specs.: Product ID Solarban 90 on Clear, SHGC 0.23, VT 0.41, [Bldg. Use 1 - Automotive Facility] (c)	85	---	---	0.450	0.460
Int. Wall (East @ Manager / Toilet 8): Wood-Framed, 16in. o.c., [Bldg. Use 1 - Automotive Facility]	315	20.0	0.0	0.064	0.064
Int. Wall (East @ Toilet 1 / Mech): Wood-Framed, 16in. o.c., [Bldg. Use 1 - Automotive Facility]	444	20.0	0.0	0.064	0.064
Door 5: Wood, Swinging, [Bldg. Use 1 - Automotive Facility]	21	---	---	0.500	0.610

(a) Budget U-factors are used for software baseline calculations ONLY, and are not code requirements.
(b) 'Other' components require supporting documentation for proposed U-factors.
(c) Fenestration product performance must be certified in accordance with NFRC and requires supporting documentation.
(d) Slab-On-Grade proposed and budget U-factors shown in table are F-factors.
(e) High albedo roof requirement options: 1) 3-year aged solar reflectance >= 0.55 thermal emittance >= 0.75, 2) 3-year aged solar reflectance index >= 64.0, 3) Initial year aged solar reflectance >= 0.70 thermal emittance >= 0.75, 4) Initial year aged solar reflectance index >= 82.0.

Envelope PASSES: Design 5% better than code

Envelope Compliance Statement

Compliance Statement: The proposed envelope design represented in this document is consistent with the building plans, specifications, and other calculations submitted with this permit application. The proposed envelope systems have been designed to meet the 2015 IECC requirements in COM*check* Version COMcheckWeb and to comply with any applicable mandatory requirements listed in the Inspection Checklist.

Joseph Emerson - Intern Interior Designer		07/14/2026
Name - Title	Signature	Date

COM*check* Software Version COMcheckWeb
Inspection Checklist

Energy Code: 2015 IECC

Requirements: 0.0% were addressed directly in the COM*check* software

Text in the "Comments/Assumptions" column is provided by the user in the COMcheck Requirements screen. For each requirement, the user certifies that a code requirement will be met and how that is documented, or that an exception is being claimed. Where compliance is itemized in a separate table, a reference to that table is provided.

Section # & Req.ID	Plan Review	Complies?	Comments/Assumptions
C103.2 [PR1][1]	Plans and/or specifications provide all information with which compliance can be determined for the building envelope and document where exceptions to the standard are claimed.	☐Complies ☐Does Not ☐Not Observable ☐Not Applicable	
C402.4.1 [PR10][1]	The vertical fenestration area <= 30 percent of the gross above-grade wall area.	☐Complies ☐Does Not ☐Not Observable ☐Not Applicable	
C402.4.1 [PR11][1]	The skylight area <= 3 percent of the gross roof area.	☐Complies ☐Does Not ☐Not Observable ☐Not Applicable	
C402.4.2 [PR14][1]	In enclosed spaces > 2,500 ft2 directly under a roof with ceiling heights >15 ft. and used as an office, lobby, atrium, concourse, corridor, storage, gymnasium/exercise center, convention center, automotive service, manufacturing, non-refrigerated warehouse, retail store, distribution/sorting area, transportation, or workshop, the following requirements apply: (a) the daylight zone under skylights is >= half the floor area; (b) the skylight area to daylight zone is >= 3 percent with a skylight VT >= 0.40; or a minimum skylight effective aperture >= 1 percent.	☐Complies ☐Does Not ☐Not Observable ☐Not Applicable	
C406 [PR9][1]	Plans, specifications, and/or calculations provide all information with which compliance can be determined for the additional energy efficiency package options.	☐Complies ☐Does Not ☐Not Observable ☐Not Applicable	

Additional Comments/Assumptions:

1 High Impact (Tier 1)	2 Medium Impact (Tier 2)	3 Low Impact (Tier 3)

Section # & Req.ID	Footing / Foundation Inspection	Complies?	Comments/Assumptions
C303.2 [FO4][1]	Slab edge insulation installed per manufacturer's instructions.	☐Complies ☐Does Not ☐Not Observable ☐Not Applicable	
C303.2.1 [FO6][1]	Exterior insulation protected against damage, sunlight, moisture, wind, landscaping and equipment maintenance activities.	☐Complies ☐Does Not ☐Not Observable ☐Not Applicable	
C104 [FO3][1]	Installed slab-on-grade insulation type and R-value consistent with insulation specifications reported in plans and COMcheck reports.	☐Complies ☐Does Not ☐Not Observable ☐Not Applicable	*See the Envelope Assemblies table for values.*
C402.2.6 [FO12][1]	Radiant heating systems panels insulated to >=R-3.5 on face opposite space being heated.	☐Complies ☐Does Not ☐Not Observable ☐Not Applicable	*See the Envelope Assemblies table for values.*

Additional Comments/Assumptions:

1 High Impact (Tier 1)	2 Medium Impact (Tier 2)	3 Low Impact (Tier 3)

Section # & Req.ID	Framing / Rough-In Inspection	Complies?	Comments/Assumptions
C303.1.3 [FR12][1]	Fenestration products rated in accordance with NFRC.	☐Complies ☐Does Not ☐Not Observable ☐Not Applicable	
C303.1.3 [FR13][1]	Fenestration products are certified as to performance labels or certificates provided.	☐Complies ☐Does Not ☐Not Observable ☐Not Applicable	
C402.4.3 [FR10][1]	Vertical fenestration SHGC value.	☐Complies ☐Does Not ☐Not Observable ☐Not Applicable	*See the Envelope Assemblies table for values.*
C402.4.3, C402.4.3.4 [FR8][1]	Vertical fenestration U-Factor.	☐Complies ☐Does Not ☐Not Observable ☐Not Applicable	*See the Envelope Assemblies table for values.*
C402.4.4 [FR14][1]	U-factor of opaque doors associated with the building thermal envelope meets requirements.	☐Complies ☐Does Not ☐Not Observable ☐Not Applicable	*See the Envelope Assemblies table for values.*
C402.5.1 [FR16][1]	The building envelope contains a continuous air barrier that is sealed in an approved manner and either constructed or tested in an approved manner. Air barrier penetrations are sealed in an approved manner.	☐Complies ☐Does Not ☐Not Observable ☐Not Applicable	
C402.5.2, C402.5.4 [FR18][1]	Factory-built fenestration and doors are labeled as meeting air leakage requirements.	☐Complies ☐Does Not ☐Not Observable ☐Not Applicable	
C402.5.7 [FR17][1]	Vestibules are installed on all building entrances. Doors have self-closing devices.	☐Complies ☐Does Not ☐Not Observable ☐Not Applicable	

Additional Comments/Assumptions:

1 High Impact (Tier 1)	2 Medium Impact (Tier 2)	3 Low Impact (Tier 3)

Section # & Req.ID	Mechanical Rough-In Inspection	Complies?	Comments/Assumptions
C402.5.5, C403.2.4.3 [ME3][1]	Stair and elevator shaft vents have motorized dampers that automatically close.	☐Complies ☐Does Not ☐Not Observable ☐Not Applicable	

Additional Comments/Assumptions:

1 High Impact (Tier 1)	2 Medium Impact (Tier 2)	3 Low Impact (Tier 3)

Section # & Req.ID	Insulation Inspection	Complies?	Comments/Assumptions
C303.1 [IN3][1]	Roof insulation installed per manufacturer's instructions. Blown or poured loose-fill insulation is installed only where the roof slope is <=3 in 12.	☐Complies ☐Does Not ☐Not Observable ☐Not Applicable	
C303.1 [IN10][1]	Building envelope insulation is labeled with R-value or insulation certificate providing R-value and other relevant data.	☐Complies ☐Does Not ☐Not Observable ☐Not Applicable	
C303.2 [IN7][1]	Above-grade wall insulation installed per manufacturer's instructions.	☐Complies ☐Does Not ☐Not Observable ☐Not Applicable	
C303.2.1 [IN14][1]	Exterior insulation is protected from damage with a protective material. Verification for exposed foundation insulation may need to occur during Foundation Inspection.	☐Complies ☐Does Not ☐Not Observable ☐Not Applicable	
C402.2.1 [IN17][1]	Insulation intended to meet the roof insulation requirements cannot be installed on top of a suspended ceiling. Mark this requirement compliant if insulation is installed accordingly.	☐Complies ☐Does Not ☐Not Observable ☐Not Applicable	
C104 [IN6][1]	Installed above-grade wall insulation type and R-value consistent with insulation specifications reported in plans and COMcheck reports.	☐Complies ☐Does Not ☐Not Observable ☐Not Applicable	*See the Envelope Assemblies table for values.*
C104 [IN8][1]	Installed floor insulation type and R-value consistent with insulation specifications reported in plans and COMcheck reports.	☐Complies ☐Does Not ☐Not Observable ☐Not Applicable	*See the Envelope Assemblies table for values.*
C402.2.6 [IN18][1]	Radiant panels and associated components, designed for heat transfer from the panel surfaces to the occupants or indoor space are insulated with a minimum of R-3.5.	☐Complies ☐Does Not ☐Not Observable ☐Not Applicable	
C402.3 [IN5][1]	High-albedo roofs satisfy one of the following: 3-year-aged solar reflectance >= 0.55 and thermal emittance >= 0.75 or 3-year-aged solar reflectance index >= 64.0.	☐Complies ☐Does Not ☐Not Observable ☐Not Applicable	
C104 [IN2][1]	Installed roof insulation type and R-value consistent with insulation specifications reported in plans and COMcheck reports. For some ceiling systems, verification may need to occur during Framing Inspection.	☐Complies ☐Does Not ☐Not Observable ☐Not Applicable	*See the Envelope Assemblies table for values.*
C402.5.1.1 [IN1][1]	All sources of air leakage in the building thermal envelope are sealed, caulked, gasketed, weather stripped or wrapped with moisture vapor-permeable wrapping material to minimize air leakage.	☐Complies ☐Does Not ☐Not Observable ☐Not Applicable	

Additional Comments/Assumptions:

1 High Impact (Tier 1)	2 Medium Impact (Tier 2)	3 Low Impact (Tier 3)

Section # & Req.ID	Final Inspection	Complies?	Comments/Assumptions
C402.5.3 [FI51][1]	Where open combustion air ducts provide combustion air to open combustion fuel burning appliances, the appliances and combustion air opening are located outside the building thermal envelope or enclosed in a room, isolated from inside the thermal envelope. Such rooms are sealed and insulated.	☐Complies ☐Does Not ☐Not Observable ☐Not Applicable	
C402.5.6 [FI37][1]	Weatherseals installed on all loading dock cargo doors.	☐Complies ☐Does Not ☐Not Observable ☐Not Applicable	
C402.5.8 [FI26][1]	Recessed luminaires in thermal envelope to limit infiltration and be IC rated and labeled. Seal between interior finish and luminaire housing.	☐Complies ☐Does Not ☐Not Observable ☐Not Applicable	

Additional Comments/Assumptions:

1 High Impact (Tier 1)	2 Medium Impact (Tier 2)	3 Low Impact (Tier 3)

AHO ARCHITECTS, LLC
www.ahoarch.com

REGISTERED ARCHITECT TIMOTHY A. AHO 25347 STATE OF TEXAS
08/12/2026

Express Oil Change & Tire Engineers
Single Building / Right Hand Oil Change / Rear Enter / Side Tire Storage
Cross Roads, Texas (Aubrey)

FINAL

No.	Description	Date
IFP-0	Issue for permit	06/30/2026
IFB-0	Iss. for Bid / AHJ Rev.	08/12/2026

© 2026 Aho Architects, LLC. All Rights Reserved.

Building COMCheck

Project number	26013
Date	06/30/2026
Drawn by	ARC
Checked by	N/A

G400

Scale

9/1/2026 1:41:21 PM

1 BUILDING PLANNING & DESCRIPTION

- [x] NEW CONSTRUCTION
- [ ] LEASE SPACE BUILD-OUT (LSBO)
- [ ] SUBSTANTIAL IMPROVEMENT
- [ ] SHELL BUILDING
- [ ] CHANGE OF OCCUPANCY
- [ ] OTHER: _____

MIXED OCCUPANCY
- [ ] SINGLE OCCUPANCY
- [ ] SEPARATED USE
- [x] NON-SEPARATED USE

(SECTION 508.3 OR 508.4 IBC 2015)

TYPE OF CONSTRUCTION: VB *(CHAPTER 6 IBC 2015)*

HEIGHT LIMITATION: 40' - 0" AREA LIMITATION: 9,000 s.f. *(TABLE 503 IBC 2015)*

FRONTAGE INCREASE CALCULATIONS ARE SHOWN ON SHEET: N/A

BUILDING VALUATION

BUILDING NUMBER: 1 OF 1

ADDRESS: 4762 FM 720 & HWY 380

CITY, ST: Cross Roads, Texas ZIP CODE: 76227 SUITE: N/A

DCAD # OR PROPERTY TAX #: 1072432 FLOODPLAIN: Zone X

(http://www.dentoncad.com)

PROJECT INFORMATION

GROSS SQUARE FOOTAGE: 7,036 s.f. #OF FLOORS: 1 + Pit HEIGHT: 28' - 7 1/2"

ESTIMATED COST OF CONSTRUCTION: $1,800,000

T.D.L.R.# TABS2026025360 *(REQUIRED FOR CONSTRUCTION OVER $50,000)*

TEXAS DEPARTMENT OF LICENSING AND REGULATIONS
(https://www.tdlr.texas.gov/AB.DataSearch/)
TELEPHONE: (512) 463-6599 TOLL FREE (IN TEXAS): 800-803-99202
FAX: (512) 475-2871 RELAY TEXAS-TDD: 800-735-2989

SHELL BUILDING PERMIT #: N/A CIVIL PROJECT #: TBD

LIST BELOW THE PURPOSE/USE OF THE BUILDING OR AREA BEING REVIEWED.

Automotive repair garage used for general service of non-commercial vehicles.

2 OCCUPANCY TYPE AND LOAD

CHAPTER 2, 3 & TABLE 1004.1.2 IBC 2015

OCCUPANCY CLASSIFICATION TYPES

A-1	A-2	A-3	A-4	A-5	B	E
F-1	F-2	H-1	H-2	H-3	H-4	H-5
I-1	I-2	I-3	I-4	M	R-1	R-2
	R-3	R-4	S-1	S-2	U	

BREAK DOWN AREAS AND OCCUPANT LOADS PER FLOOR

OCCUPANCY CLASSIFICATION	SPECIFIC USE	SQUARE FOOTAGE	SF PER OCCUPANT	DESIGN OCCUPANTS
S-1	Corridor	85	200	0.43
S-1	Oil Change	1254	200	6.27
S-1	Work Room	127	200	0.63
S-1	Service	2476	200	12.38
S-1	Storage	258	300	0.86
S-1	Storage	500	300	1.67
S-1	Pit	1218	200	6.09
B	Service Writing	141	150	0.94
B	Waiting	188	150	1.25
B	Toilet	50	150	0.34
B	Manager	54	150	0.36
B	Toilet	46	150	0.31
B	Break Room	118	150	0.79
TOTAL		6515		32.31

3 MEANS OF EGRESS

CHAPTER 10 IBC 2015

MEANS OF EGRESS	# OF REQUIRED EXITS	# OF EXITS PROVIDED	SHEET #
STAIRWAYS (PER FLOOR)	1	1	LS102
EGRESS @ 1ST FL OR LSBO	2	5	LS102

(SECTION 1005.3 IBC 2015)

PANIC HARDWARE ON EXIT DOORS? YES [x] NO [ ] *(SECTION 1010.1.9 IBC 2015)*

STAIRWAYS *(SECTION 1011 IBC 2015)*

MINIMUM CLEAR WIDTH SHOWN ON: LS102 *(EACH STAIRWELL)*

EGRESS WIDTHS ARE SHOWN ON: LS102

ACCESSIBLE AREAS OF REFUGE & 2-WAY COMMUNICATIONS SHOWN ON: N/A

(SECTION 1007.3 TO 1009.6 IBC 2015)

EXIT SIGNS/EGRESS ILLUMINATION *(SECTION 1008 & 1013 IBC 2015)*

REQUIRED AND SHOWN ON: LS102, E200, E201 *(HIGHLIGHT ON PLANS)*

EXTERIOR EMERGENCY LIGHTING PROVIDED? YES [x] NO [ ]

EXIT TRAVEL DISTANCE *(TABLE 1016.2 IBC 2015)*

OCCUPANCY TYPE	MAX TRAVEL DISTANCE	PROVIDE TRAVEL DISTANCE	SHEET #
S-1	250' - 0"	75' - 5"	LS102
B	300' - 0"	77' - 4"	LS102

ELEVATORS

NEW [ ] EXISTING [ ] ELEVATOR KEYBOX LOCATED IN LOBBY? YES [ ] NO [ ]
(MUST BE WITHIN 20' OF THE CALL BUTTON)

4 FIRE PROTECTION SYSTEMS

CHAPTER 9 IBC & IFC 2015

ALL FIRE PROTECTION PLANS SHALL BE SUBMITTED FOR REVIEW AFTER BUILDING PERMIT HAS BEEN ISSUED (I.E. UNDERGROUND FIRE LINE, SPRINKLER SYSTEM, FIRE ALARM SYSTEM, STANDPIPE, FIRE PUMP ROOM, AND FIRE PROTECTION WATER SUPPLY SYSTEMS)

AUTOMATIC FIRE SPRINKLER SYSTEM/ALTERNATIVE AUTOMATIC FIRE EXTINGUISHING SYSTEM

ALL SPRINKLERS SHALL COMPLY WITH MONITORING

(SECTION 903 DC FIRE CODE AMENDMENTS & SECTION 903.4 IFC 2015)

[x] FIRE SPRINKLER SYSTEM (DEFERRED SUBMITTAL) [ ] NOT REQUIRED PER SECTION 903

SYSTEM PROVIDED:
- [x] NFPA 13
- [ ] NFPA 13R
- [ ] NFPA 13D
- [ ] OTHER: _____

FIRE DEPARTMENT ACCESS TO SPRINKLER CONTROLS:
- [x] SPRINKLER RISER ROOM OR POST INDICATOR VALVE SHOWN ON: FP1.01 *(SECTION 901.4.6 DC AMENDMENTS IFC 2015)*
- [x] FDC SHOWN ON: FP1.01 *(FDC SHALL COMPLY WITH SECTION 912 IFC 2015)*

SUPPRESSION SYSTEM PROVIDED *(SECTION 904 IFC 2015)*
- [x] REQUIRED AND SHOWN ON: FP0.01, FP1.01
- [ ] NOT REQUIRED

STANDPIPE SYSTEM & HOSE CONNECTIONS *(SECTION 905 IFC 2015)*
(I.E. IN STAIRWAYS, STAGES, MALLS)
- [ ] PROVIDED AS NOTED ON: _____, TYPE OF SYSTEM PROVIDED: _____ *(CLASS I, II OR III)*
- [x] NOT REQUIRED PER SECTION 905

PORTABLE FIRE EXTINGUISHERS *(SECTION 906 IFC 2015)*
- [x] PROVIDED AS NOTED ON: LS102, NUMBER PROVIDED: 6 *(HIGHLIGHT ON PLANS)*

FIRE ALARM & DETECTION SYSTEMS *(SECTION 907 & DC AMENDMENTS IFC 2015)*
- [x] FIRE ALARM SYSTEM (DEFERRED SUBMITTAL)
- [ ] NOT REQUIRED PER SECTION 907
- [ ] EMERGENCY VOICE EVACUATION
- [ ] OTHER: _____
- [ ] DEDICATED FUNCTION (SPRINKLER MONITORING, ELEVATOR RECALL, PRE-ACTION, EMERGENCY ALARM, SMOKE CONTROL)

HVAC & AIR DISTRIBUTION SYSTEM CONTROLS *(SECTION 907.2.13.1.2 IFC 2015)*
- [ ] SMOKE DETECTORS PROVIDED TO SHUT DOWN UNITS OVER 2,000 CFM PROVIDED ON: _____
- [x] NO HVAC UNITS OVER 2,000 CFM
- [ ] FIRE/SMOKE DAMPERS IN THE BUILDING SHOWN ON: _____
- [x] NO FIRE/SMOKE DAMPERS IN THE BUILDING

SMOKE CONTROL SYSTEMS *(SECTION 909 IFC 2015)(I.E. FOR HIGH RISE, ATRIUMS OR STAIRWAY PRESSURIZATION)*
- [ ] PROVIDED AS NOTED ON: _____
- [x] NOT REQUIRED PER SECTION 909

SMOKE & HEAT VENTILATION *(SECTION 910 IFC 2015)*
- [ ] CALCULATIONS PROVIDED AS NOTED ON: _____
- [x] NOT REQUIRED PER SECTION 910

NOTE: WHERE AREAS OF THE BUILDING ARE EQUIPPED WITH EARLY SUPPRESSION FAST-RESPONSE (ESFR) SPRINKLERS, AUTOMATIC SMOKE AND HEAT VENTS SHALL BE INSTALLED PER MANUFACTURERS SPECIFICATIONS, MEETING LOCAL JURISDICTION REQUIREMENTS.

5 FIRE-RESISTANCE RATE CONSTRUCTION

CHAPTER 6, 7 AND 10 IBC 2015

SHOW DETAILS OF FIRE WALLS OR FIRE BARRIERS MEETING HORIZONTAL WALLS AND ROOF DECKS
(SEE SECTION 706.5, 706.6 & 707.5 IBC 2015)

FIRE-RESISTANCE RATING REQUIREMENTS *(TABLES 601 & 602 IBC 2015)*

BUILDING ELEMENTS	HOURS REQUIRED	HOURS PROVIDED	UL OR IBC STANDARD USED & DESIGN DETAIL SHOWN ON
STRUCTURAL FRAME	0	0	
EXTERIOR BEARING WALLS	0	0	
EXTERIOR NON-BEARING WALLS	0	0	
INTERIOR BEARING WALLS	0	N/A	
INTERIOR NON-BEARING WALLS	0	0	
FLOOR CONSTRUCTION	0	0	
ROOF CONSTRUCTION	0	0	
STAIRWELLS *(SECTION 1011)*	N/A	N/A	
ELEVATOR SHAFTS *(SECTION 713)*	N/A	N/A	
CORRIDORS *(SECTION 1020)*	0	0	
FIRE RATED DOORS *(TABLE 716.5)*	45 min.	45 min.	
DEMISING/PARTITION WALL *(SECTION 708)*	N/A	N/A	
FIRE BARRIER *(SECTION 707)*	N/A	N/A	
FIRE WALL *(SECTION 706)*	N/A	N/A	

DRAFTSTOPS: [ ] YES, SHOWN ON: _____ [ ] NO (SPRINKLED ATTIC) [x] N/A *(SECTION 718.4)*

HAVE YOU CHECKED WIDTH OF OPENINGS IN FIRE RATED WALLS? YES [x] NO [ ]
(TABLE 705.8, SECTION 706.8 & 707.6 IBC 2015)

FIRE SEPARATION DISTANCE (FEET) *(SECTION 602 IBC 2015)*	> 30'	> 30'	> 30'	> 30'
	NORTH	SOUTH	EAST	WEST

ROOF COVERING CLASSIFICATION PROVIDED: A [ ] B [ ] C [x]
(TABLE 1505.1 IBC 2015)

6 WATER SUPPLY (FOR FIREFIGHTING)

CHAPTER 5, APPENDIX B & C IFC 2015

6,200 s.f. GROSS SIZE OF BUILDING IN SQUARE FEET *(INCLUDE ALL OVERHANGS UNDER ROOF)*

PUBLIC WATER SUPPLY WITH FIRE HYDRANTS
(FOR PROPOSED AND EXISTING FIRE HYDRANTS ONLY)

NAME OF THE MUNICIPAL UTILITY DISTRICT: Mustang SUD

NUMBER OF HYDRANTS WITHIN 400 FT (NON-SPRINKLED) OR 600 FT (SPRINKLED) OF BUILDING: 2, SHOWN ON: C-301

REQUIRED GPM: 2,250 DURATION: 2 *(TABLE B105.1 IFC 2015)*

75% REDUCTION? YES [x] NO [ ] *(MUST MAINTAIN MINIMUM OF 1,500 GPM)*

WATER SOURCE FOR RURAL AREAS WITHOUT FIRE HYDRANTS
(COMPLETE THE FIRE FLOW CALCULATOR)
- [ ] ***DRY HYDRANT
- [ ] ABOVEGROUND STORAGE
- [ ] UNDERGROUND STORAGE
- [ ] OTHER: _____

7 FIRE LANE ACCESS

CHAPTER 5 DC AMENDMENTS & APPENDIX D IFC 2015

FIRE LANE LAYOUT PLAN, WHICH SHALL INCLUDE THE SITE PLAN, THE FIRE LANE & FIRE HYDRANTS, IS SHOWN ON: C-301 *(HIGHLIGHT THE FIRE HYDRANT LOCATIONS ON THE PLANS)* AERIAL ACCESS LAYOUT, FOR BUILDINGS OVER 30 FT, IS SHOWN ON: C-301

FIRE LANE LAYOUT, GENERAL REQUIREMENTS
https://dentoncounty.com/-/media/Departments/Emergency-Services/Emergency-Services/PDFs/Firelane-Layout-and-General-Requirements.pdf?la=en

8 INTERIOR FINISH

CHAPTER 8 & TABLE 803.11 IBC 2015

OCCUPANCY GROUP	EXIT ENCLOSURES AND EXIT PASSAGEWAYS	CORRIDORS	ROOMS AND ENCLOSED SPACES	SHEET #
S-1	B	B	C	
B	A	B	C	

9 STORAGE: STANDARD & HIGH PILED

CHAPTER 32 IFC 2015

YES [x] NO [ ] PRODUCTS BEING STORED: Rubber Tires
YES [x] NO [ ] STORAGE PACKAGING *(I.E. PALLETS, RACKS, SOLID PILED, DRUMS, CARDBOARD BOXES, WRAPPED IN PLASTIC, ETC.)*: Racks
YES [x] NO [ ] MAXIMUM HEIGHT OF COMMODITY: 12' - 0"
YES [x] NO [ ] ***THIS BUILDING IS DESIGNED FOR THE INTENT OF HIGH PILED STORAGE.

YES [ ] NO [x] FIRE DEPARTMENT ACCESS DOORS
YES [ ] NO [x] HIGH PILED STORAGE RACK LAYOUT/ELEVATIONS, CODE ANALYSIS, ETC. SHOWN ON: _____

10 HAZARDOUS MATERIALS

CHAPTER 50 IFC 2015

YES [ ] NO [x] ***THIS BUILDING IS DESIGNED FOR THE INTENT OF HAZARDOUS MATERIAL STORAGE. IF YES, THEN PROVIDE ALL HMIS SUMMARY AND MSDS REPORTS.
YES [ ] NO [x] EMERGENCY ALARM SYSTEM REQUIRED PER SECTION 5004.9 IFC 2015
YES [ ] NO [x] VENTILATION WITH EMERGENCY ALARM STAND BY POWER PER SECTION 5004.3 AND 5004.7 IFC 2015.
YES [ ] NO [x] SPILL CONTROL AND SECONDARY CONTAINMENT PER SECTION 5004.2 IFC 2015

11 SPECIAL CONDITIONS

PROPERTIES WITH FENCE AND GATES SHALL PROVIDE A 911 KEY BOX AT ENTRY GATE

YES [ ] NO [x] ATRIUM(S) PER 404 IBC 2015?
YES [ ] NO [x] HIGH RISE BLDG PER 403 IBC 2015?
YES [ ] NO [x] ANY FUEL STORAGE TANKS PER 5704 IFC 2015?
YES [ ] NO [x] SEPTIC SYSTEM? SUBMIT PLANS TO ENVIRONMENTAL HEALTH FOR REVIEW.
YES [ ] NO [x] PAINT SPRAY BOOTHS, COATINGS, DIPPING OR INDUSTRIAL OVENS USED PER 2404, 2405, 2406 AND CHAPTER 30 IFC 2015?
YES [ ] NO [x] MEDICAL GAS PER 5306 IFC 2015?
YES [ ] NO [x] OTHER: _____
YES [x] NO [ ] PUBLIC UTILITIES?

COMMENTS & NOTES

A COPY OF THESE APPROVED CONSTRUCTION PLANS MUST BE KEPT AT PROJECT SITE FOR THE FINAL INSPECTION OF THE BUILDING

PROJECT NUMBER: IFC 2015

REVIEWER'S STAMP

THE PROJECT KNOWN AS
(MUST BE THE NAME OF BUSINESS/DBA IF BUILDING IS FOR A SPECIFIC COMPANY)

_____

WAS ACCEPTED BY DENTON COUNTY FOR THE PURPOSES LISTED BELOW:

REVIEWER'S SIGNATURE BLOCK

PERMIT OFFICE

BY AS TO COMPLIANCE WITH COUNTY FIRE CODE DATE

THE PROJECT WAS REVIEWED, HOWEVER, THIS DOES NOT MEAN THE ENTIRE PROJECT, INCLUDING ALL SUPPORTING DATA AND CALCULATIONS HAVE BEEN COMPLETELY CHECKED AND VERIFIED. THESE DRAWINGS ARE SIGNED, DATED AND SEALED BY A PROFESSIONAL ENGINEER / ARCHITECT LICENSED TO PRACTICE IN THE STATE OF TEXAS, WHICH THEREFORE CONVEYS THE PROFESSIONAL'S RESPONSIBILITY AND ACCOUNTABILITY. THIS ACCEPTANCE DOES NOT RELIEVE ANY PARTY FROM COMPLYING WITH ANY OTHER LEGALLY ADOPTED REGULATION OR ORDINANCE RELATED TO LAND DEVELOPMENT.

CERTIFICATION

I, _____, A LICENSED PROFESSIONAL ENGINEER/ARCHITECT IN THE STATE OF TEXAS DO HEREBY CERTIFY THAT THE INFORMATION PRESENTED ON THIS SHEET IS TRUE AND CORRECT TO THE BEST OF MY KNOWLEDGE. I AM/AM NOT A DESIGNER OF RECORD FOR THIS PROJECT. THE PROJECT CONSISTS OF DRAWING SHEETS _____ THROUGH _____.
ENGINEERING FIRM _____ FIRM# _____

SEAL SIGNATURE DATE

DENTON COUNTY (IFC 2015)

FIRE CODE DESIGN AND COMPLIANCE REVIEW SHEET VERSION 2.1 (MAY 2019)

https://dentoncounty.com/-/media/Departments/Emergency-Services/Emergency-Services/PDFs/Denton-County-Fire-Code.pdf?la=en

FM-09

REVISIONS (DO NOT USE THIS BLOCK UNTIL AFTER PERMIT IS ISSUED)

DATE	SHEET NO(S)	DESCRIPTION	REVIEWER	COUNTY P.E.

FIRE CODE REVIEW

SHEET NUMBER

_____ OF _____

AHO ARCHITECTS, LLC
www.ahoarch.com

REGISTERED ARCHITECT TIMOTHY A. AHO 25347 STATE OF TEXAS
08/12/2026

Express Oil Change & Tire Engineers
Single Building / Right Hand Oil Change / Rear Enter / Side Tire Storage
Cross Roads, Texas (Aubrey)

FINAL

No.	Description	Date
IFP-0	Issue for permit	06/30/2026
IFB-0	Iss. for Bid / AHJ Rev.	08/12/2026

© 2026 Aho Architects, LLC. All Rights Reserved.

Life Safety / Code Summary

Project number	26013
Date	06/30/2026
Drawn by	ARC
Checked by	N/A

LS101

Scale

9/1/2026 1:41:22 PM

LIFE SAFETY SYMBOL LEGEND

- Exit Sign
- HC EXIT 32" — Handicap Accessible Egress Width
- 32" — Exit from room (# = minimum clear width in inches)
- Maneuvering clearances at manual swinging doors
- # — Travel Distance
- 1 Hour Rated

Keynote Schedule

Tag	Text
3	Location of 30" wide refrigerator (By Others).
15	HVAC condensing unit. See Mechanical.
20	4" diameter painted concrete-filled steel pipe bollard. Color as indicated on Finish Schedule. Paint embedded portion of bollard. Use primer and two finish coats. See Details. See Specification 055000 Metal Fabrications.
26	Fire Department Lock Box. Locate as directed by the Local Fire Marshal or AHJ. See Specification 104413 Fire Department Lock Box.
33	ADA compliant room / exit sign. See Details.
35	Submersible foundation sump pump. Provide Zoeller M98 or comparable product. Coordinate location with Civil and tie into Civil's storm drainage system.
38	Eyewash station. See Plumbing.
58	Verify location and size of pit exhaust opening with Structural and Mechanical drawings.
59	Gas meter. See Plumbing.
70	Full-height FRP, entire wall, unless otherwise noted. See Specification 066400 Plastic Paneling (Fiberglass Reinforced Panels).

Keynote Schedule

Tag	Text
108	Gray shading indicates these walls are the boundaries for the building thermal envelope assembly.
144	Electrical meter. See Electrical.
186	Coffee cabinet.
213	8-foot-high chain-link fence with 3'-0"x7'-0" gate. Fence poles to be surface mounted.
214	10K Lift (By Others).
215	12K Lift (By Others).
216	Tire changer (By Others).
217	Wheel balancer (By Others).
218	Service Writing Desk.
219	Air compressor (By Others).
220	Scissor lift alignment (By Others).
221	Scissor lift alignment console (By Others). Provide conduit in slab as required. See alignment lift specifications (By Others).
222	Alignment scarecrow (By Others).

Keynote Schedule

Tag	Text
223	Work bench (By Others).
224	Strut compressor (By Others).
225	Lube console (By Others).
226	Computer podium (By Others).
227	Cashier computer station (By Others). Clear opening for cashier computer station must be 38 ½" wide minimum. No Exceptions.
229	Rolling drain pan (By Others).
230	Tool cart (By Others).
231	Beverage refrigerator (By Others).
232	Bracket mounted fire extinguisher. See Specification Section 104416 Fire Extinguishers. Provide sign at all fire extinguisher locations which may be visually obstructed. See Details.

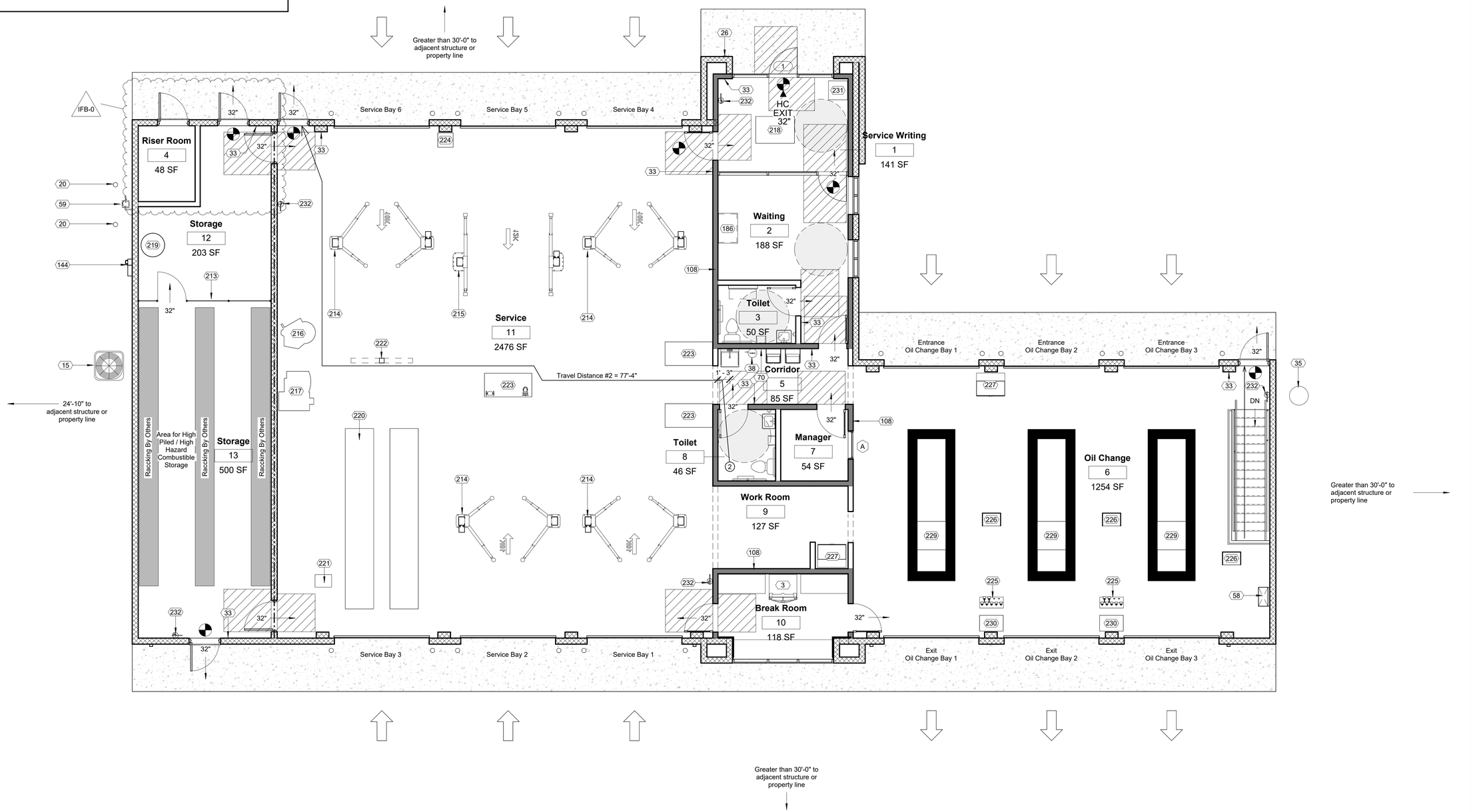

1 05_Life Safety Plan_Main
3/16" = 1'-0"

AHO ARCHITECTS, LLC
www.ahoarch.com

REGISTERED ARCHITECT TIMOTHY A. AHO 25347 STATE OF TEXAS
08/12/2026

Express Oil Change & Tire Engineers

Single Building / Right Hand Oil Change / Rear Enter / Side Tire Storage

Cross Roads, Texas (Aubrey)

FINAL

No.	Description	Date
IFP-0	Issue for permit	06/30/2026
IFB-0	Iss. for Bid / AHJ Rev.	08/12/2026

© 2026 Aho Architects, LLC. All Rights Reserved.

Life Safety Plan - Main

Project number	26013
Date	06/30/2026
Drawn by	ARC
Checked by	N/A

LS102

Scale As indicated

9/1/2026 1:41:24 PM

LIFE SAFETY SYMBOL LEGEND

- Exit Sign
- HC EXIT 32" — Handicap Accessible Egress Width
- 32" — Exit from room (# = minimum clear width in inches)
- Maneuvering clearances at manual swinging doors
- # — Travel Distance
- 1 Hour Rated

Keynote Schedule

Tag	Text
35	Submersible foundation sump pump. Provide Zoeller M98 or comparable product. Coordinate location with Civil and tie into Civil's storm drainage system.
38	Eyewash station. See Plumbing.
46	Oil tank stairs (By Others).
58	Verify location and size of pit exhaust opening with Structural and Mechanical drawings.
223	Work bench (By Others).
232	Bracket mounted fire extinguisher. See Specification Section 104416 Fire Extinguishers. Provide sign at all fire extinguisher locations which may be visually obstructed. See Details.
233	275-gallon Class IIIB new oil tank (By Others).
234	928-gallon Class IIIB new oil tank (By Others). Provide a 2" concrete walkway cap with non-slip surface over (oil tank By Others). Coordinate with equipment supplier prior to installation.
235	928-gallon Class IIIB waste oil tank (By Others). Provide a 2" concrete walkway cap with non-slip surface over (oil tank By Others). Coordinate with equipment supplier prior to installation.

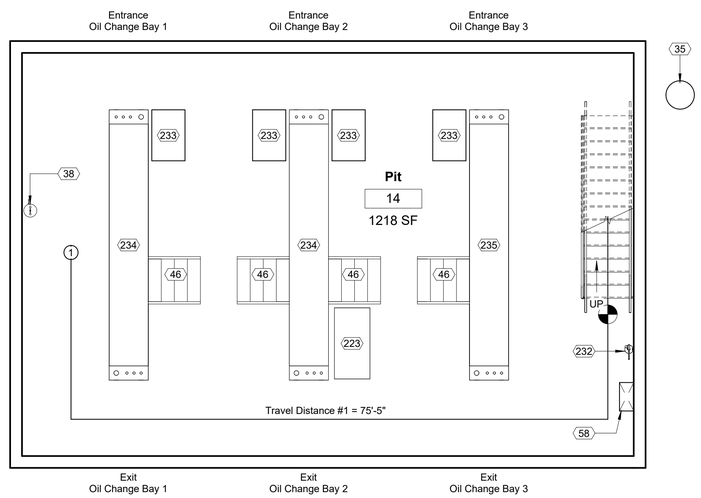

1 04_Life Safety Plan_Pit
3/16" = 1'-0"

AHO ARCHITECTS, LLC
www.ahoarch.com

REGISTERED ARCHITECT TIMOTHY A. AHO 25347 STATE OF TEXAS
08/12/2026

Express Oil Change & Tire Engineers
Single Building / Right Hand Oil Change / Rear Enter / Side Tire Storage
Cross Roads, Texas (Aubrey)

FINAL

No.	Description	Date
IFP-0	Issue for permit	06/30/2026
IFB-0	Iss. for Bid / AHJ Rev.	08/12/2026

© 2026 Aho Architects, LLC.
All Rights Reserved.

Life Safety - Pit

Project number	26013
Date	06/30/2026
Drawn by	ARC
Checked by	N/A

LS103

Scale As indicated

9/1/2026 1:41:25 PM

NOTE:

THIS PLAN IS TO SHOW THE BUILDING AS IT RELATES TO THE SITE. A COMPLETE SET OF CIVIL DRAWINGS ARE TO BE SUBMITTED TO THE AHJ INDEPENDENT OF THIS SUBMITTAL. REFER TO THOSE DRAWINGS FOR ACTUAL INFORMATION.

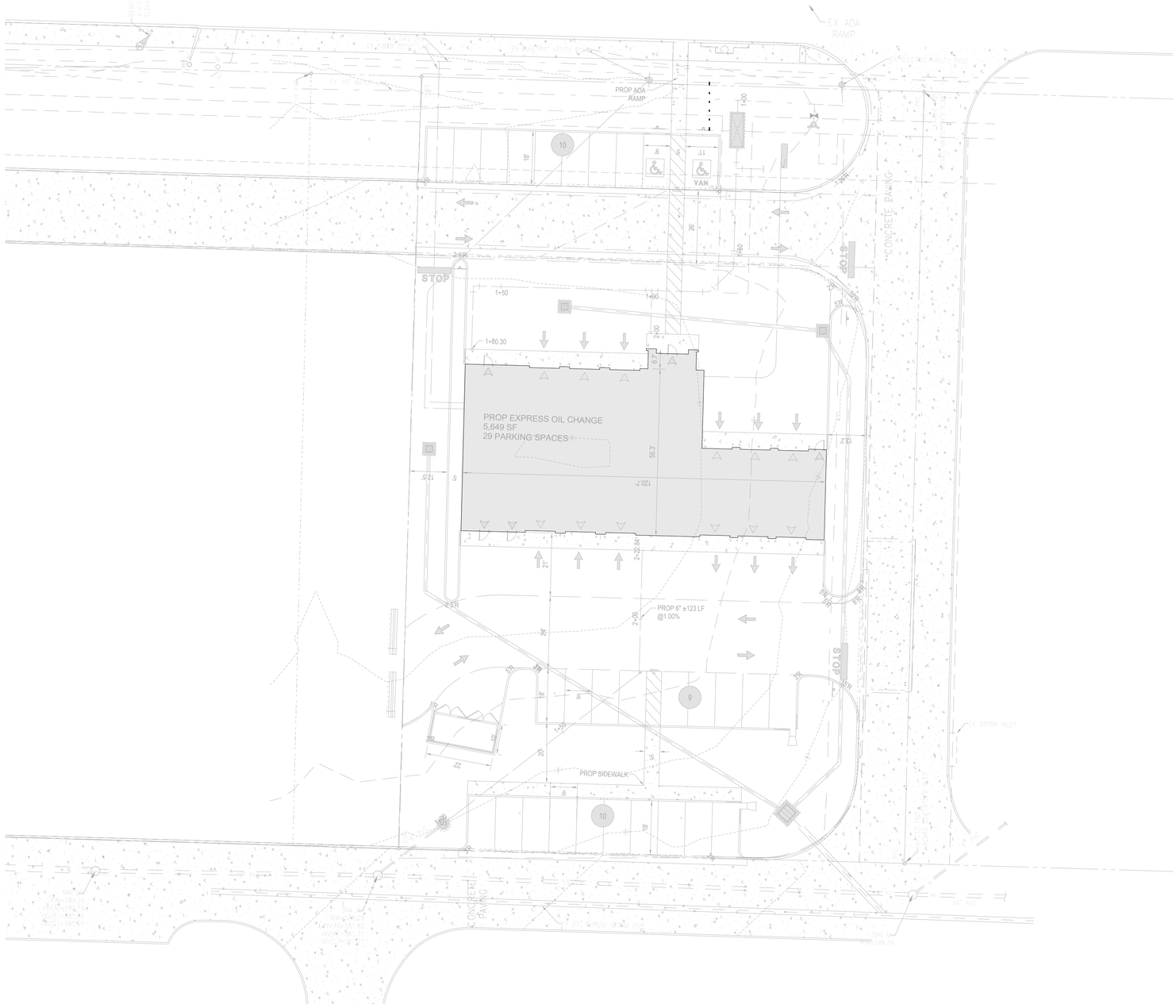

1 Site Plan
1" = 20'-0"

TRUE NORTH

PLAN NORTH

AHO ARCHITECTS, LLC

www.ahoarch.com

REGISTERED ARCHITECT
TIMOTHY A. AHO
25347
STATE OF TEXAS
08/12/2026

Express Oil Change & Tire Engineers

Single Building / Right Hand Oil Change / Rear Enter / Side Tire Storage

Cross Roads, Texas (Aubrey)

FINAL

No.	Description	Date
IFP-0	Issue for permit	06/30/2026
IFB-0	Iss. for Bid / AHJ Rev.	08/12/2026

© 2026 Aho Architects, LLC. All Rights Reserved.

Architectural Site Plan

Project number	26013
Date	06/30/2026
Drawn by	ARC
Checked by	N/A

AS100

Scale 1" = 20'-0"

9/1/2026 1:41:26 PM

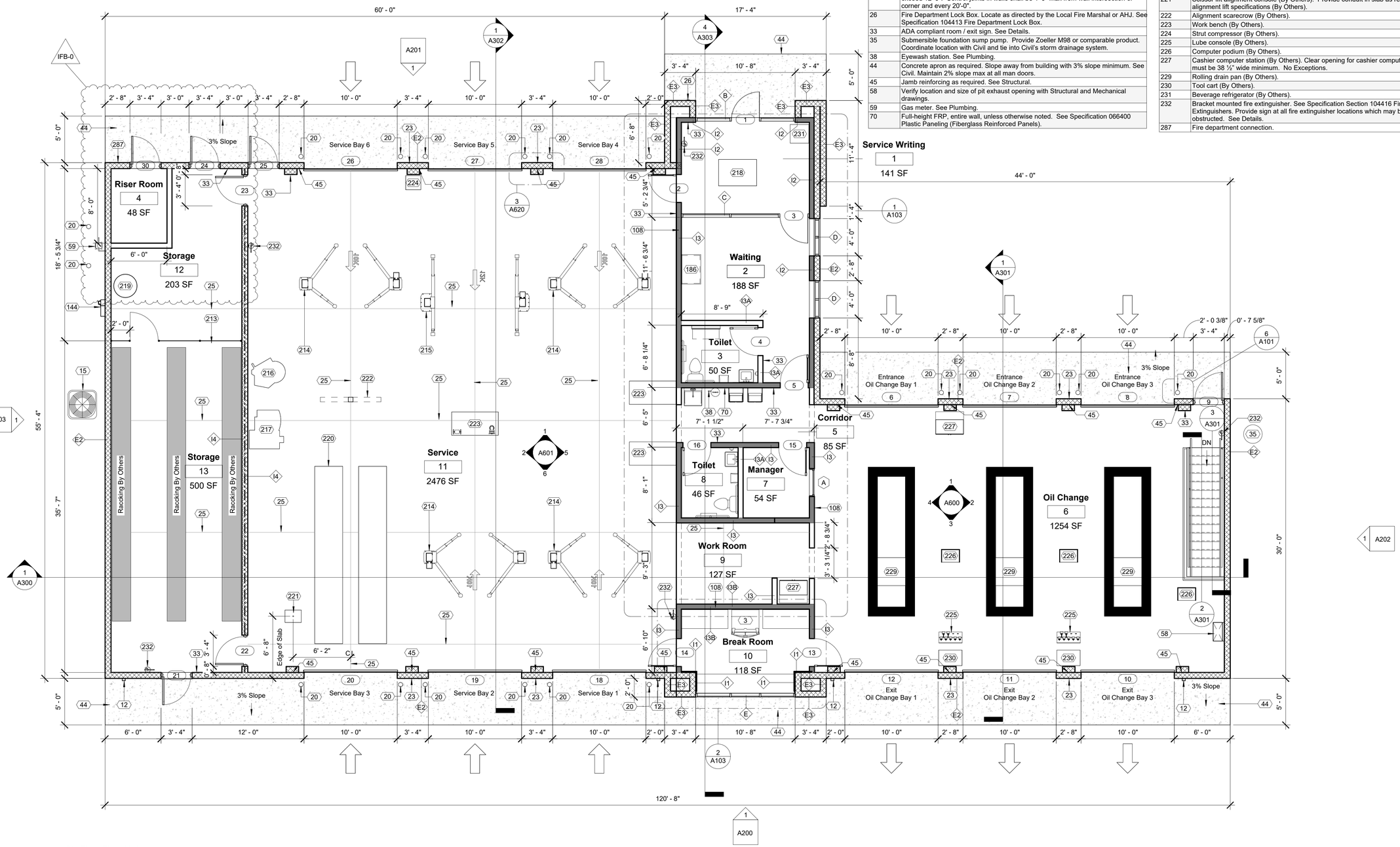

1 01_Floor Plan_Main
3/16" = 1'-0"

Keynote Schedule

Tag	Text
3	Location of 30" wide refrigerator (By Others).
12	Pre-finished metal conductor head with built-in overflow and downspout. Drainage to discharge on grade, unless indicated on drawings that drainage is to be piped to storm, (See Civil). Provide a pre-finished elbow and concrete splash block. See Specification 077100 Roof Specialties.
15	HVAC condensing unit. See Mechanical.
20	4" diameter painted concrete-filled steel pipe bollard. Color as indicated on Finish Schedule. Paint embedded portion of bollard. Use primer and two finish coats. See Details. See Specification 055000 Metal Fabrications.
23	Wall sconce (By Others). See Electrical. Locate junction box for sconces 5'-0" a.f.f. vertically and 4" from center horizontally. Verify with sign company prior to rough-in.
25	Control joint. For control joints in concrete floor slabs, coordinate location with equipment layout by others. Max. distance between control joints in slabs not to exceed 12'-0". Control joints in walls shall be 4'-0" max from wall intersection or corner and every 20'-0".
26	Fire Department Lock Box. Locate as directed by the Local Fire Marshal or AHJ. See Specification 104413 Fire Department Lock Box.
33	ADA compliant room / exit sign. See Details.
35	Submersible foundation sump pump. Provide Zoeller M98 or comparable product. Coordinate location with Civil and tie into Civil's storm drainage system.
38	Eyewash station. See Plumbing.
44	Concrete apron as required. Slope away from building with 3% slope minimum. See Civil. Maintain 2% slope max at all man doors.
45	Jamb reinforcing as required. See Structural.
58	Verify location and size of pit exhaust opening with Structural and Mechanical drawings.
59	Gas meter. See Plumbing.
70	Full-height FRP, entire wall, unless otherwise noted. See Specification 066400 Plastic Paneling (Fiberglass Reinforced Panels).

Keynote Schedule

Tag	Text
108	Gray shading indicates these walls are the boundaries for the building thermal envelope assembly.
144	Electrical meter. See Electrical.
186	Coffee cabinet.
213	8-foot-high chain-link fence with 3'-0"x7'-0" gate. Fence poles to be surface mounted.
214	10K Lift (By Others).
215	12K Lift (By Others).
216	Tire changer (By Others).
217	Wheel balancer (By Others).
218	Service Writing Desk.
219	Air compressor (By Others).
220	Scissor lift alignment (By Others).
221	Scissor lift alignment console (By Others). Provide conduit in slab as required. See alignment lift specifications (By Others).
222	Alignment scarecrow (By Others).
223	Work bench (By Others).
224	Strut compressor (By Others).
225	Lube console (By Others).
226	Computer podium (By Others).
227	Cashier computer station (By Others). Clear opening for cashier computer station must be 38 ½" wide minimum. No Exceptions.
229	Rolling drain pan (By Others).
230	Tool cart (By Others).
231	Beverage refrigerator (By Others).
232	Bracket mounted fire extinguisher. See Specification Section 104416 Fire Extinguishers. Provide sign at all fire extinguisher locations which may be visually obstructed. See Details.
287	Fire department connection.

AHO ARCHITECTS, LLC
www.ahoarch.com

REGISTERED ARCHITECT TIMOTHY A. AHO 25347 STATE OF TEXAS
08/12/2026

Express Oil Change & Tire Engineers

Single Building / Right Hand Oil Change / Rear Enter / Side Tire Storage

Cross Roads, Texas (Aubrey)

FINAL

No.	Description	Date
IFP-0	Issue for permit	06/30/2026
IFB-0	Iss. for Bid / AHJ Rev.	08/12/2026

© 2026 Aho Architects, LLC. All Rights Reserved.

Floor Plan - Main

Project number	26013
Date	06/30/2026
Drawn by	ARC
Checked by	N/A

A100

Scale 3/16" = 1'-0"

9/1/2026 1:41:30 PM

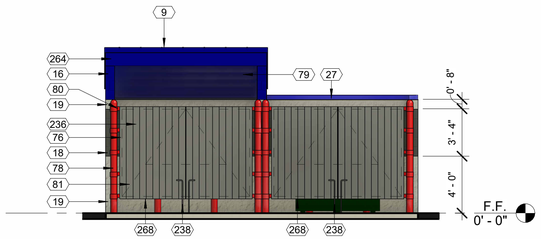

1 05_Dumpster Elevation_A
3/16" = 1'-0"

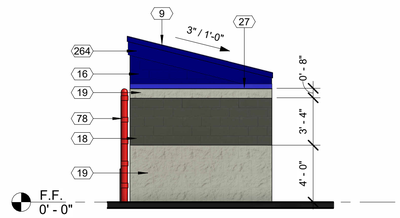

2 07_Dumpster Elevation_C
3/16" = 1'-0"

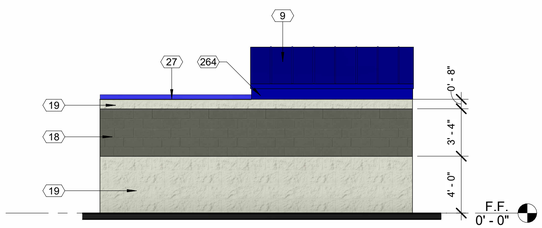

3 06_Dumpster Elevation_B
3/16" = 1'-0"

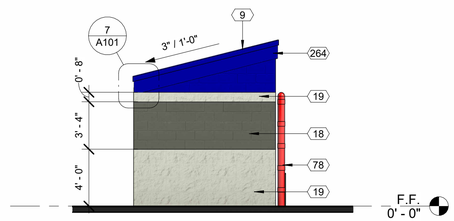

4 08_Dumpster Elevation_D
3/16" = 1'-0"

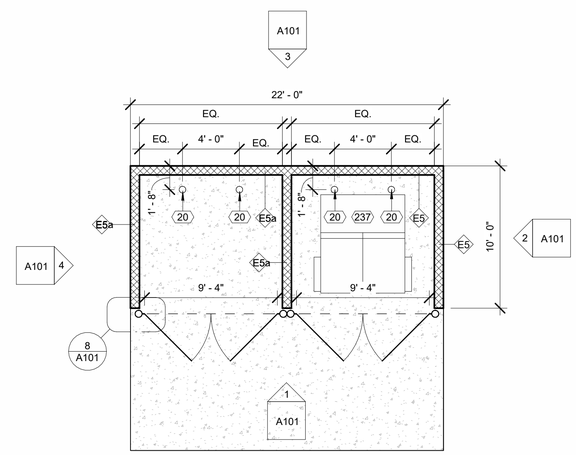

5 02_Floor Plan_Dumpster
3/16" = 1'-0"

Keynote Schedule

Tag	Text
9	Pre-finished standing seam metal roof system. See Specification 074113.16 Standing Seam Metal Roof Panels. See Finish Schedule for color.
16	Painted smooth-face CMU. See Specification 042200 Concrete Unit Masonry. Color as indicated on Finish Schedule.
18	Painted smooth-face CMU. See Specification 042200 Concrete Unit Masonry. Color as indicated on Finish Schedule.
19	Painted split-face CMU (bond beam where indicated; see Structural). See Specification 042200 Concrete Unit Masonry. Color as indicated on Finish Schedule. Project 1/2" where indicated on details.
20	4" diameter painted concrete-filled steel pipe bollard. Color as indicated on Finish Schedule. Paint embedded portion of bollard. Use primer and two finish coats. See Details. See Specification 055000 Metal Fabrications.
27	Pre-finished metal coping at exposed tops only over self-adhered membrane flashing and pressure treated wood blocking. Slope to drain. Color as indicated on Finish Schedule.
34	4" perforated perimeter drain with silt filtration fabric. See Details.
35	Submersible foundation sump pump. Provide Zoeller M98 or comparable product. Coordinate location with Civil and tie into Civil's storm drainage system.
38	Eyewash station. See Plumbing.
46	Oil tank stairs (By Others).
58	Verify location and size of pit exhaust opening with Structural and Mechanical drawings.
72	Painted concrete cap for pipe bollard. Color as indicated on Finish Schedule.
73	1/2" diameter x 4" long metal studs. Provide a total of 4.
74	1/2" expansion joint with backer rod and sealant.
75	1/4" x 6" painted steel bracket with continuous fillet weld to painted steel collar hinge and frame. Color as indicated on Finish Schedule.
76	2" x 2" x 1/4" painted steel gate frame with welded connections. Color as indicated on Finish Schedule.
78	6" diameter painted steel dumpster post. Color as indicated on Finish Schedule.
79	Wrap front face and underside of dumpster roof joists with prefinished metal panels (on 5/8" PT plywood) to match standing seam metal roof. Install and fasten prefinished metal panels per manufacturer's written standards to ensure a weathertight construction.
80	Hinge collar with grease fitting. Collar welded all around to post. Typical.
81	2" x 2" x 1/4" painted steel cross bracing with horizontal bracing in thirds (beyond). Color as indicated on Finish Schedule.
127	2x pressure treated wood nailer.
130	2 layers of #15 roofing felt.
131	5/8" pressure treated plywood decking. See Structural.
223	Work bench (By Others).
232	Bracket mounted fire extinguisher. See Specification Section 104416 Fire Extinguishers. Provide sign at all fire extinguisher locations which may be visually obstructed. See Details.
233	275-gallon Class IIIB new oil tank (By Others).
234	928-gallon Class IIIB new oil tank (By Others). Provide a 2" concrete walkway cap with non-slip surface over (oil tank By Others). Coordinate with equipment supplier prior to installation.
235	928-gallon Class IIIB waste oil tank (By Others). Provide a 2" concrete walkway cap with non-slip surface over (oil tank By Others). Coordinate with equipment supplier prior to installation.
236	1x6 painted Trex slats secured to frame. See Finish Schedule for color.
237	Dumpster (By Others).
238	Cane bolts with stops.
255	2x pressure treated wood blocking. Use barrier to prevent corrosion between wood and metal.
264	Prefinished metal fascia / trim, with hemmed drip edge, to match standing seam metal roof.
268	Hold bottom of gate above grade as necessary to clear adjacent curb height to ensure gates can swing 180 degrees. Coordinate with Civil drawings for clearance needed.
281	2x P.T. joists. See Structural.

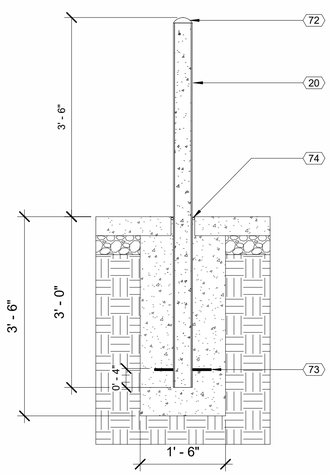

6 DT_Sheet A101_Bollard Detail
3/4" = 1'-0"

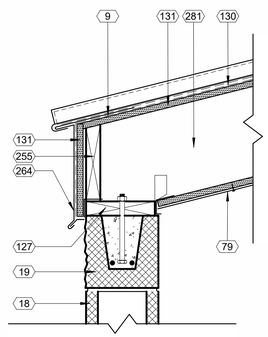

7 Roof Trim Detail
1 1/2" = 1'-0"

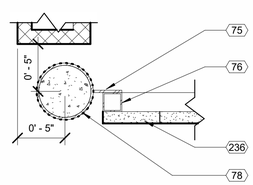

8 DT_Sheet A101_Dumpster Detail @ Gate
1 1/2" = 1'-0"

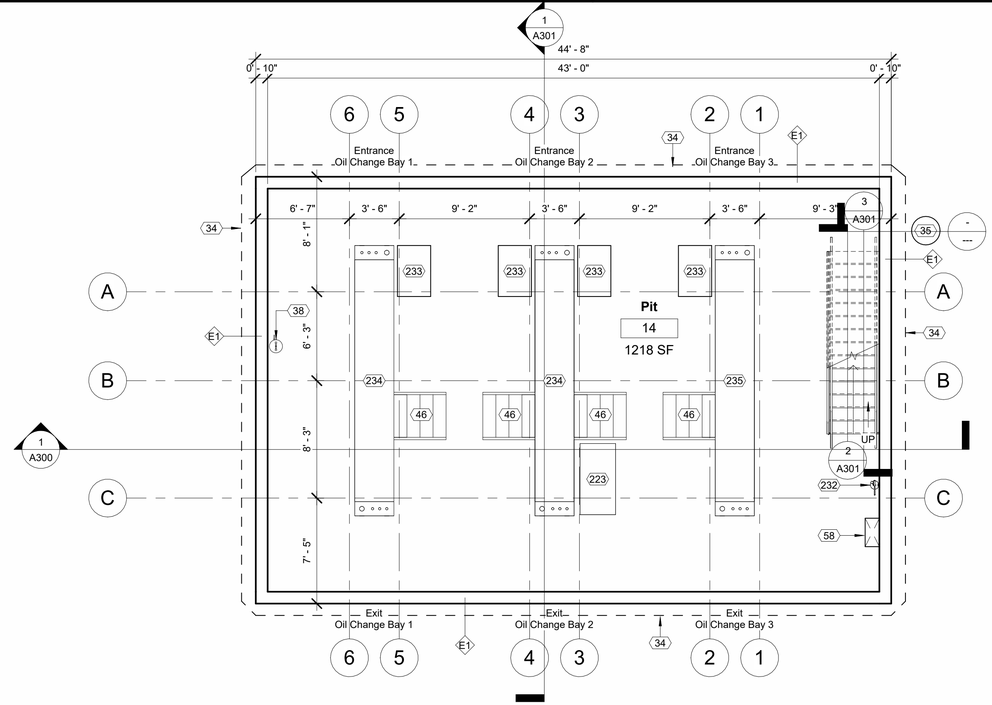

9 00_Floor Plan_Pit
3/16" = 1'-0"

AHO ARCHITECTS, LLC
www.ahoarch.com

REGISTERED ARCHITECT
TIMOTHY A. AHO
25347
STATE OF TEXAS
08/12/2026

Express Oil Change & Tire Engineers

Single Building / Right Hand Oil Change / Rear Enter / Side Tire Storage

Cross Roads, Texas (Aubrey)

FINAL

No.	Description	Date
IFP-0	Issue for permit	06/30/2026
IFB-0	Iss. for Bid / AHJ Rev.	08/12/2026

© 2026 Aho Architects, LLC. All Rights Reserved.

Pit Floor Plan and Site Details

Project number	26013
Date	06/30/2026
Drawn by	ARC
Checked by	N/A

A101

Scale As indicated

9/1/2026 1:41:38 PM

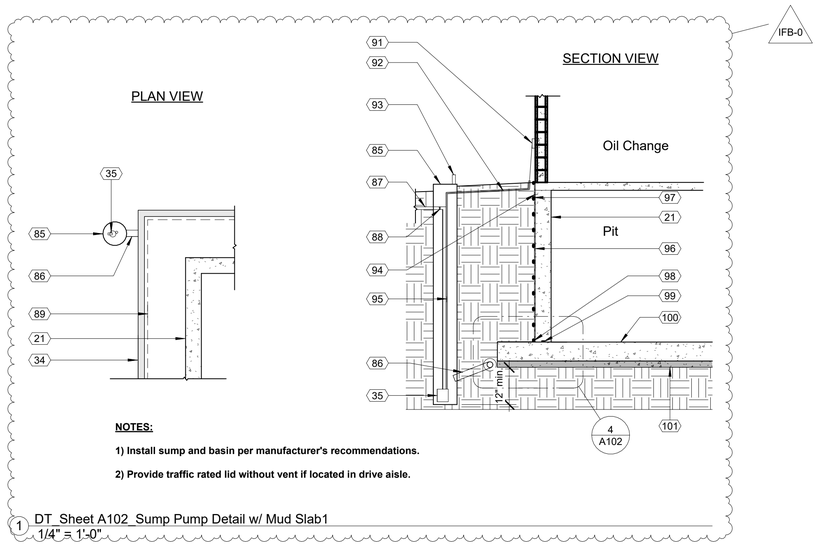

NOTES:

1) Install sump and basin per manufacturer's recommendations.

2) Provide traffic rated lid without vent if located in drive aisle.

1 DT_Sheet A102_Sump Pump Detail w/ Mud Slab1
1/4" = 1'-0"

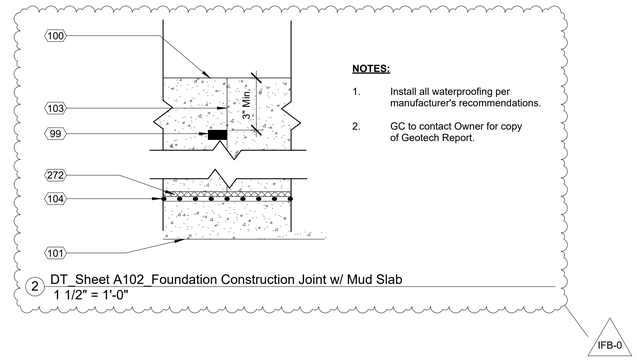

NOTES:

1. Install all waterproofing per manufacturer's recommendations.
2. GC to contact Owner for copy of Geotech Report.

2 DT_Sheet A102_Foundation Construction Joint w/ Mud Slab
1 1/2" = 1'-0"

Keynote Schedule

Tag	Text
21	Cast-in-place concrete wall. See Structural. Membrane waterproofing at perimeter of foundation wall as specified. See Specification 334600 Subdrainage.
34	4" perforated perimeter drain with silt filtration fabric. See Details.
35	Submersible foundation sump pump. Provide Zoeller M98 or comparable product. Coordinate location with Civil and tie into Civil's storm drainage system.
85	18" diameter black corrugated pipe with inlet fittings and solid heavy duty corrugated locking pipe cover set in concrete with power grommet, or Nyloplast drain basin with inlet fittings and lockable cover and power grommet. Contractor's Option. Set pipe in concrete 2'x2'x1'. Embed pipe 6" into concrete.
86	4" discharge pipe to sump pump.
87	2" discharge pipe from sump pump to storm drainage system. Coordinate with Civil.
88	Install union at serviceable depth.
89	Concrete foundation. See Structural.
91	Provide power for sump pump. See Electrical.
92	Power cord for sump pump to be run in conduit from outlet to sump below grade.
93	2" – 3" vent pipe
94	Fasteners at 12" max o.c. for securing subdrainage to pit wall. Follow manufacturer's installation instructions.
95	Pull rope or wire for submersible sump pump.
96	CCW MiraClay woven geotextile against wall/slab.
97	CCW MiraDrain 6200.
98	CCW MiraClay granules or CCW MiraClay mastic.
99	CCW MiraStop 8W.
100	Concrete slab. See Structural.
101	4" mud slab if required. See Structural.
103	Construction joint.
104	CCW MiraDrain 9800.
105	3" washed #57 stone wrapped in silt filtration fabric.
107	CCW MiraClay 12" Reinforcing Angle Strip at all outside corners.
245	Lockable cover @ sump pump.
272	CCW MiraClay non-woven geotextile side up.

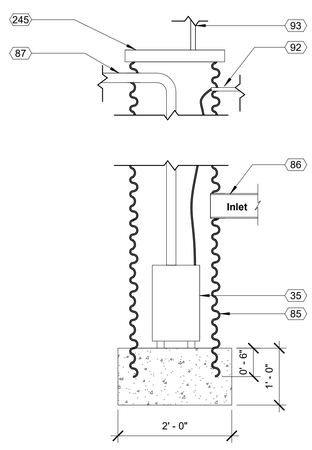

3 DT_Sheet A102_Sump Pump Section
3/4" = 1'-0"

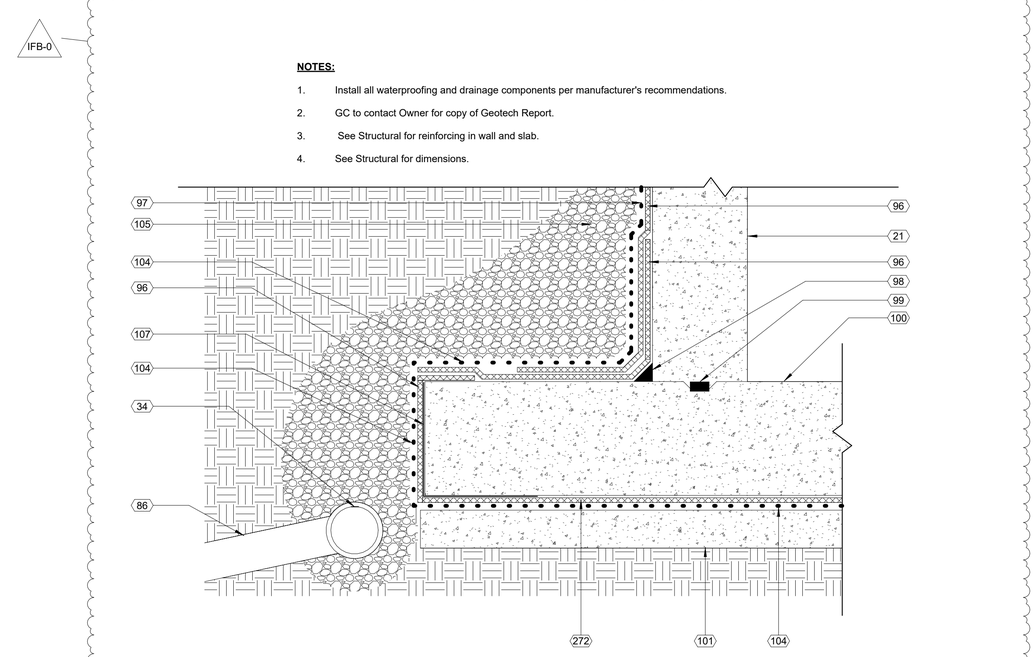

NOTES:

1. Install all waterproofing and drainage components per manufacturer's recommendations.
2. GC to contact Owner for copy of Geotech Report.
3. See Structural for reinforcing in wall and slab.
4. See Structural for dimensions.

4 DT_Sheet A102_Foundation Waterproofing with Gravel Fill w/ Mud Slab1
1 1/2" = 1'-0"

AHO ARCHITECTS, LLC

www.ahoarch.com

REGISTERED ARCHITECT TIMOTHY A. AHO 25347 STATE OF TEXAS
08/12/2026

Express Oil Change & Tire Engineers

Single Building / Right Hand Oil Change / Rear Enter / Side Tire Storage

Cross Roads, Texas (Aubrey)

FINAL

No.	Description	Date
IFP-0	Issue for permit	06/30/2026
IFB-0	Iss. for Bid / AHJ Rev.	08/12/2026

© 2026 Aho Architects, LLC.
All Rights Reserved.

Foundation Details

Project number	26013
Date	06/30/2026
Drawn by	ARC
Checked by	N/A

A102

Scale As indicated

9/1/2026 1:41:39 PM

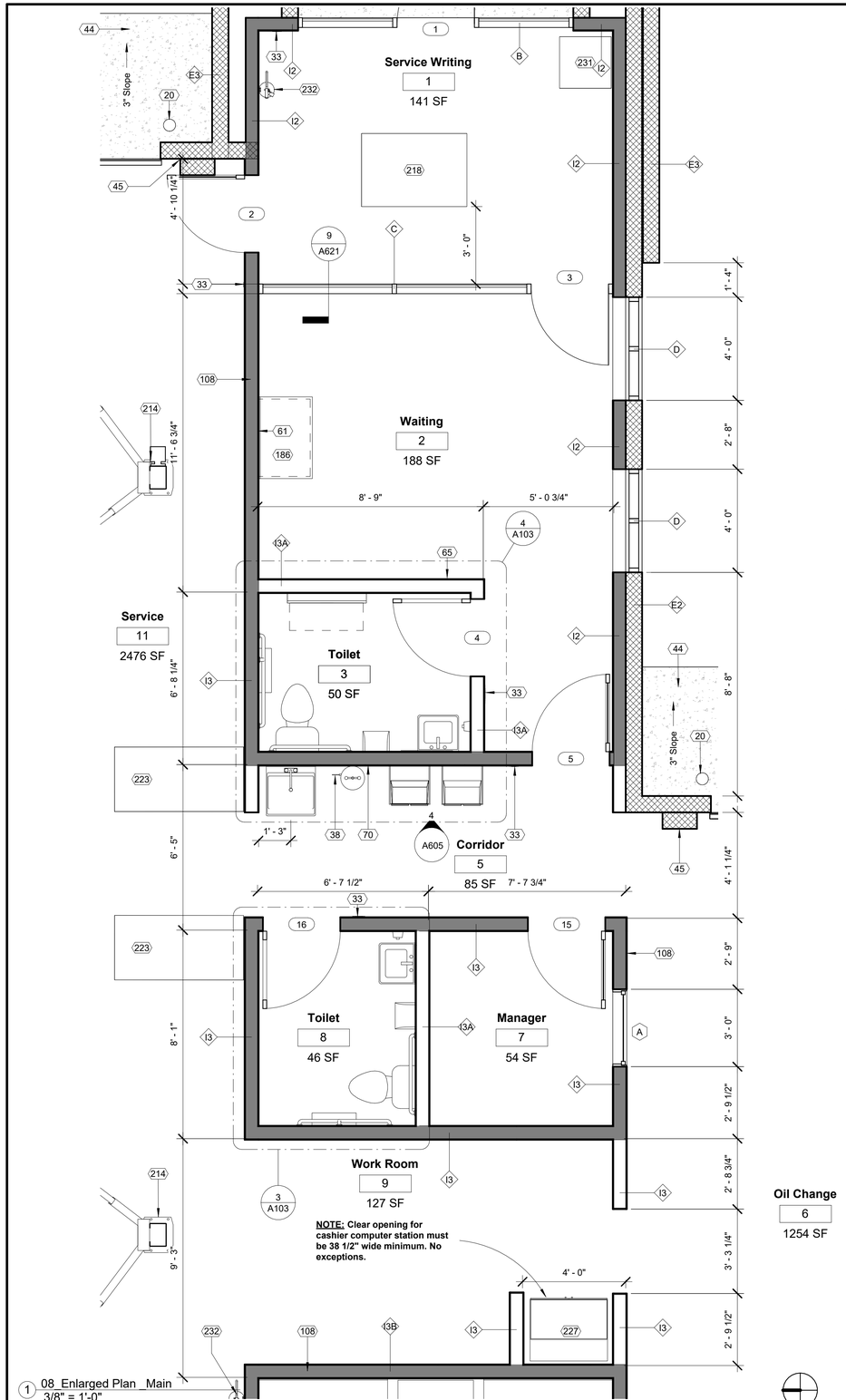

1 08_Enlarged Plan _Main
3/8" = 1'-0"

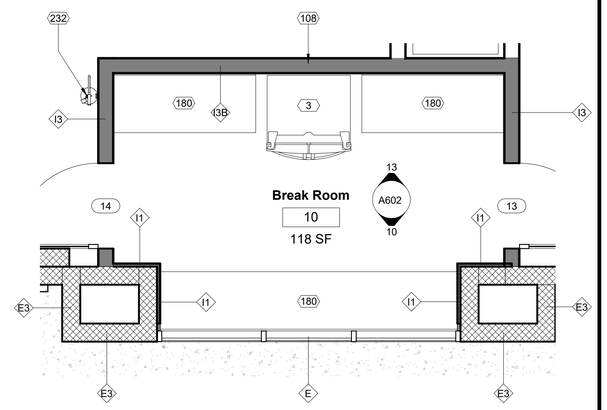

2 12_Enlarged Plan_Break Room 10
3/8" = 1'-0"

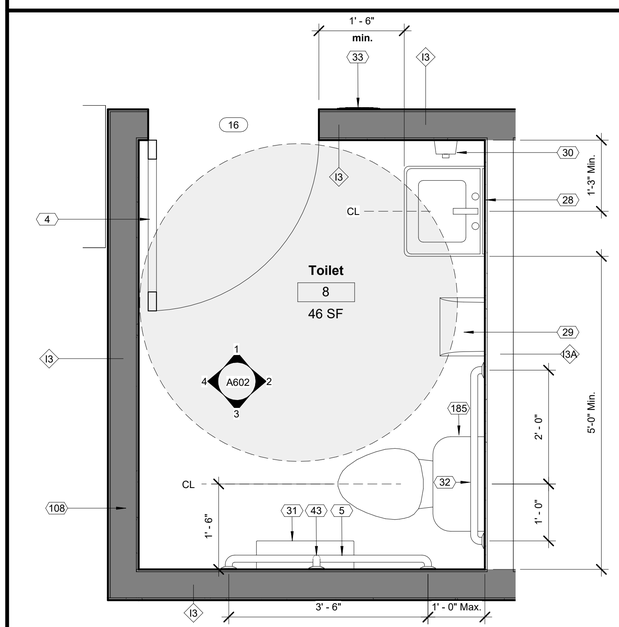

3 10_Enlarged Plan_Toilet 8
3/4" = 1'-0"

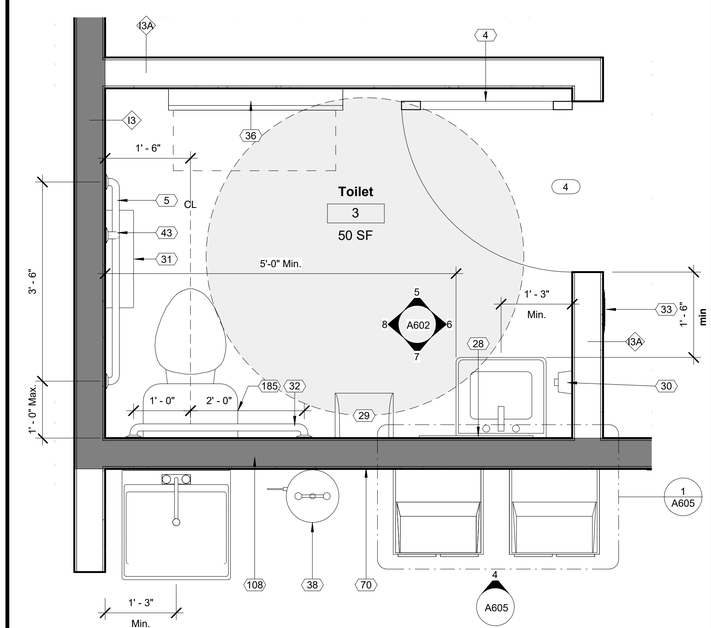

4 09_Enlarged Plan_Toilet 3
3/4" = 1'-0"

Keynote Schedule	
Tag	Text
3	Location of 30" wide refrigerator (By Others).
4	Robe hook mounted at 48" A.F.F. See Specification 102800 Toilet, Bath, and Laundry Accessories.
5	42" grab bar with blocking in walls as required. See Specification 102800 Toilet, Bath, and Laundry Accessories.
20	4" diameter painted concrete-filled steel pipe bollard. Color as indicated on Finish Schedule. Paint embedded portion of bollard. Use primer and two finish coats. See Details. See Specification 055000 Metal Fabrications.
28	Framed mirror. See Specification 102800 Toilet, Bath, and Laundry Accessories.
29	Automatic Towel Dispenser (By others). Provide blocking in wall as required. See Specification 102800 Toilet, Bath, and Laundry Accessories.
30	Wall mounted soap dispenser (By Others). Provide blocking in wall as required. See Specification 102800 Toilet, Bath, and Laundry Accessories.
31	Jumbo Dual Roll Toilet Tissue dispenser (By Others). Provide blocking in wall as required. See Specification 102800 Toilet, Bath, and Laundry Accessories.
32	36" grab bar with blocking in walls as required. See Specification 102800 Toilet, Bath, and Laundry Accessories.
33	ADA compliant room / exit sign. See Details.
36	Surface mounted baby changing station with blocking in walls as required. See Specification 102800 Toilet, Bath, and Laundry Accessories.
38	Eyewash station. See Plumbing.
43	24" vertical grab bar with blocking in walls as required. See Specification 102800 Toilet, Bath, and Laundry Accessories.
44	Concrete apron as required. Slope away from building with 3% slope minimum. See Civil. Maintain 2% slope max at all man doors.
45	Jamb reinforcing as required. See Structural.
61	Wall mounted T.V. by others. See Electrical.
65	Word Wall. Use extreme bond primer. Graphics (By Others).
70	Full-height FRP, entire wall, unless otherwise noted. See Specification 066400 Plastic Paneling (Fiberglass Reinforced Panels).
108	Gray shading indicates these walls are the boundaries for the building thermal envelope assembly.
180	Plastic laminate over 3/4" plywood. See Specification 123623.13 Plastic-Laminate-Clad Countertops. See Finish Schedule for color.
185	Flush valve on transfer side of water closet.
186	Coffee cabinet.
214	10K Lift (By Others).
218	Service Writing Desk.
223	Work bench (By Others).
227	Cashier computer station (By Others). Clear opening for cashier computer station must be 38 ½" wide minimum. No Exceptions.
231	Beverage refrigerator (By Others).
232	Bracket mounted fire extinguisher. See Specification Section 104416 Fire Extinguishers. Provide sign at all fire extinguisher locations which may be visually obstructed. See Details.

AHO ARCHITECTS, LLC
www.ahoarch.com
REGISTERED ARCHITECT TIMOTHY A. AHO 25347 STATE OF TEXAS
08/12/2026

Express Oil Change & Tire Engineers

Single Building / Right Hand Oil Change / Rear Enter / Side Tire Storage

Cross Roads, Texas (Aubrey)

FINAL

No.	Description	Date
	CL	
IFP-0	Issue for permit	06/30/2026
IFB-0	Iss. for Bid / AHJ Rev.	08/12/2026

© 2026 Aho Architects, LLC. All Rights Reserved.

Enlarged Floor Plans and Details

Project number	26013
Date	06/30/2026
Drawn by	ARC
Checked by	N/A

A103

Scale As indicated

9/1/2026 1:41:42 PM

Note: Bar Joists are not shown for clarity

Keynote Schedule	
Tag	Text
1	Wall Pack / Electrical Fixture. See Electrical.
6	Lay-in acoustical ceiling tile and grid, supported from structure.
7	Painted 1/2" gypsum board ceiling secured to structure above. 5/8" Type X where indicated. See Details for # of layers.
8	Exposed to structure above.
11	Pre-finished metal canopy. See Details.
12	Pre-finished metal conductor head with built-in overflow and downspout. Drainage to discharge on grade, unless indicated on drawings that drainage is to be piped to storm. (See Civil). Provide a pre-finished elbow and concrete splash block. See Specification 077100 Roof Specialties.
12a	Emergency roof drain scupper. Locate adjacent to conductor head and 2 inches higher than downspout scupper location. See Specification 077100 Roof Specialties.
51	Attic access ladder.
58	Verify location and size of pit exhaust opening with Structural and Mechanical drawings.
108	Gray shading indicates these walls are the boundaries for the building thermal envelope assembly.
114	Contractor to ensure overhead door, track, etc. meets the minimum vertical clearance required for equipment (By Others). Typical.
115	Dashed line indicates extent of overhead doors. Typical.
116	See Engineering drawings for Mechanical/Electrical/Plumbing fixtures and equipment. Typical.
228	Convex mirrors (By Others).

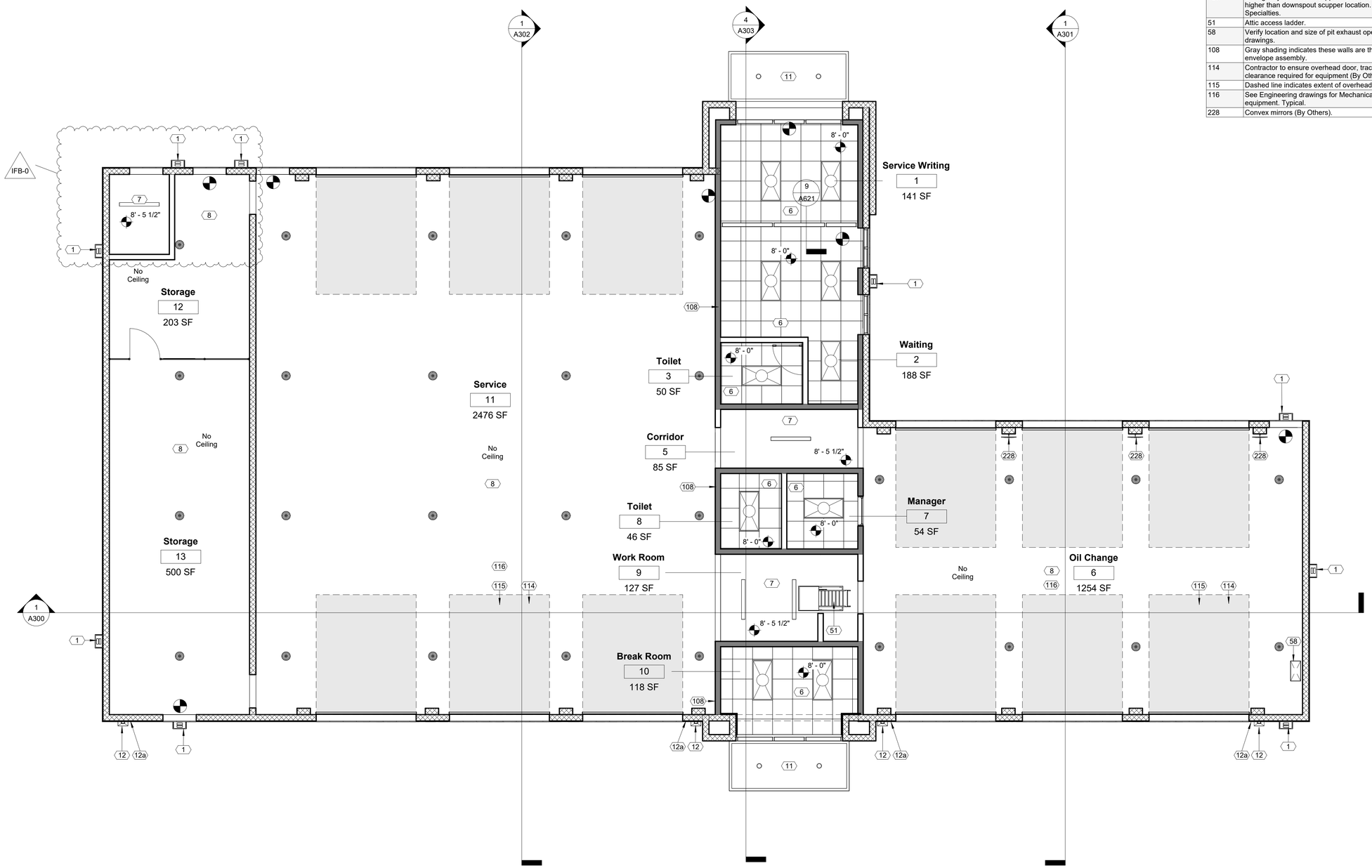

1 01_RCP_Main
3/16" = 1'-0"

AHO ARCHITECTS, LLC
www.ahoarch.com

REGISTERED ARCHITECT TIMOTHY A. AHO 25347 STATE OF TEXAS
08/12/2026

Express Oil Change & Tire Engineers

Single Building / Right Hand Oil Change / Rear Enter / Side Tire Storage

Cross Roads, Texas (Aubrey)

FINAL

No.	Description	Date
IFP-0	Issue for permit	06/30/2026
IFB-0	Iss. for Bid / AHJ Rev.	08/12/2026

© 2026 Aho Architects, LLC. All Rights Reserved.

Reflected Ceiling Plan - Main

Project number	26013
Date	06/30/2026
Drawn by	ARC
Checked by	N/A

A104

Scale 3/16" = 1'-0"

9/1/2026 1:41:43 PM

Keynote Schedule	
Tag	Text
8	Exposed to structure above.
58	Verify location and size of pit exhaust opening with Structural and Mechanical drawings.
116	See Engineering drawings for Mechanical/Electrical/Plumbing fixtures and equipment. Typical.

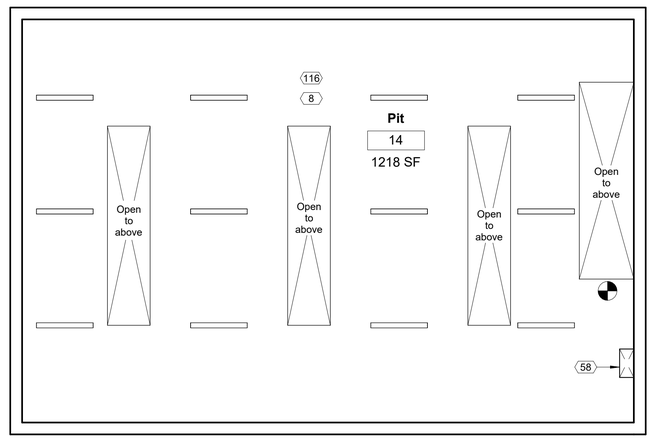

1 00_RCP_Pit
3/16" = 1'-0"

AHO ARCHITECTS, LLC
www.ahoarch.com

REGISTERED ARCHITECT
TIMOTHY A. AHO
25347
STATE OF TEXAS
08/12/2026

Express Oil Change & Tire Engineers

Single Building / Right Hand Oil Change / Rear Enter / Side Tire Storage

Cross Roads, Texas (Aubrey)

FINAL

No.	Description	Date
IFP-0	Issue for permit	06/30/2026
IFB-0	Iss. for Bid / AHJ Rev.	08/12/2026

© 2026 Aho Architects, LLC.
All Rights Reserved.

Reflected Ceiling Plan - Pit

Project number	26013
Date	06/30/2026
Drawn by	ARC
Checked by	N/A

A105

Scale 3/16" = 1'-0"

9/1/2026 1:41:44 PM

Keynote Schedule	
Tag	Text
6	Lay-in acoustical ceiling tile and grid, supported from structure.
66	Interior wall mounted ladder. See Details. See Specification 055133 Ladders. Color as indicated on Finish Schedule.
108	Gray shading indicates these walls are the boundaries for the building thermal envelope assembly.
126	Unfaced R-38 batt insulation. See Specification 072100 Thermal Insulation.
132	2x wood framing @ 16" o.c. with kraft face R-38 batt insulation in between. Kraft face in contact with substrate.
141	3/4" tongue and groove plywood on 2x10 wood joists @ 12" o.c. Provide R-38 batt kraft face insulation in between joists. Kraft face in contact with substrate. (If applicable, it shall be the Contractor's option to provide plywood attached to bottom of joists for insulation to rest on or secure insulation to joists without the need for the plywood bottom).

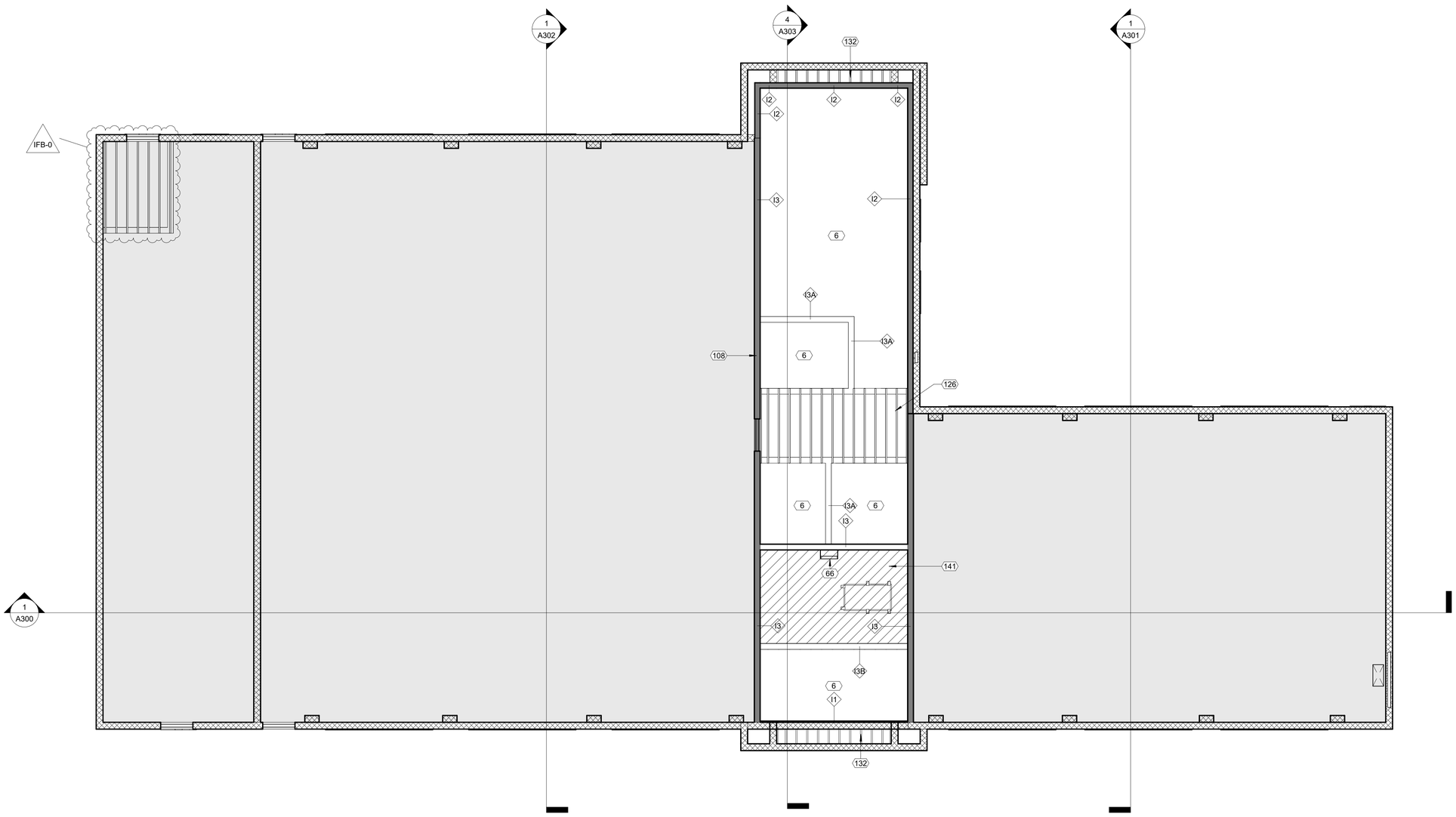

1 11_Floor Plan_Platform
3/16" = 1'-0"

AHO ARCHITECTS, LLC
www.ahoarch.com

REGISTERED ARCHITECT
TIMOTHY A. AHO
25347
STATE OF TEXAS
08/12/2026

Express Oil Change & Tire Engineers

Single Building / Right Hand Oil Change / Rear Enter / Side Tire Storage

Cross Roads, Texas (Aubrey)

FINAL

No.	Description	Date
IFP-0	Issue for permit	06/30/2026
IFB-0	Iss. for Bid / AHJ Rev.	08/12/2026

© 2026 Aho Architects, LLC.
All Rights Reserved.

Floor Plan - Platform

Project number	26013
Date	06/30/2026
Drawn by	ARC
Checked by	N/A

A106

Scale 3/16" = 1'-0"

9/1/2026 1:41:44 PM

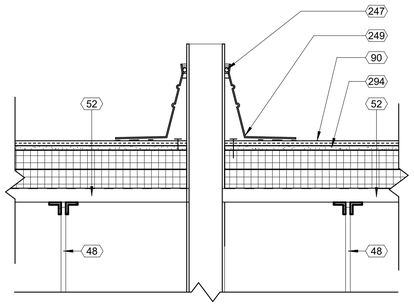

2 DT_Sheet A107_TPO Roof Penetration Detail
1 1/2" = 1'-0"

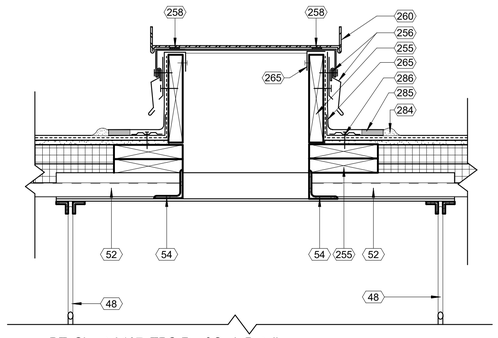

3 DT_Sheet A107_TPO Roof Curb Detail
1 1/2" = 1'-0"

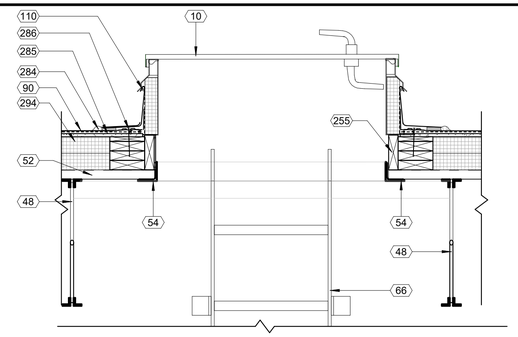

4 DT_Sheet A107_Roof Hatch Detail - Parallel to Roof Joists
1" = 1'-0"

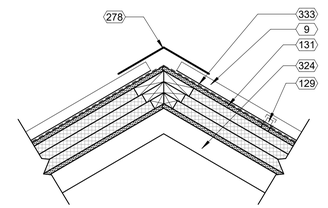

5 Draft Template_Typical Ridge-Hip Detail
1" = 1'-0"

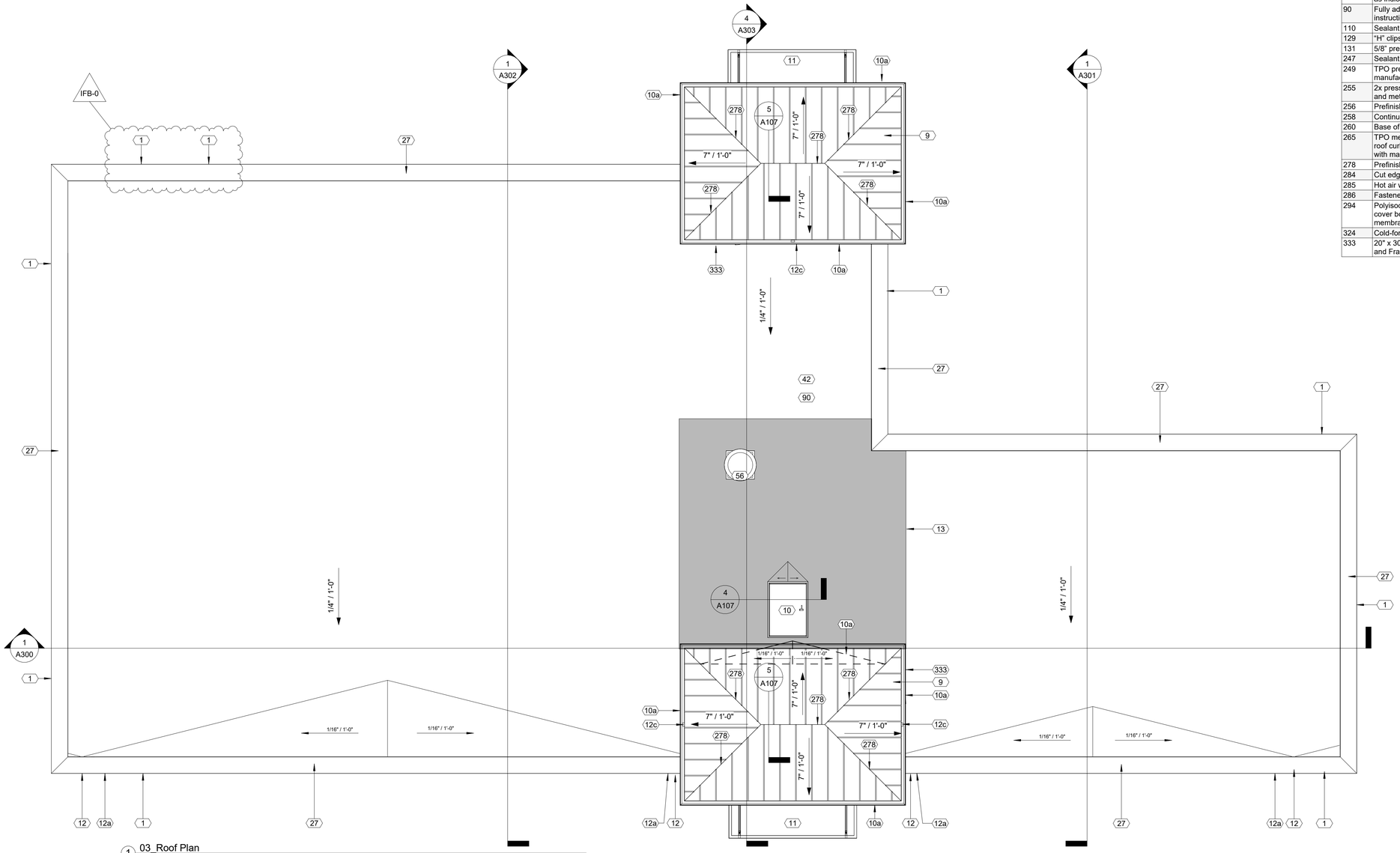

1 03_Roof Plan
3/16" = 1'-0"

Keynote Schedule

Tag	Text
1	Wall Pack / Electrical Fixture. See Electrical.
9	Pre-finished standing seam metal roof system. See Specification 074113.16 Standing Seam Metal Roof Panels. See Finish Schedule for color.
10	Roof hatch. See Specification 077233 Roof Hatches.
10a	Prefinished metal gutter. Match SSMR color.
11	Pre-finished metal canopy. See Details.
12	Pre-finished metal conductor head with built-in overflow and downspout. Drainage to discharge on grade, unless indicated on drawings that drainage is to be piped to storm. (See Civil). Provide a pre-finished elbow and concrete splash block. See Specification 077100 Roof Specialties.
12a	Emergency roof drain scupper. Locate adjacent to conductor head and 2 inches higher than downspout scupper location. See Specification 077100 Roof Specialties.
12c	Prefinished metal downspout. Match SSMR color. Discharge on TPO roof below.
13	Walk pad, see Specification 075423 TPO Roof.
27	Pre-finished metal coping at exposed tops only over self-adhered membrane flashing and pressure treated wood blocking. Slope to drain. Color as indicated on Finish Schedule.
42	Paint all roof penetrations to match roof color.
48	Bar joist. See Structural.
52	Galvanized metal roof deck. See Structural.
54	Steel angle. See Structural.
56	Metal louver or vent. Color to match adjacent surface. See Mechanical.
66	Interior wall mounted ladder. See Details. See Specification 055133 Ladders. Color as indicated on Finish Schedule.
90	Fully adhered TPO membrane roofing installed per manufacturer's written instructions. See Specification 075423 Thermoplastic Polyolefin (TPO) Roofing.
110	Sealant with backer rod.
129	"H" clips at mid-span on standing seam metal roof.
131	5/8" pressure treated plywood decking. See Structural.
247	Sealant compatible with water block sealant.
249	TPO pre-molded vent boot with pre-manufactured TPO membrane flashing by TPO manufacturer.
255	2x pressure treated wood blocking. Use barrier to prevent corrosion between wood and metal.
256	Prefinished metal flashing and counterflashing.
258	Continuous sealant around perimeter.
260	Base of equipment to extend 1/2" minimum beyond and down over top of roof curb.
265	TPO membrane turned vertically up the wall and fastened to wood blocking at top roof curb, or top of wall framing per detail. Adhere TPO membrane to wall substrate with manufacturer approved bonding adhesive.
278	Prefinished metal ridge/hip cap by metal roofing manufacturer.
284	Cut edge sealant at TPO roof membrane flashing.
285	Hot air weld at TPO membrane and membrane flashing.
286	Fastener and seam fastening plate.
294	Polyisocyanurate insulation board (See TPO Spec for required R-value). Provide ½" cover board, mechanically fastened, over the top of insulation in locations where membrane roofing is to be applied.
324	Cold-formed metal stud trusses, see Structural.
333	20" x 30" Exterior attic access door, see Specification Section 083113 Access Doors and Frames.

AHO ARCHITECTS, LLC
www.ahoarch.com

REGISTERED ARCHITECT
TIMOTHY A. AHO
25347
STATE OF TEXAS
08/12/2026

Express Oil Change & Tire Engineers

Single Building / Right Hand Oil Change / Rear Enter / Side Tire Storage

Cross Roads, Texas (Aubrey)

FINAL

No.	Description	Date
IFP-0	Issue for permit	06/30/2026
IFB-0	Iss. for Bid / AHJ Rev.	08/12/2026

© 2026 Aho Architects, LLC.
All Rights Reserved.

Roof Plan

Project number	26013
Date	06/30/2026
Drawn by	ARC
Checked by	N/A

A107

Scale As indicated

9/1/2026 1:41:46 PM

EXTERIOR FINISH MATERIAL LEGEND

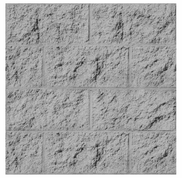

PAINTED SPLIT-FACE CMU

Color: SW7669 Summit Gray
Manuf: Sherwin Williams
Keynote: 19

PAINTED SMOOTH-FACE CMU

Color: SW6966 Blueblood
Manuf: Sherwin Williams
Keynote: 16

PAINTED SMOOTH-FACE CMU

Color: SW7075 Web Gray
Manuf: Sherwin Williams
Keynote: 18

HM DOORS

Color: SW7669 Summit Gray
Manuf: Sherwin Williams

STOREFRONT DOORS/WINDOWS

Color: Clear Anodized Aluminum
Manuf: YKK

BOLLARDS

Color: Safety Red
Manuf: Sherwin Williams

STANDING SEAM METAL ROOF

Color: Royal Blue
Manuf: Berridge

CONDUCTOR HEADS / DOWNSPOUTS

Color: Match SW7075 Web Gray
Manuf: Sherwin Williams

OVERHEAD DOORS

Color: White
Manuf: Overhead Door Company

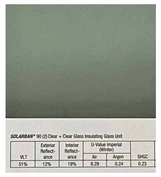

TINTED GLAZING

Color: Solarban 90 on Clear
Manuf: Vitro Architectural Glass

EIFS CORNICE & TRIM

Color: SW6966 Blueblood
Manuf: Sherwin Williams
Keynote: 318

Keynote Schedule

Tag	Text
1	Wall Pack / Electrical Fixture. See Electrical.
9	Pre-finished standing seam metal roof system. See Specification 074113.16 Standing Seam Metal Roof Panels. See Finish Schedule for color.
10a	Prefinished metal gutter. Match SSMR color.
11	Pre-finished metal canopy. See Details.
12	Pre-finished metal conductor head with built-in overflow and downspout. Drainage to discharge on grade, unless indicated on drawings that drainage is to be piped to storm. (See Civil). Provide a pre-finished elbow and concrete splash block. See Specification 077100 Roof Specialties.
12a	Emergency roof drain scupper. Locate adjacent to conductor head and 2 inches higher than downspout scupper location. See Specification 077100 Roof Specialties.
12c	Prefinished metal downspout. Match SSMR color. Discharge on TPO roof below.
15	HVAC condensing unit. See Mechanical.
16	Painted smooth-face CMU. See Specification 042200 Concrete Unit Masonry. Color as indicated on Finish Schedule.
18	Painted smooth-face CMU. See Specification 042200 Concrete Unit Masonry. Color as indicated on Finish Schedule.
19	Painted split-face CMU (bond beam where indicated; see Structural). See Specification 042200 Concrete Unit Masonry. Color as indicated on Finish Schedule. Project 1/2" where indicated on details.
20	4" diameter painted concrete-filled steel pipe bollard. Color as indicated on Finish Schedule. Paint embedded portion of bollard. Use primer and two finish coats. See Details. See Specification 055000 Metal Fabrications.
22	Signage (By Others). See Electrical.
23	Wall sconce (By Others). See Electrical. Locate junction box for sconces 5'-0" a.f.f. vertically and 4" from center horizontally. Verify with sign company prior to rough-in.
25	Control joint. For control joints in concrete floor slabs, coordinate location with equipment layout by others. Max. distance between control joints in slabs not to exceed 12'-0". Control joints in walls shall be 4'-0" max from wall intersection or corner and every 20'-0".
27	Pre-finished metal coping at exposed tops only over self-adhered membrane flashing and pressure treated wood blocking. Slope to drain. Color as indicated on Finish Schedule.
35	Submersible foundation sump pump. Provide Zoeller M98 or comparable product. Coordinate location with Civil and tie into Civil's storm drainage system.
47	Provide address identification as directed by the Local Fire Marshal or AHJ, but letter size shall not be less than 4 inches high.
53	Conduit to be centered horizontally for lights in canopy. Verify with sign company prior to rough-in.
56	Metal louver or vent. Color to match adjacent surface. See Mechanical.
278	Prefinished metal ridge/hip cap by metal roofing manufacturer.
318	Painted preformed EIFS cornice and trim, See Specification Section 072400 EIFS Exterior Insulation and Finish System.

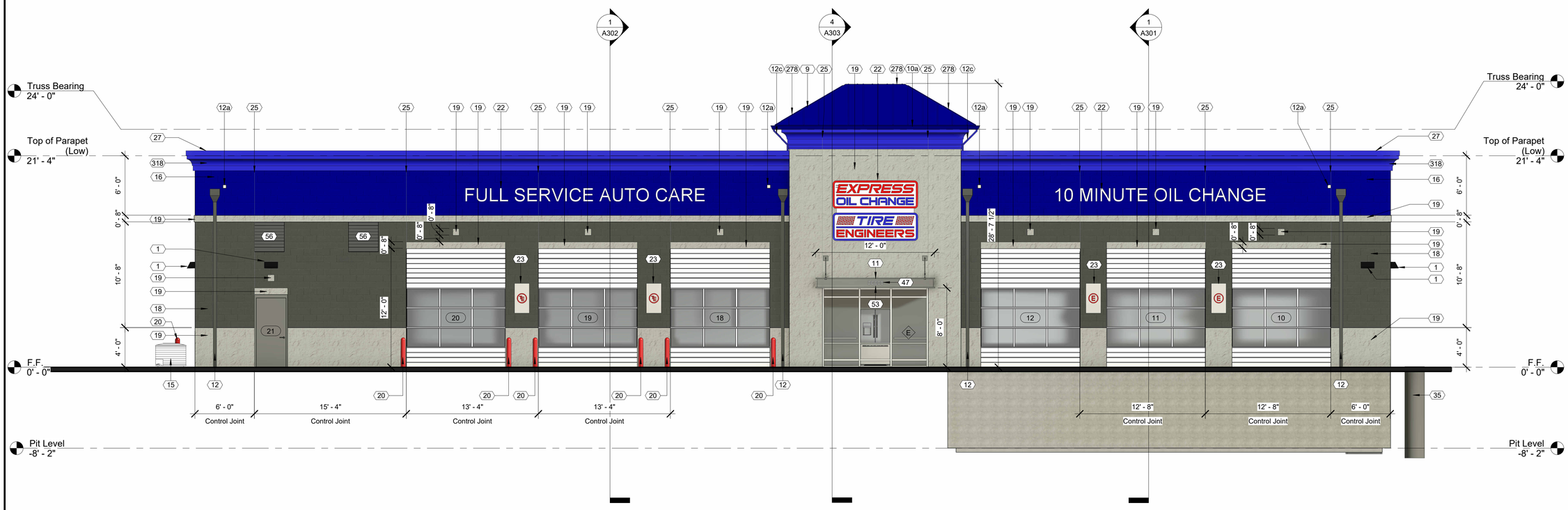

1 01_Exterior Elevation_False Front (West)
3/16" = 1'-0"

AHO ARCHITECTS, LLC
www.ahoarch.com

REGISTERED ARCHITECT
TIMOTHY A. AHO
25347
STATE OF TEXAS
08/12/2026

Express Oil Change & Tire Engineers
Single Building / Right Hand Oil Change / Rear Enter / Side Tire Storage
Cross Roads, Texas (Aubrey)

FINAL

No.	Description	Date
IFP-0	Issue for permit	06/30/2026
IFB-0	Iss. for Bid / AHJ Rev.	08/12/2026

© 2026 Aho Architects, LLC.
All Rights Reserved.

Exterior Elevation - False Front (West)

Project number	26013
Date	06/30/2026
Drawn by	ARC
Checked by	N/A

A200

Scale 3/16" = 1'-0"

9/1/2026 1:41:53 PM

EXTERIOR FINISH MATERIAL LEGEND

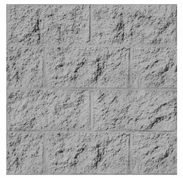

PAINTED SPLIT-FACE CMU

Color: SW7669 Summit Gray
Manuf: Sherwin Williams
Keynote: 19

PAINTED SMOOTH-FACE CMU

Color: SW6966 Blueblood
Manuf: Sherwin Williams
Keynote: 16

PAINTED SMOOTH-FACE CMU

Color: SW7075 Web Gray
Manuf: Sherwin Williams
Keynote: 18

HM DOORS

Color: SW7669 Summit Gray
Manuf: Sherwin Williams

STOREFRONT DOORS/WINDOWS

Color: Clear Anodized Aluminum
Manuf: YKK

BOLLARDS

Color: Safety Red
Manuf: Sherwin Williams

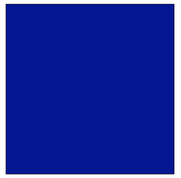

STANDING SEAM METAL ROOF

Color: Royal Blue
Manuf: Berridge

CONDUCTOR HEADS / DOWNSPOUTS

Color: Match SW7075 Web Gray
Manuf: Sherwin Williams

OVERHEAD DOORS

Color: White
Manuf: Overhead Door Company

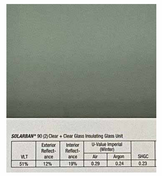

TINTED GLAZING

Color: Solarban 90 on Clear
Manuf: Vitro Architectural Glass

EIFS CORNICE & TRIM

Color: SW6966 Blueblood
Manuf: Sherwin Williams
Keynote: 318

Keynote Schedule	
Tag	Text
1	Wall Pack / Electrical Fixture. See Electrical.
9	Pre-finished standing seam metal roof system. See Specification 074113.16 Standing Seam Metal Roof Panels. See Finish Schedule for color.
10a	Prefinished metal gutter. Match SSMR color.
11	Pre-finished metal canopy. See Details.
15	HVAC condensing unit. See Mechanical.
16	Painted smooth-face CMU. See Specification 042200 Concrete Unit Masonry. Color as indicated on Finish Schedule.
18	Painted smooth-face CMU. See Specification 042200 Concrete Unit Masonry. Color as indicated on Finish Schedule.
19	Painted split-face CMU (bond beam where indicated; see Structural). See Specification 042200 Concrete Unit Masonry. Color as indicated on Finish Schedule. Project 1/2" where indicated on details.
20	4" diameter painted concrete-filled steel pipe bollard. Color as indicated on Finish Schedule. Paint embedded portion of bollard. Use primer and two finish coats. See Details. See Specification 055000 Metal Fabrications.
22	Signage (By Others). See Electrical.
23	Wall sconce (By Others). See Electrical. Locate junction box for sconces 5'-0" a.f.f. vertically and 4" from center horizontally. Verify with sign company prior to rough-in.
25	Control joint. For control joints in concrete floor slabs, coordinate location with equipment layout by others. Max. distance between control joints in slabs not to exceed 12'-0". Control joints in walls shall be 4'-0" max from wall intersection or corner and every 20'-0".
26	Fire Department Lock Box. Locate as directed by the Local Fire Marshal or AHJ. See Specification 104413 Fire Department Lock Box.
27	Pre-finished metal coping at exposed tops only over self-adhered membrane flashing and pressure treated wood blocking. Slope to drain. Color as indicated on Finish Schedule.
35	Submersible foundation sump pump. Provide Zoeller M98 or comparable product. Coordinate location with Civil and tie into Civil's storm drainage system.
47	Provide address identification as directed by the Local Fire Marshal or AHJ, but letter size shall not be less than 4 inches high.
53	Conduit to be centered horizontally for lights in canopy. Verify with sign company prior to rough-in.
56	Metal louver or vent. Color to match adjacent surface. See Mechanical.
59	Gas meter. See Plumbing.
144	Electrical meter. See Electrical.
278	Prefinished metal ridge/hip cap by metal roofing manufacturer.
287	Fire department connection.
318	Painted preformed EIFS cornice and trim, See Specification Section 072400 EIFS Exterior Insulation and Finish System.

1 02_Exterior Elevation_Rear Entry (East)
3/16" = 1'-0"

AHO ARCHITECTS, LLC
www.ahoarch.com

REGISTERED ARCHITECT
TIMOTHY A. AHO
25347
STATE OF TEXAS
08/12/2026

Express Oil Change & Tire Engineers
Single Building / Right Hand Oil Change / Rear Enter / Side Tire Storage
Cross Roads, Texas (Aubrey)

FINAL

No.	Description	Date
IFP-0	Issue for permit	06/30/2026
IFB-0	Iss. for Bid / AHJ Rev.	08/12/2026

© 2026 Aho Architects, LLC.
All Rights Reserved.

Exterior Elevation - Rear Entry (East)

Project number	26013
Date	06/30/2026
Drawn by	ARC
Checked by	N/A

A201

Scale 3/16" = 1'-0"

9/1/2026 1:41:59 PM

EXTERIOR FINISH MATERIAL LEGEND

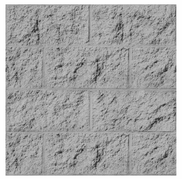

PAINTED SPLIT-FACE CMU

Color: SW7669 Summit Gray
Manuf: Sherwin Williams
Keynote: 19

PAINTED SMOOTH-FACE CMU

Color: SW6966 Blueblood
Manuf: Sherwin Williams
Keynote: 16

PAINTED SMOOTH-FACE CMU

Color: SW7075 Web Gray
Manuf: Sherwin Williams
Keynote: 18

HM DOORS

Color: SW7669 Summit Gray
Manuf: Sherwin Williams

STOREFRONT DOORS/WINDOWS

Color: Clear Anodized Aluminum
Manuf: YKK

BOLLARDS

Color: Safety Red
Manuf: Sherwin Williams

STANDING SEAM METAL ROOF

Color: Royal Blue
Manuf: Berridge

CONDUCTOR HEADS / DOWNSPOUTS

Color: Match SW7075 Web Gray
Manuf: Sherwin Williams

OVERHEAD DOORS

Color: White
Manuf: Overhead Door Company

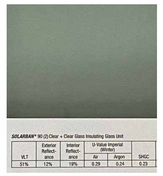

TINTED GLAZING

Color: Solarban 90 on Clear
Manuf: Vitro Architectural Glass

EIFS CORNICE & TRIM

Color: SW6966 Blueblood
Manuf: Sherwin Williams
Keynote: 318

Keynote Schedule

Tag	Text
1	Wall Pack / Electrical Fixture. See Electrical.
9	Pre-finished standing seam metal roof system. See Specification 074113.16 Standing Seam Metal Roof Panels. See Finish Schedule for color.
10a	Prefinished metal gutter. Match SSMR color.
11	Pre-finished metal canopy. See Details.
12	Pre-finished metal conductor head with built-in overflow and downspout. Drainage to discharge on grade, unless indicated on drawings that drainage is to be piped to storm. (See Civil). Provide a pre-finished elbow and concrete splash block. See Specification 077100 Roof Specialties.
12c	Prefinished metal downspout. Match SSMR color. Discharge on TPO roof below.
16	Painted smooth-face CMU. See Specification 042200 Concrete Unit Masonry. Color as indicated on Finish Schedule.
18	Painted smooth-face CMU. See Specification 042200 Concrete Unit Masonry. Color as indicated on Finish Schedule.
19	Painted split-face CMU (bond beam where indicated; see Structural). See Specification 042200 Concrete Unit Masonry. Color as indicated on Finish Schedule. Project 1/2" where indicated on details.
20	4" diameter painted concrete-filled steel pipe bollard. Color as indicated on Finish Schedule. Paint embedded portion of bollard. Use primer and two finish coats. See Details. See Specification 055000 Metal Fabrications.
22	Signage (By Others). See Electrical.
25	Control joint. For control joints in concrete floor slabs, coordinate location with equipment layout by others. Max. distance between control joints in slabs not to exceed 12'-0". Control joints in walls shall be 4'-0" max from wall intersection or corner and every 20'-0".
26	Fire Department Lock Box. Locate as directed by the Local Fire Marshal or AHJ. See Specification 104413 Fire Department Lock Box.
27	Pre-finished metal coping at exposed tops only over self-adhered membrane flashing and pressure treated wood blocking. Slope to drain. Color as indicated on Finish Schedule.
35	Submersible foundation sump pump. Provide Zoeller M98 or comparable product. Coordinate location with Civil and tie into Civil's storm drainage system.
47	Provide address identification as directed by the Local Fire Marshal or AHJ, but letter size shall not be less than 4 inches high.
56	Metal louver or vent. Color to match adjacent surface. See Mechanical.
278	Prefinished metal ridge/hip cap by metal roofing manufacturer.
318	Painted preformed EIFS cornice and trim, See Specification Section 072400 EIFS Exterior Insulation and Finish System.

1 03_Exterior Elevation_Right (South)
3/16" = 1'-0"

AHO ARCHITECTS, LLC
www.ahoarch.com

REGISTERED ARCHITECT
TIMOTHY A. AHO
25347
STATE OF TEXAS
08/12/2026

Express Oil Change & Tire Engineers
Single Building / Right Hand Oil Change / Rear Enter / Side Tire Storage
Cross Roads, Texas (Aubrey)

FINAL

No.	Description	Date
IFP-0	Issue for permit	06/30/2026
IFB-0	Iss. for Bid / AHJ Rev.	08/12/2026

© 2026 Aho Architects, LLC.
All Rights Reserved.

Exterior Elevation - Right (South)

Project number	26013
Date	06/30/2026
Drawn by	ARC
Checked by	N/A

A202

Scale 3/16" = 1'-0"

9/1/2026 1:42:05 PM

EXTERIOR FINISH MATERIAL LEGEND

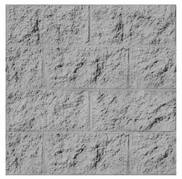

PAINTED SPLIT-FACE CMU

Color: SW7669 Summit Gray
Manuf: Sherwin Williams
Keynote: 19

PAINTED SMOOTH-FACE CMU

Color: SW6966 Blueblood
Manuf: Sherwin Williams
Keynote: 16

PAINTED SMOOTH-FACE CMU

Color: SW7075 Web Gray
Manuf: Sherwin Williams
Keynote: 18

HM DOORS

Color: SW7669 Summit Gray
Manuf: Sherwin Williams

STOREFRONT DOORS/WINDOWS

Color: Clear Anodized Aluminum
Manuf: YKK

BOLLARDS

Color: Safety Red
Manuf: Sherwin Williams

STANDING SEAM METAL ROOF

Color: Royal Blue
Manuf: Berridge

CONDUCTOR HEADS / DOWNSPOUTS

Color: Match SW7075 Web Gray
Manuf: Sherwin Williams

OVERHEAD DOORS

Color: White
Manuf: Overhead Door Company

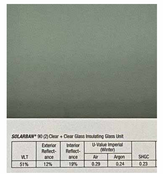

TINTED GLAZING

Color: Solarban 90 on Clear
Manuf: Vitro Architectural Glass

EIFS CORNICE & TRIM

Color: SW6966 Blueblood
Manuf: Sherwin Williams
Keynote: 318

Keynote Schedule	
Tag	Text
1	Wall Pack / Electrical Fixture. See Electrical.
9	Pre-finished standing seam metal roof system. See Specification 074113.16 Standing Seam Metal Roof Panels. See Finish Schedule for color.
10a	Prefinished metal gutter. Match SSMR color.
11	Pre-finished metal canopy. See Details.
12	Pre-finished metal conductor head with built-in overflow and downspout. Drainage to discharge on grade, unless indicated on drawings that drainage is to be piped to storm. (See Civil). Provide a pre-finished elbow and concrete splash block. See Specification 077100 Roof Specialties.
12c	Prefinished metal downspout. Match SSMR color. Discharge on TPO roof below.
15	HVAC condensing unit. See Mechanical.
16	Painted smooth-face CMU. See Specification 042200 Concrete Unit Masonry. Color as indicated on Finish Schedule.
18	Painted smooth-face CMU. See Specification 042200 Concrete Unit Masonry. Color as indicated on Finish Schedule.
19	Painted split-face CMU (bond beam where indicated; see Structural). See Specification 042200 Concrete Unit Masonry. Color as indicated on Finish Schedule. Project 1/2" where indicated on details.
20	4" diameter painted concrete-filled steel pipe bollard. Color as indicated on Finish Schedule. Paint embedded portion of bollard. Use primer and two finish coats. See Details. See Specification 055000 Metal Fabrications.
22	Signage (By Others). See Electrical.
25	Control joint. For control joints in concrete floor slabs, coordinate location with equipment layout by others. Max. distance between control joints in slabs not to exceed 12'-0". Control joints in walls shall be 4'-0" max from wall intersection or corner and every 20'-0".
26	Fire Department Lock Box. Locate as directed by the Local Fire Marshal or AHJ. See Specification 104413 Fire Department Lock Box.
27	Pre-finished metal coping at exposed tops only over self-adhered membrane flashing and pressure treated wood blocking. Slope to drain. Color as indicated on Finish Schedule.
47	Provide address identification as directed by the Local Fire Marshal or AHJ, but letter size shall not be less than 4 inches high.
59	Gas meter. See Plumbing.
144	Electrical meter. See Electrical.
278	Prefinished metal ridge/hip cap by metal roofing manufacturer.
318	Painted preformed EIFS cornice and trim, See Specification Section 072400 EIFS Exterior Insulation and Finish System.

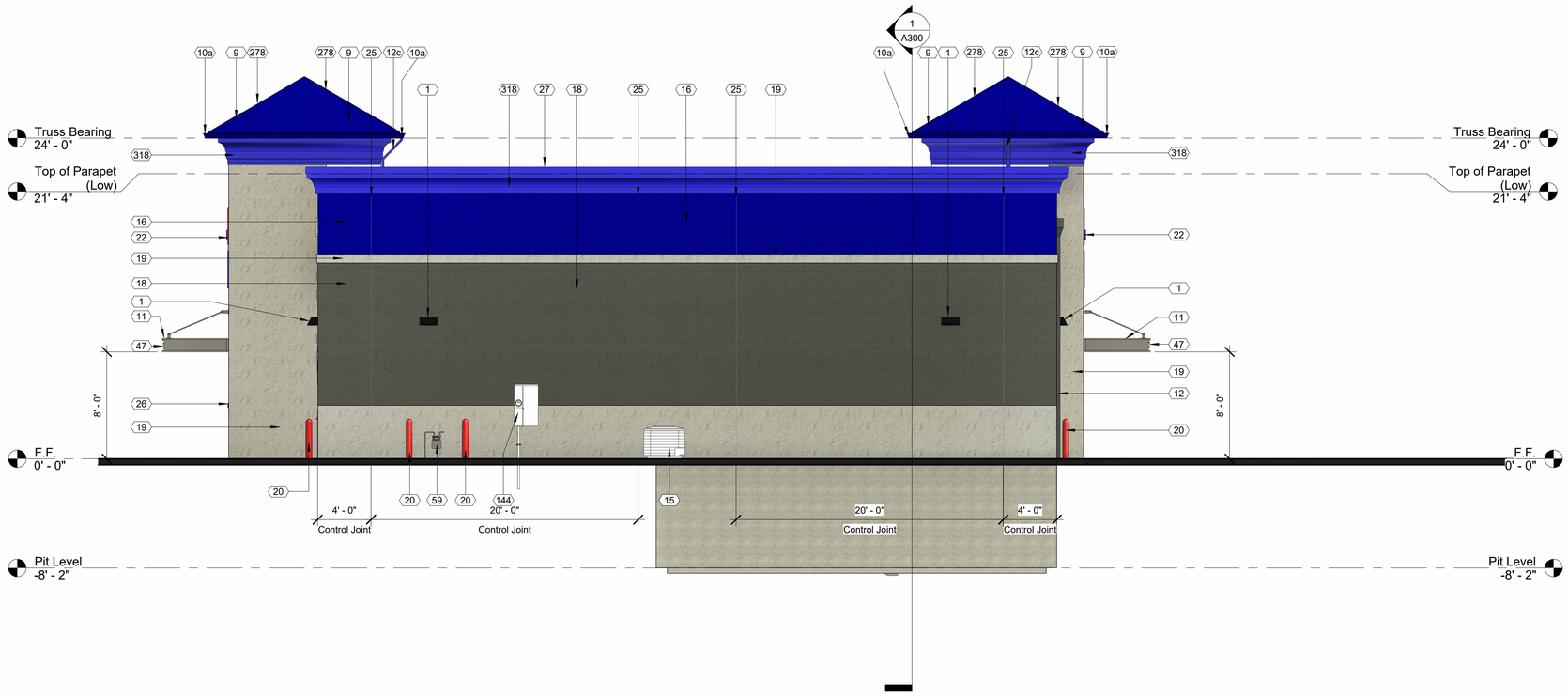

1 04_Exterior Elevation_Left (North)
3/16" = 1'-0"

AHO ARCHITECTS, LLC
www.ahoarch.com

REGISTERED ARCHITECT
TIMOTHY A. AHO
25347
STATE OF TEXAS
08/12/2026

Express Oil Change & Tire Engineers
Single Building / Right Hand Oil Change / Rear Enter / Side Tire Storage
Cross Roads, Texas (Aubrey)

FINAL

No.	Description	Date
IFP-0	Issue for permit	06/30/2026
IFB-0	Iss. for Bid / AHJ Rev.	08/12/2026

© 2026 Aho Architects, LLC.
All Rights Reserved.

Exterior Elevation - Left (North)

Project number	26013
Date	06/30/2026
Drawn by	ARC
Checked by	N/A

A203

Scale 3/16" = 1'-0"

9/1/2026 1:42:11 PM

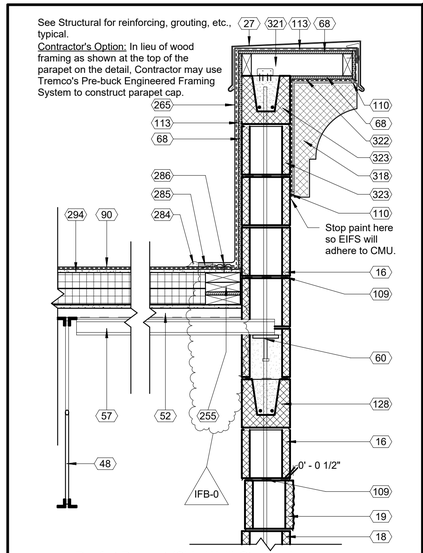

2 Roof at Parapet (Side Wall) Standard
1" = 1'-0"

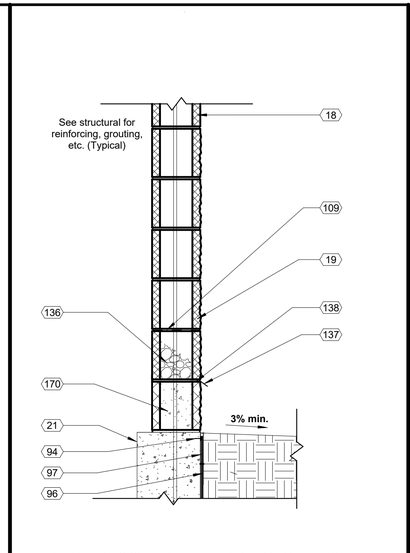

3 DT_Sheet A300_Water Table Detail @ Pit Wall Standard
1" = 1'-0"

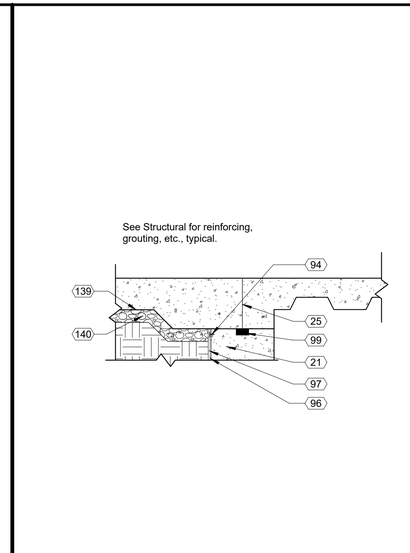

4 DT_Sheet A300_Slab On Grade - Pit Wall Transition
1" = 1'-0"

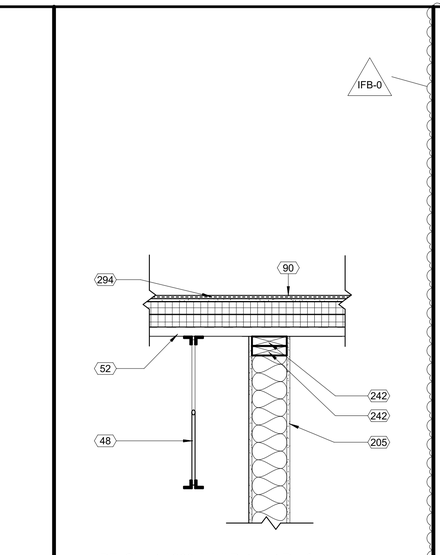

6 DT_Sheet A300_Wall Detail at Roof
1" = 1'-0"

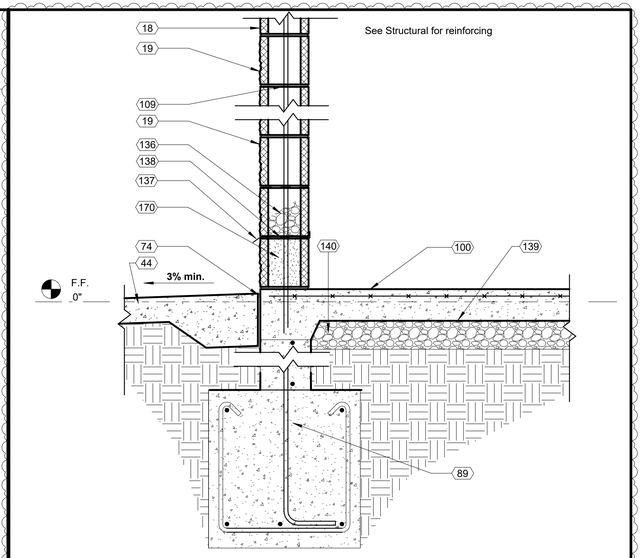

7 DT_Sheet A300_Slab On Grade (Stem Wall)
1" = 1'-0"

Keynote Schedule

Tag	Text
1	Wall Pack / Electrical Fixture. See Electrical.
9	Pre-finished standing seam metal roof system. See Specification 074113.16 Standing Seam Metal Roof Panels. See Finish Schedule for color.
10	Roof hatch. See Specification 077233 Roof Hatches.
10a	Prefinished metal gutter. Match SSMR color.
12c	Prefinished metal downspout. Match SSMR color. Discharge on TPO roof below.
15	HVAC condensing unit. See Mechanical.
16	Painted smooth-face CMU. See Specification 042200 Concrete Unit Masonry. Color as indicated on Finish Schedule.
18	Painted smooth-face CMU. See Specification 042200 Concrete Unit Masonry. Color as indicated on Finish Schedule.
19	Painted split-face CMU (bond beam where indicated; see Structural). See Specification 042200 Concrete Unit Masonry. Color as indicated on Finish Schedule. Project 1/2" where indicated on details.
20	4" diameter painted concrete-filled steel pipe bollard. Color as indicated on Finish Schedule. Paint embedded portion of bollard. Use primer and two finish coats. See Details. See Specification 055000 Metal Fabrications.
21	Cast-in-place concrete wall. See Structural. Membrane waterproofing at perimeter of foundation wall as specified. See Specification 334600 Subdrainage.
25	Control joint. For control joints in concrete floor slabs, coordinate location with equipment layout by others. Max. distance between control joints in slabs not to exceed 12'-0". Control joints in walls shall be 4'-0" max from wall intersection or corner and every 20'-0".

Keynote Schedule

Tag	Text
27	Pre-finished metal coping at exposed tops only over self-adhered membrane flashing and pressure treated wood blocking. Slope to drain. Color as indicated on Finish Schedule.
33	ADA compliant room / exit sign. See Details.
35	Submersible foundation sump pump. Provide Zoeller M98 or comparable product. Coordinate location with Civil and tie into Civil's storm drainage system.
38	Eyewash station. See Plumbing.
44	Concrete apron as required. Slope away from building with 3% slope minimum. See Civil. Maintain 2% slope max at all man doors.
46	Oil tank stairs (By Others).
48	Bar joist. See Structural.
51	Attic access ladder.
52	Galvanized metal roof deck. See Structural.
56	Metal louver or vent. Color to match adjacent surface. See Mechanical.
57	Joist extension. See Structural.
59	Gas meter. See Plumbing.
60	Steel plate with headed studs. See Structural.
66	Interior wall mounted ladder. See Details. See Specification 055133 Ladders. Color as indicated on Finish Schedule.
68	1/2" exterior plywood sheathing.
74	1/2" expansion joint with backer rod and sealant.
89	Concrete foundation. See Structural.

Keynote Schedule

Tag	Text
90	Fully adhered TPO membrane roofing installed per manufacturer's written instructions. See Specification 075423 Thermoplastic Polyolefin (TPO) Roofing.
94	Fasteners at 12" max o.c. for securing subdrainage to pit wall. Follow manufacturer's installation instructions.
96	CCW MiraClay woven geotextile against wall/slab.
97	CCW MiraDrain 6200.
99	CCW MiraStop 8W.
100	Concrete slab. See Structural.
109	Horizontal joint reinforcement at 16" o.c. vertical.
110	Sealant with backer rod.
113	Fluid applied vapor permeable air barrier. See Specification 072726 Fluid Applied Membrane Air Barrier.
128	Painted smooth-face 8" concrete-filled "U" block bond beam. Condition varies. See Structural.
136	Pea gravel above through wall flashing.
137	Flashing between first and second course to utilize BlockFlash in addition to the pea gravel specified. Provide a drainage mat in open masonry cell directly above the BlockFlash pan.
138	Drainable weeps at every third mortar joint.
139	10 mil vapor barrier. See Specification 072600 Vapor Retarders.
140	Porous fill. See Geotechnical Report.
170	Fill first course of CMU with grout.
205	1 layer of 1/2" painted gypsum board on both sides of 2"x6" wood studs at 16" o.c. Infill with kraft-faced R-20 batt insulation. Kraft in contact with gypsum board.

Keynote Schedule

Tag	Text
213	8-foot-high chain-link fence with 3'-0"x7'-0" gate. Fence poles to be surface mounted.
214	10K Lift (By Others).
215	12K Lift (By Others).
217	Wheel balancer (By Others).
220	Scissor lift alignment (By Others).
222	Alignment scarecrow (By Others).
223	Work bench (By Others).
224	Strut compressor (By Others).
226	Computer podium (By Others).
227	Cashier computer station (By Others). Clear opening for cashier computer station must be 38 ½" wide minimum. No Exceptions.
228	Convex mirrors (By Others).
232	Bracket mounted fire extinguisher. See Specification Section 104416 Fire Extinguishers. Provide sign at all fire extinguisher locations which may be visually obstructed. See Details.
233	275-gallon Class IIIB new oil tank (By Others).
234	928-gallon Class IIIB new oil tank (By Others). Provide a 2" concrete walkway cap with non-slip surface over (oil tank By Others). Coordinate with equipment supplier prior to installation.
235	928-gallon Class IIIB waste oil tank (By Others). Provide a 2" concrete walkway cap with non-slip surface over (oil tank By Others). Coordinate with equipment supplier prior to installation.

Keynote Schedule

Tag	Text
242	2x pressure treated wood top plate. Use barrier to prevent corrosion between wood and metal.
255	2x pressure treated wood blocking. Use barrier to prevent corrosion between wood and metal.
265	TPO membrane turned vertically up the wall and fastened to wood blocking at top roof curb, or top of wall framing per detail. Adhere TPO membrane to wall substrate with manufacturer approved bonding adhesive.
278	Prefinished metal ridge/hip cap by metal roofing manufacturer.
284	Cut edge sealant at TPO roof membrane flashing.
285	Hot air weld at TPO membrane and membrane flashing.
286	Fastener and seam fastening plate.
294	Polyisocyanurate insulation board (See TPO Spec for required R-value). Provide ½" cover board, mechanically fastened, over the top of insulation in locations where membrane roofing is to be applied.
318	Painted preformed EIFS cornice and trim, See Specification Section 072400 EIFS Exterior Insulation and Finish System.
321	2x pressure treated wood framing spaced at 2'-0" o.c., minimum. Anchor 2x framing into grouted masonry cells using Simpson Strong Tie A23 angle ties. Secure angle ties on each side of framing members using 4 concrete screws on each side.
322	Vapor permeable air and water resistive barrier membrane. See Specification Section 072400 EIFS Exterior Insulation and Finish System.
323	Unpainted smooth-face CMU (bond beam where indicated; see Structural). See Specification 042200 Concrete Unit Masonry.
333	20" x 30" Exterior attic access door, see Specification Section 083113 Access Doors and Frames.

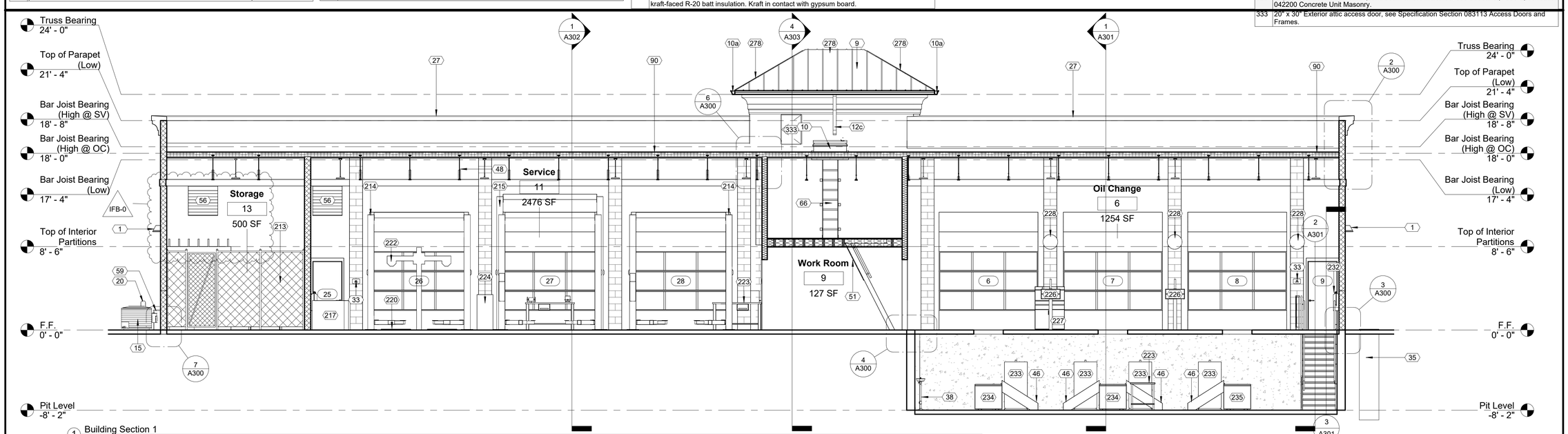

1 Building Section 1
3/16" = 1'-0"

AHO ARCHITECTS, LLC
www.ahoarch.com

REGISTERED ARCHITECT
TIMOTHY A. AHO
25347
STATE OF TEXAS
08/12/2026

Express Oil Change & Tire Engineers

Single Building / Right Hand Oil Change / Rear Enter / Side Tire Storage

Cross Roads, Texas (Aubrey)

FINAL

No.	Description	Date
IFP-0	Issue for permit	06/30/2026
IFB-0	Iss. for Bid / AHJ Rev.	08/12/2026

© 2026 Aho Architects, LLC. All Rights Reserved.

Building Sections

Project number	26013
Date	06/30/2026
Drawn by	ARC
Checked by	N/A

A300

Scale: As indicated

9/1/2026 1:42:12 PM

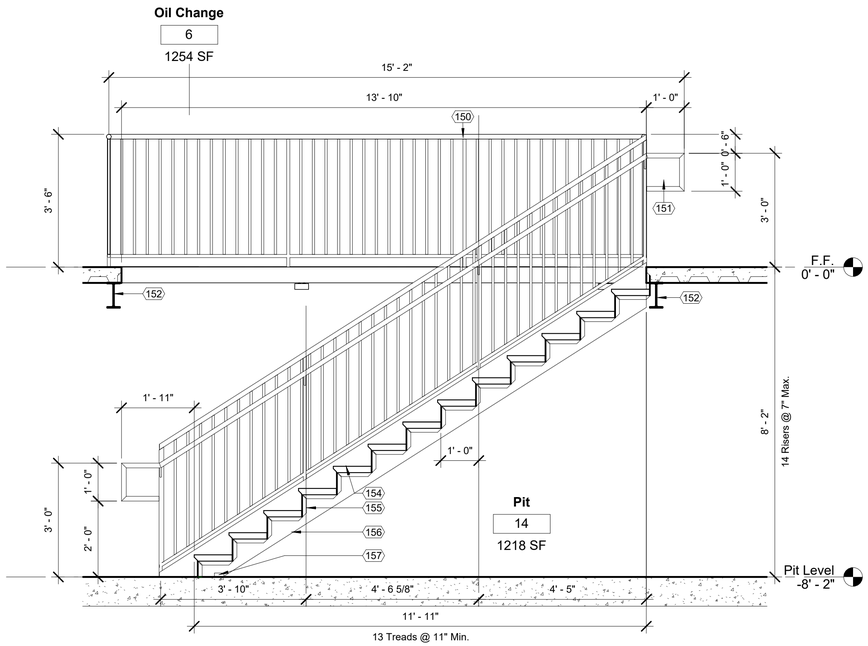

2 Stair Section 1
1/2" = 1'-0"

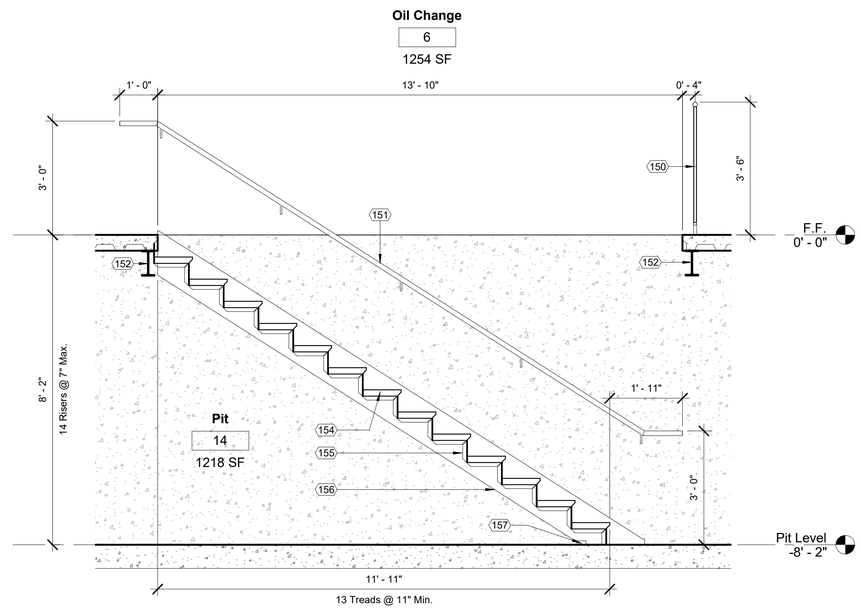

3 Stair Section 2
1/2" = 1'-0"

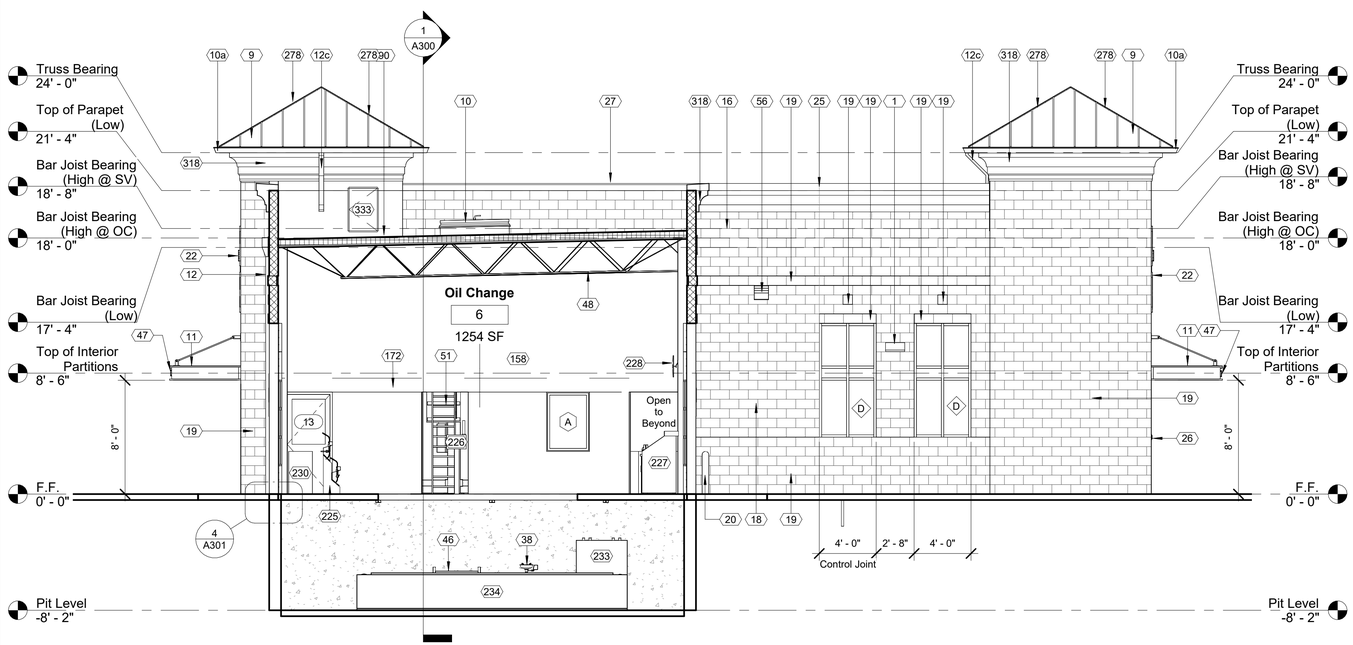

1 Building Section 2
3/16" = 1'-0"

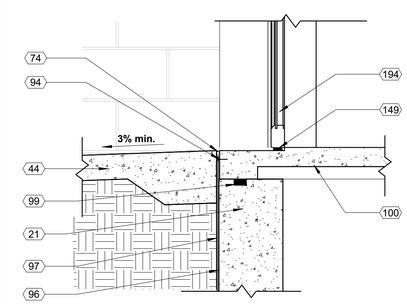

4 DT_Sheet A301_Slab Detail @ Pit Wall
1" = 1'-0"

Keynote Schedule

Tag	Text
1	Wall Pack / Electrical Fixture. See Electrical.
9	Pre-finished standing seam metal roof system. See Specification 074113.16 Standing Seam Metal Roof Panels. See Finish Schedule for color.
10	Roof hatch. See Specification 077233 Roof Hatches.
10a	Prefinished metal gutter. Match SSMR color.
11	Pre-finished metal canopy. See Details.
12	Pre-finished metal conductor head with built-in overflow and downspout. Drainage to discharge on grade, unless indicated on drawings that drainage is to be piped to storm, (See Civil). Provide a pre-finished elbow and concrete splash block. See Specification 077100 Roof Specialties.
12c	Prefinished metal downspout. Match SSMR color. Discharge on TPO roof below.
16	Painted smooth-face CMU. See Specification 042200 Concrete Unit Masonry. Color as indicated on Finish Schedule.
18	Painted smooth-face CMU. See Specification 042200 Concrete Unit Masonry. Color as indicated on Finish Schedule.
19	Painted split-face CMU (bond beam where indicated; see Structural). See Specification 042200 Concrete Unit Masonry. Color as indicated on Finish Schedule. Project 1/2" where indicated on details.
20	4" diameter painted concrete-filled steel pipe bollard. Color as indicated on Finish Schedule. Paint embedded portion of bollard. Use primer and two finish coats. See Details. See Specification 055000 Metal Fabrications.
21	Cast-in-place concrete wall. See Structural. Membrane waterproofing at perimeter of foundation wall as specified. See Specification 334600 Subdrainage.
22	Signage (By Others). See Electrical.
25	Control joint. For control joints in concrete floor slabs, coordinate location with equipment layout by others. Max. distance between control joints in slabs not to exceed 12'-0". Control joints in walls shall be 4'-0" max from wall intersection or corner and every 20'-0".
26	Fire Department Lock Box. Locate as directed by the Local Fire Marshal or AHJ. See Specification 104413 Fire Department Lock Box.
27	Pre-finished metal coping at exposed tops only over self-adhered membrane flashing and pressure treated wood blocking. Slope to drain. Color as indicated on Finish Schedule.
38	Eyewash station. See Plumbing.
44	Concrete apron as required. Slope away from building with 3% slope minimum. See Civil. Maintain 2% slope max at all man doors.
46	Oil tank stairs (By Others).
47	Provide address identification as directed by the Local Fire Marshal or AHJ, but letter size shall not be less than 4 inches high.
48	Bar joist. See Structural.
51	Attic access ladder.
56	Metal louver or vent. Color to match adjacent surface. See Mechanical.
74	1/2" expansion joint with backer rod and sealant.
90	Fully adhered TPO membrane roofing installed per manufacturer's written instructions. See Specification 075423 Thermoplastic Polyolefin (TPO) Roofing.
94	Fasteners at 12" max o.c. for securing subdrainage to pit wall. Follow manufacturer's installation instructions.
96	CCW MiraClay woven geotextile against wall/slab.
97	CCW MiraDrain 6200.
99	CCW MiraStop BW.
100	Concrete slab. See Structural.
149	1/2" recess at scheduled door. See Structural.
150	Painted guardrail with painted 1/2" round pickets at 4" max o.c. See Finish Schedule for color. See Specification 055213 Pipe and Tube Railings.
151	Painted 1-1/2" outside diameter pipe handrail. Return handrail to guard/wall. Typical. See Finish Schedule for color. See Specification 055213 Pipe and Tube Railings.
152	Paint all structural steel P-5 Safety Yellow.
154	Concrete filled pre-fabricated metal pan stair treads with safety yellow abrasive nosing, full grit, full length, adhered and fastened. Typical. See Finish Schedule for color. See Specification 055113 Metal Pan Stairs.
155	1-1/4" steel angle clips.
156	10" steel channel stringer. See Finish Schedule for color. See Specification 055113 Metal Pan Stairs.
157	Simpson THD50400.
158	Vinyl letters (By Others).
172	Ensure paint line occurs at top of door and window frames. Ensure all openings, alcoves and windows align with top of door frame. Typical in Oil and Service Bays.
194	Scheduled door. See plans for details.
225	Lube console (By Others).
226	Computer podium (By Others).
227	Cashier computer station (By Others). Clear opening for cashier computer station must be 38 ½" wide minimum. No Exceptions.
228	Convex mirrors (By Others).
230	Tool cart (By Others).
233	275-gallon Class IIIB new oil tank (By Others).
234	928-gallon Class IIIB new oil tank (By Others). Provide a 2" concrete walkway cap with non-slip surface over (oil tank By Others). Coordinate with equipment supplier prior to installation.
278	Prefinished metal ridge/hip cap by metal roofing manufacturer.
318	Painted preformed EIFS cornice and trim, See Specification Section 072400 EIFS Exterior Insulation and Finish System.
333	20" x 30" Exterior attic access door, see Specification Section 083113 Access Doors and Frames.

AHO ARCHITECTS, LLC
www.ahoarch.com

REGISTERED ARCHITECT
TIMOTHY A. AHO
25347
STATE OF TEXAS
08/12/2026

Express Oil Change & Tire Engineers

Single Building / Right Hand Oil Change / Rear Enter / Side Tire Storage

Cross Roads, Texas (Aubrey)

FINAL

No.	Description	Date
IFP-0	Issue for permit	06/30/2026
IFB-0	Iss. for Bid / AHJ Rev.	08/12/2026

© 2026 Aho Architects, LLC.
All Rights Reserved.

Building Sections

Project number	26013
Date	06/30/2026
Drawn by	ARC
Checked by	N/A

A301

Scale: As indicated

9/1/2026 1:42:15 PM

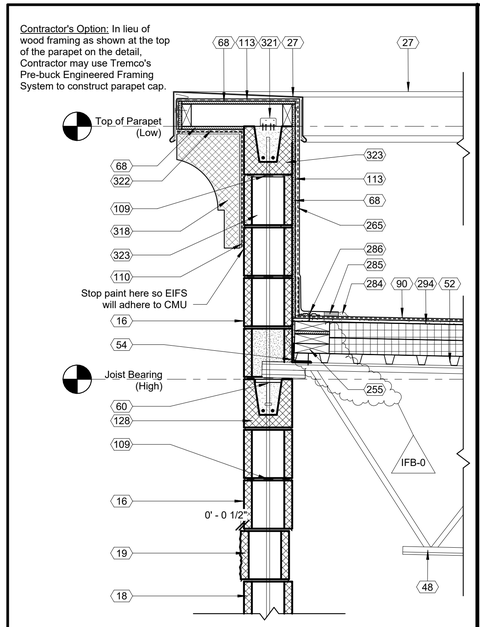

2 DT_Sheet A302 Roof at Parapet (High) Standard
1" = 1'-0"

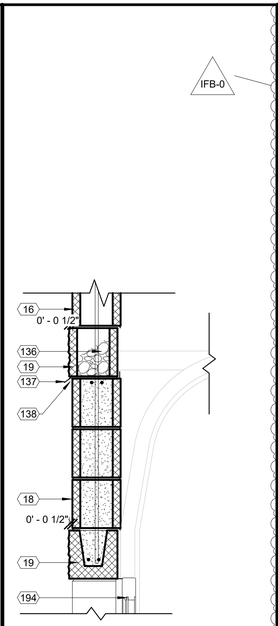

3 DT_Sheet A302_OH Door Head Detail
1" = 1'-0"

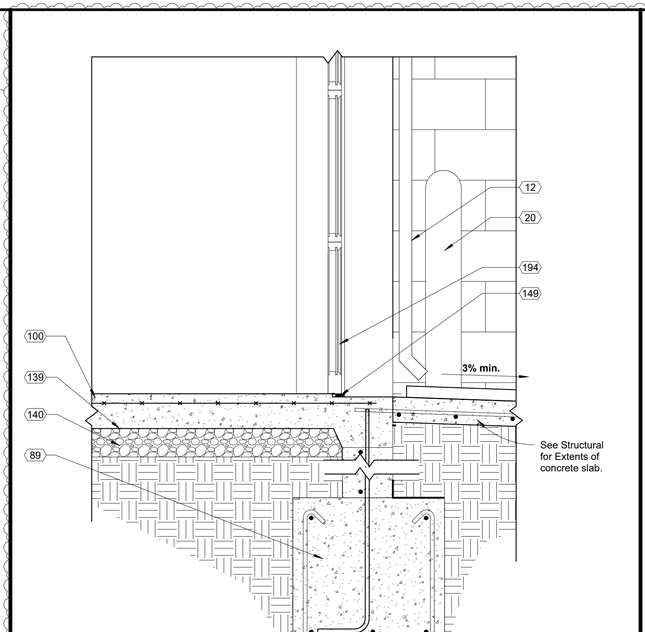

4 DT_Sheet A302_Slab on Grade @ OH Door w/ DS (Stem Wall)
1" = 1'-0"

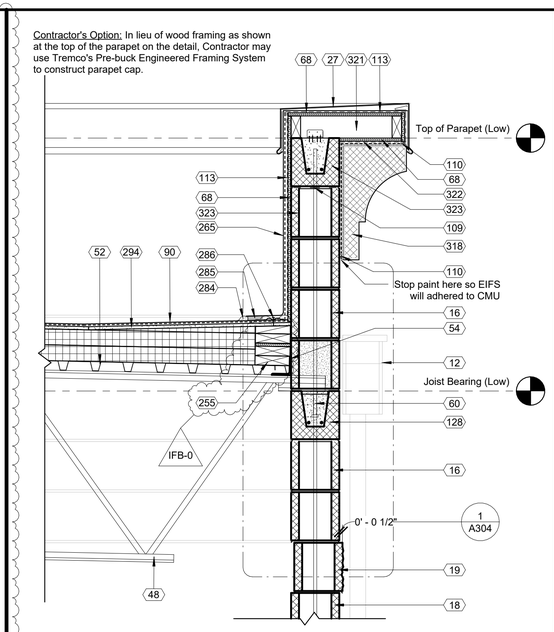

5 DT_Sheet A302 Roof at Parapet (Low) Standard
1" = 1'-0"

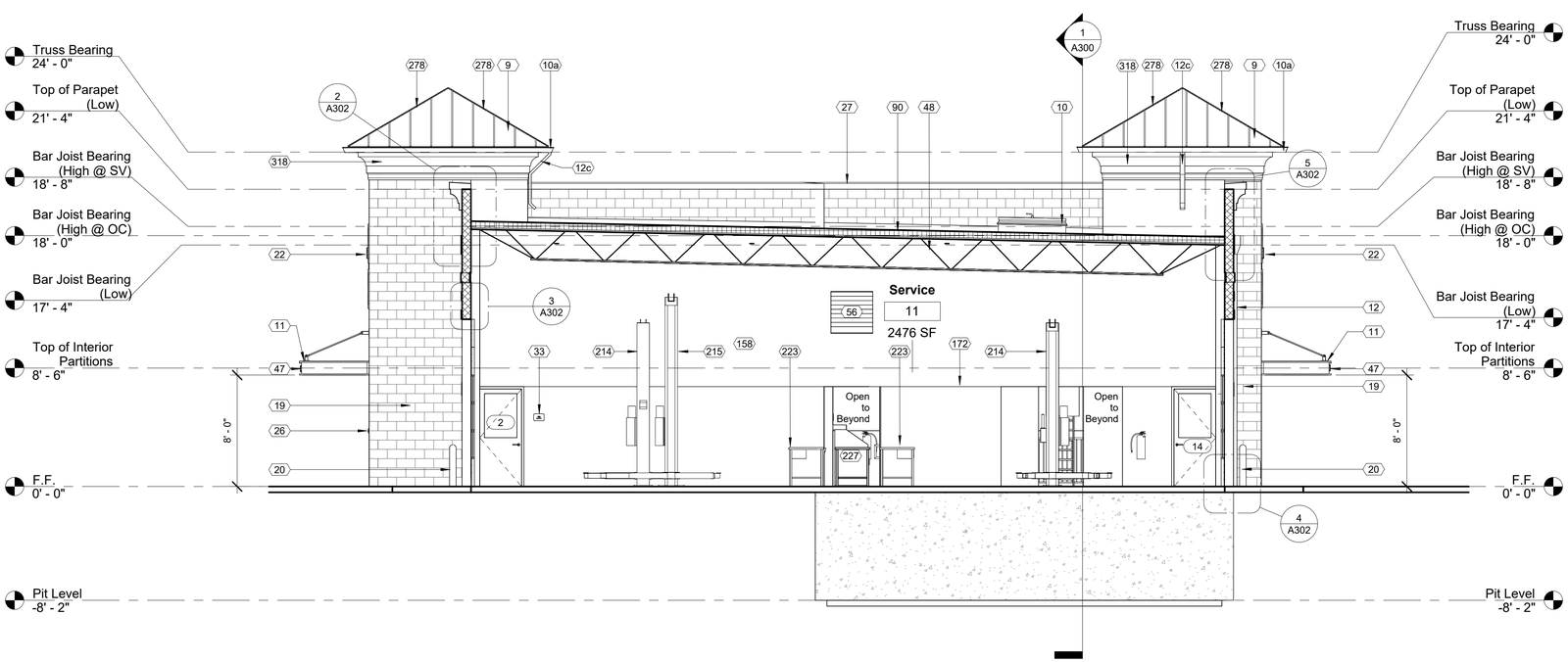

1 Building Section 3
3/16" = 1'-0"

Keynote Schedule

Tag	Text
9	Pre-finished standing seam metal roof system. See Specification 074113.16 Standing Seam Metal Roof Panels. See Finish Schedule for color.
10	Roof hatch. See Specification 077233 Roof Hatches.
10a	Prefinished metal gutter. Match SSMR color.
11	Pre-finished metal canopy. See Details.
12	Pre-finished metal conductor head with built-in overflow and downspout. Drainage to discharge on grade, unless indicated on drawings that drainage is to be piped to storm, (See Civil). Provide a pre-finished elbow and concrete splash block. See Specification 077100 Roof Specialties.
12c	Prefinished metal downspout. Match SSMR color. Discharge on TPO roof below.
16	Painted smooth-face CMU. See Specification 042200 Concrete Unit Masonry. Color as indicated on Finish Schedule.
18	Painted smooth-face CMU. See Specification 042200 Concrete Unit Masonry. Color as indicated on Finish Schedule.
19	Painted split-face CMU (bond beam where indicated; see Structural). See Specification 042200 Concrete Unit Masonry. Color as indicated on Finish Schedule. Project 1/2" where indicated on details.
20	4" diameter painted concrete-filled steel pipe bollard. Color as indicated on Finish Schedule. Paint embedded portion of bollard. Use primer and two finish coats. See Details. See Specification 055000 Metal Fabrications.
22	Signage (By Others). See Electrical.
26	Fire Department Lock Box. Locate as directed by the Local Fire Marshal or AHJ. See Specification 104413 Fire Department Lock Box.
27	Pre-finished metal coping at exposed tops only over self-adhered membrane flashing and pressure treated wood blocking. Slope to drain. Color as indicated on Finish Schedule.
33	ADA compliant room / exit sign. See Details.
47	Provide address identification as directed by the Local Fire Marshal or AHJ, but letter size shall not be less than 4 inches high.
48	Bar joist. See Structural.
52	Galvanized metal roof deck. See Structural.
54	Steel angle. See Structural.
56	Metal louver or vent. Color to match adjacent surface. See Mechanical.
60	Steel plate with headed studs. See Structural.
68	1/2" exterior plywood sheathing.
89	Concrete foundation. See Structural.
90	Fully adhered TPO membrane roofing installed per manufacturer's written instructions. See Specification 075423 Thermoplastic Polyolefin (TPO) Roofing.
100	Concrete slab. See Structural.
109	Horizontal joint reinforcement at 16" o.c. vertical.
110	Sealant with backer rod.
113	Fluid applied vapor permeable air barrier. See Specification 072726 Fluid Applied Membrane Air Barrier.
128	Painted smooth-face 8" concrete-filled "U" block bond beam. Condition varies. See Structural.
136	Pea gravel above through wall flashing.
137	Flashing between first and second course to utilize BlockFlash in addition to the pea gravel specified. Provide a drainage mat in open masonry cell directly above the BlockFlash pan.
138	Drainable weeps at every third mortar joint.
139	10 mil vapor barrier. See Specification 072600 Vapor Retarders.
140	Porous fill. See Geotechnical Report.
149	1/2" recess at scheduled door. See Structural.
158	Vinyl letters (By Others).
172	Ensure paint line occurs at top of door and window frames. Ensure all openings, alcoves and windows align with top of door frame. Typical in Oil and Service Bays.
194	Scheduled door. See plans for details.
214	10K Lift (By Others).
215	12K Lift (By Others).
223	Work bench (By Others).
227	Cashier computer station (By Others). Clear opening for cashier computer station must be 38 ½" wide minimum. No Exceptions.
255	2x pressure treated wood blocking. Use barrier to prevent corrosion between wood and metal.
265	TPO membrane turned vertically up the wall and fastened to wood blocking at top roof curb, or top of wall framing per detail. Adhere TPO membrane to wall substrate with manufacturer approved bonding adhesive.
278	Prefinished metal ridge/hip cap by metal roofing manufacturer.
284	Cut edge sealant at TPO roof membrane flashing.
285	Hot air weld at TPO membrane and membrane flashing.
286	Fastener and seam fastening plate.
294	Polyisocyanurate insulation board (See TPO Spec for required R-value). Provide ½" cover board, mechanically fastened, over the top of insulation in locations where membrane roofing is to be applied.
318	Painted preformed EIFS cornice and trim, See Specification Section 072400 EIFS Exterior Insulation and Finish System.
321	2x pressure treated wood framing spaced at 2'-0" o.c., minimum. Anchor 2x framing into grouted masonry cells using Simpson Strong Tie A23 angle ties. Secure angle ties on each side of framing members using 4 concrete screws on each side.
322	Vapor permeable air and water resistive barrier membrane. See Specification Section 072400 EIFS Exterior Insulation and Finish System.
323	Unpainted smooth-face CMU (bond beam where indicated; see Structural). See Specification 042200 Concrete Unit Masonry.

AHO ARCHITECTS, LLC
www.ahoarch.com

REGISTERED ARCHITECT TIMOTHY A. AHO 25347 STATE OF TEXAS
08/12/2026

Express Oil Change & Tire Engineers

Single Building / Right Hand Oil Change / Rear Enter / Side Tire Storage

Cross Roads, Texas (Aubrey)

FINAL

No.	Description	Date
IFP-0	Issue for permit	06/30/2026
IFB-0	Iss. for Bid / AHJ Rev.	08/12/2026

© 2026 Aho Architects, LLC. All Rights Reserved.

Building Sections

Project number	26013
Date	06/30/2026
Drawn by	ARC
Checked by	N/A

A302

Scale: As indicated

9/1/2026 1:42:16 PM

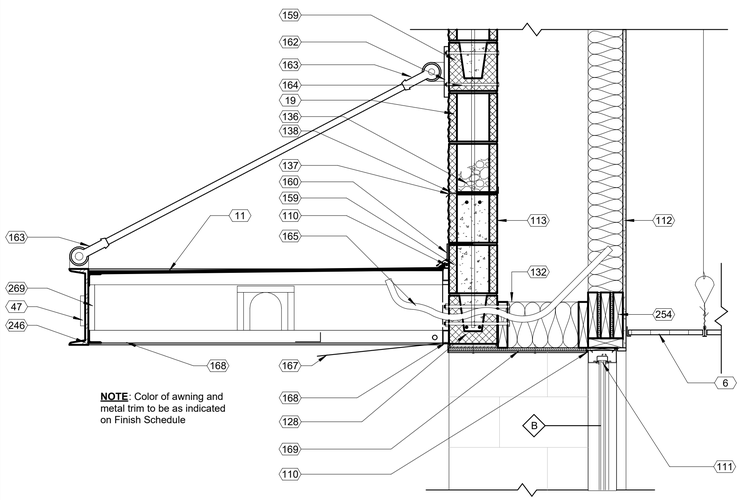

NOTE: Color of awning and metal trim to be as indicated on Finish Schedule

1 DT_Sheet A303_Awning Section
1" = 1'-0"

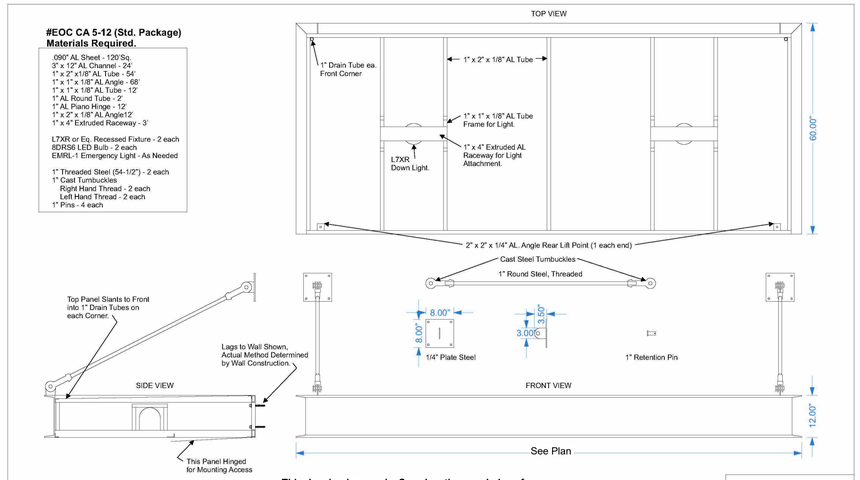

2 DT_Sheet A303_Awning Details
N.T.S.

Keynote Schedule

Tag	Text
3	Location of 30" wide refrigerator (By Others).
6	Lay-in acoustical ceiling tile and grid, supported from structure.
10	Roof hatch. See Specification 077233 Roof Hatches.
10a	Prefinished metal gutter. Match SSMR color.
11	Pre-finished metal canopy. See Details.
12c	Prefinished metal downspout. Match SSMR color. Discharge on TPO roof below.
19	Painted split-face CMU (bond beam where indicated; see Structural). See Specification 042200 Concrete Unit Masonry. Color as indicated on Finish Schedule. Project 1/2" where indicated on details.
22	Signage (By Others). See Electrical.
27	Pre-finished metal coping at exposed tops only over self-adhered membrane flashing and pressure treated wood blocking. Slope to drain. Color as indicated on Finish Schedule.
47	Provide address identification as directed by the Local Fire Marshal or AHJ, but letter size shall not be less than 4 inches high.
48	Bar joist. See Structural.
51	Attic access ladder.
66	Interior wall mounted ladder. See Details. See Specification 055133 Ladders. Color as indicated on Finish Schedule.
90	Fully adhered TPO membrane roofing installed per manufacturer's written instructions. See Specification 075423 Thermoplastic Polyolefin (TPO) Roofing.
109	Horizontal joint reinforcement at 16" o.c. vertical.
110	Sealant with backer rod.
111	Aluminum storefront with insulated glazing. See Details.
112	Painted 1/2" gypsum board on 2x6 wood studs at 16" o.c. with kraft-face R-20 batt insulation (kraft in contact with gypsum board). See Details.
113	Fluid applied vapor permeable air barrier. See Specification 072726 Fluid Applied Membrane Air Barrier.
125	1/2" painted gypsum board over rigid insulation secured to z-clips over 8" smooth-face CMU.
128	Painted smooth-face 8" concrete-filled "U" block bond beam. Condition varies. See Structural.
132	2x wood framing @ 16" o.c. with kraft face R-38 batt insulation in between. Kraft face in contact with substrate.
136	Pea gravel above through wall flashing.
137	Flashing between first and second course to utilize BlockFlash in addition to the pea gravel specified. Provide a drainage mat in open masonry cell directly above the BlockFlash pan.
138	Drainable weeps at every third mortar joint.
159	Painted smooth-face grout-filled CMU where canopy attaches to wall construction. See Structural.
160	Pre-finished aluminum flashing to match color of canopy. Turn out onto canopy.
162	Pre-finished 8"x8"x1/4" steel plate anchored to wall using through wall fasteners by Canopy manufacturer's designated design.
163	Pre-finished 1" cast steel turnbuckle with 1" threaded steel rod and 1" pins.
164	Anchor canopy to wall using through wall fasteners by Canopy manufacturer's designated design.
165	Provide a 1" flexible conduit extending 12" beyond the face of the wall for canopy lighting. See Electrical.
167	Pre-finished hinged panel for mounting access. Color to match canopy.
168	1"x2" aluminum tube. Typical.
169	Pre-finished metal over 1/2" pressure treated plywood. Terminate at aluminum storefront. Turn up pre-finished metal 1" at edge where metal meets canopy. Secure panel to plywood with fasteners compatible with type and color of metal being used.
218	Service Writing Desk.
227	Cashier computer station (By Others). Clear opening for cashier computer station must be 38 ½" wide minimum. No Exceptions.
231	Beverage refrigerator (By Others).
246	3"x12" aluminum channel.
254	2x wood framing at opening.
269	1" drain tube beyond. Slope top panel of canopy toward the drain tube at the front of the canopy.
318	Painted preformed EIFS cornice and trim, See Specification Section 072400 EIFS Exterior Insulation and Finish System.
333	20" x 30" Exterior attic access door, see Specification Section 083113 Access Doors and Frames.

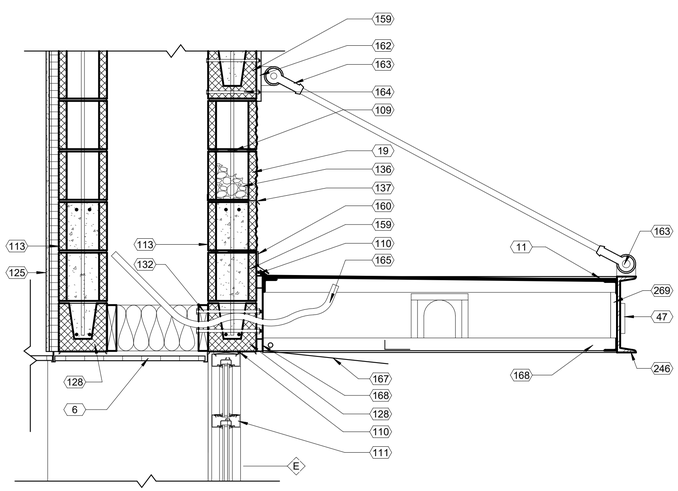

3 DT_Sheet A303_Awning Section @ False Entry
1" = 1'-0"

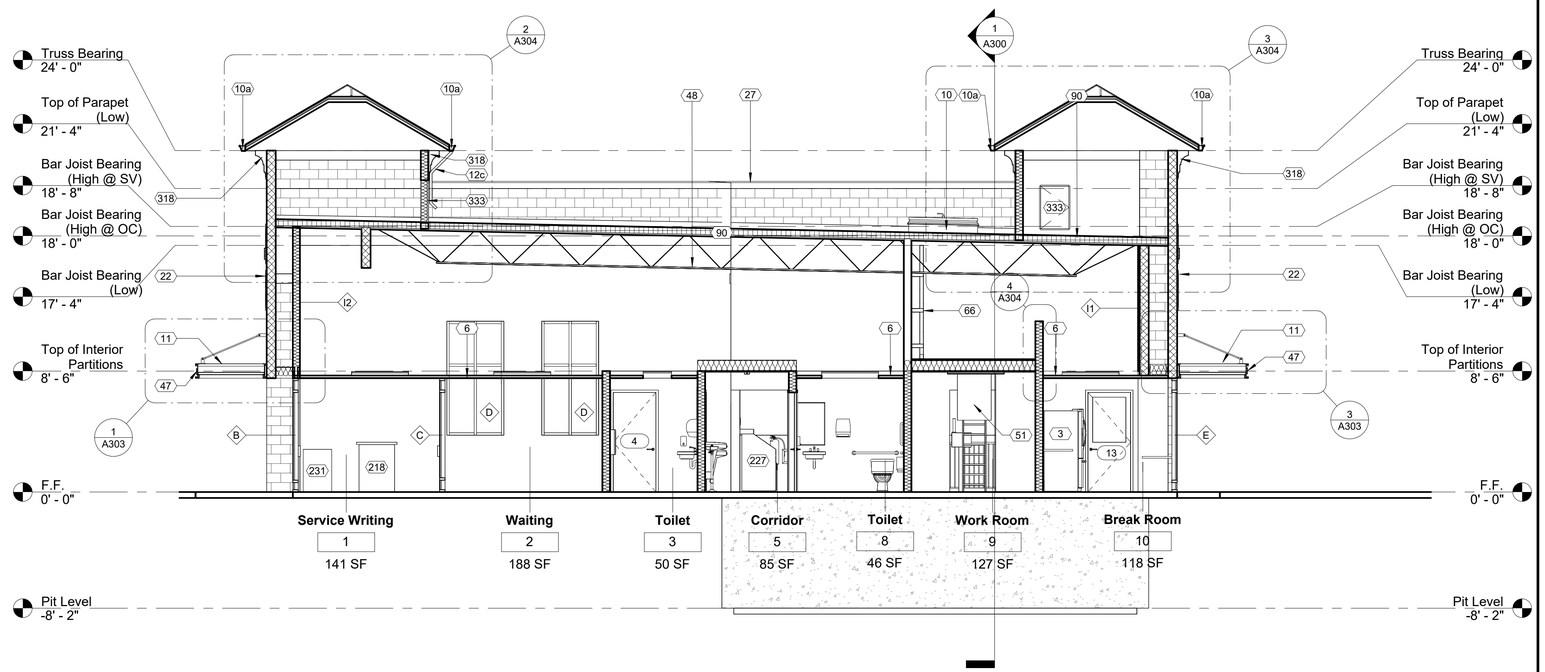

4 Building Section 4
3/16" = 1'-0"

AHO ARCHITECTS, LLC
www.ahoarch.com

REGISTERED ARCHITECT TIMOTHY A. AHO 25347 STATE OF TEXAS
08/12/2026

Express Oil Change & Tire Engineers

Single Building / Right Hand Oil Change / Rear Enter / Side Tire Storage

Cross Roads, Texas (Aubrey)

FINAL

No.	Description	Date
IFP-0	Issue for permit	06/30/2026
IFB-0	Iss. for Bid / AHJ Rev.	08/12/2026

© 2026 Aho Architects, LLC. All Rights Reserved.

Building Sections

Project number	26013
Date	06/30/2026
Drawn by	ARC
Checked by	N/A

A303

Scale As indicated

9/1/2026 1:42:19 PM

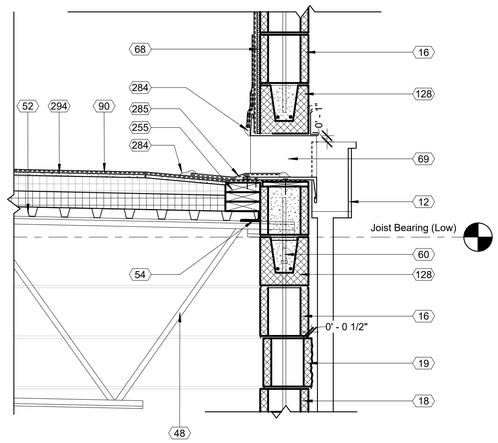

1 DT_Sheet A304 Roof Scupper Detail (Rear) Standard
1" = 1'-0"

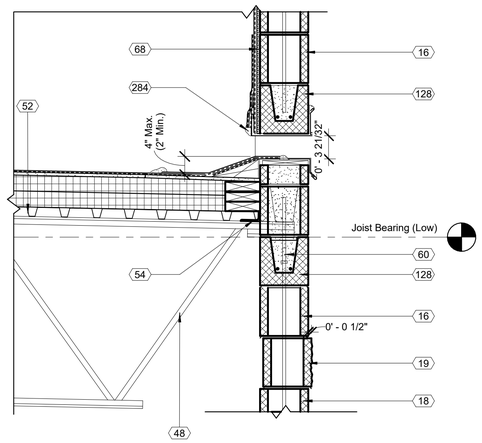

5 DT_Sheet A304 Emergency Roof Scupper Detail
1" = 1'-0"

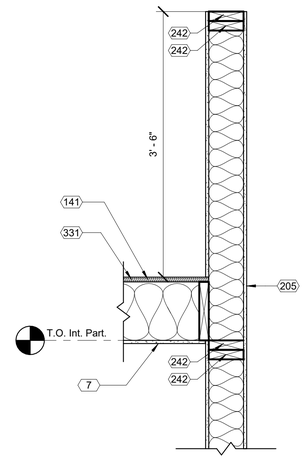

4 DT_Sheet A300_Wall Detail @ Platform (Wall Extended for 42")
1" = 1'-0"

Keynote Schedule

Tag	Text
7	Painted 1/2" gypsum board ceiling secured to structure above. 5/8" Type X where indicated. See Details for # of layers.
9	Pre-finished standing seam metal roof system. See Specification 074113.16 Standing Seam Metal Roof Panels. See Finish Schedule for color.
10a	Prefinished metal gutter. Match SSMR color.
12	Pre-finished metal conductor head with built-in overflow and downspout. Drainage to discharge on grade, unless indicated on drawings that drainage is to be piped to storm, (See Civil). Provide a pre-finished elbow and concrete splash block. See Specification 077100 Roof Specialties.
14	Painted smooth-face CMU (bond beam where indicated; see Structural). See Specification 042200 Concrete Unit Masonry. Color as indicated on Finish Schedule.
16	Painted smooth-face CMU. See Specification 042200 Concrete Unit Masonry. Color as indicated on Finish Schedule.
18	Painted smooth-face CMU. See Specification 042200 Concrete Unit Masonry. Color as indicated on Finish Schedule.
19	Painted split-face CMU (bond beam where indicated; see Structural). See Specification 042200 Concrete Unit Masonry. Color as indicated on Finish Schedule. Project 1/2" where indicated on details.
27	Pre-finished metal coping at exposed tops only over self-adhered membrane flashing and pressure treated wood blocking. Slope to drain. Color as indicated on Finish Schedule.
48	Bar joist. See Structural.
52	Galvanized metal roof deck. See Structural.
54	Steel angle. See Structural.
60	Steel plate with headed studs. See Structural.
68	1/2" exterior plywood sheathing.
69	Thru-wall metal roof scupper for roof drainage. See Specification 077100 Roof Specialties.
90	Fully adhered TPO membrane roofing installed per manufacturer's written instructions. See Specification 075423 Thermoplastic Polyolefin (TPO) Roofing.
110	Sealant with backer rod.
112	Painted 1/2" gypsum board on 2x6 wood studs at 16" o.c. with kraft-face R-20 batt insulation (kraft in contact with gypsum board). See Details.
113	Fluid applied vapor permeable air barrier. See Specification 072726 Fluid Applied Membrane Air Barrier.
124	6" metal structural C-stud framing at 16" o.c. with R-20 batt insulation.
128	Painted smooth-face 8" concrete-filled "U" block bond beam. Condition varies. See Structural.
129	"H" clips at mid-span on standing seam metal roof.
131	5/8" pressure treated plywood decking. See Structural.

Keynote Schedule

Tag	Text
141	3/4" tongue and groove plywood on 2x10 wood joists @ 12" o.c. Provide R-38 batt kraft face insulation in between joists. Kraft face in contact with substrate. (If applicable, it shall be the Contractor's option to provide plywood attached to bottom of joists for insulation to rest on or secure insulation to joists without the need for the plywood bottom).
181	1x wood blocking.
205	1 layer of 1/2" painted gypsum board on both sides of 2"x6" wood studs at 16" o.c. Infill with kraft-faced R-20 batt insulation. Kraft in contact with gypsum board.
242	2x pressure treated wood top plate. Use barrier to prevent corrosion between wood and metal.
255	2x pressure treated wood blocking. Use barrier to prevent corrosion between wood and metal.
262	2x pressure treated painted wood fascia.
265	TPO membrane turned vertically up the wall and fastened to wood blocking at top roof curb, or top of wall framing per detail. Adhere TPO membrane to wall substrate with manufacturer approved bonding adhesive.
278	Prefinished metal ridge/hip cap by metal roofing manufacturer.
284	Cut edge sealant at TPO roof membrane flashing.
285	Hot air weld at TPO membrane and membrane flashing.
286	Fastener and seam fastening plate.
294	Polyisocyanurate insulation board (See TPO Spec for required R-value). Provide ½" cover board, mechanically fastened, over the top of insulation in locations where membrane roofing is to be applied.
314	Field cut seam and form pan around eave flashing.
315	Eave flashing with drip edge.
316	Painted soffit. Provide paintable PVC jointer between soffit panels fastened to pressure treated wood blocking. See specification section 074293.
318	Painted preformed EIFS cornice and trim, See Specification Section 072400 EIFS Exterior Insulation and Finish System.
322	Vapor permeable air and water resistive barrier membrane. See Specification Section 072400 EIFS Exterior Insulation and Finish System.
323	Unpainted smooth-face CMU (bond beam where indicated; see Structural). See Specification 042200 Concrete Unit Masonry.
324	Cold-formed metal stud trusses, see Structural.
325	3/4" pressure treated plywood.
326	C channel running continuously within metal deck flute to support metal deck at wall locations. See Structural.
331	Provide 42" guards at all exposed edges of above ceiling platforms. Concentrated Load: Guards shall be designed to resist a concentrated load of 200 pounds in accordance with Section 4.5.1 of ASCE/SEI 7. Uniform Load: Guards shall be designed to resist a linear load of 50 pounds per linear foot in accordance with Section 4.5.1.1 of ASCE/SEI 7. This load need not be assumed to act concurrently with the concentrated load specified above. Guard infill components except the top rail shall be designed to resist a concentrated load of 50 pounds in accordance with Section 4.5.1.2 of ASCE/SEI 7.
343	Self-adhered high-temperature SBS-modified roof underlayment (SBTM D36)
344	Rigid polyiso roof insulation. See specifications for insulation R-Vaule.

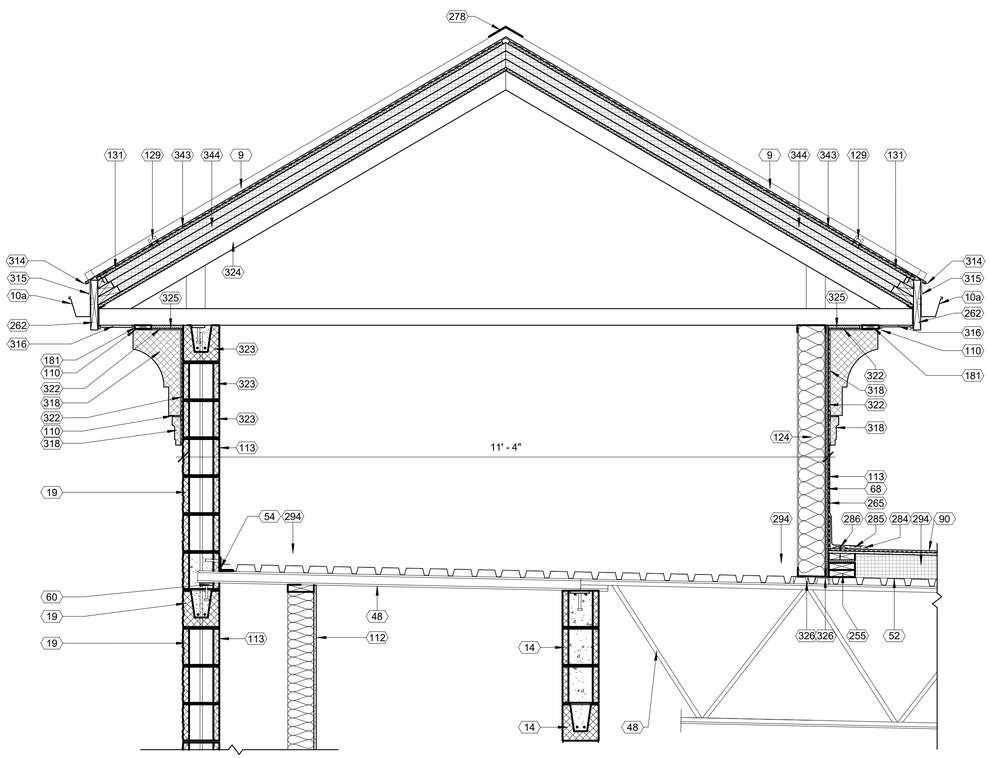

2 DT_Sheet A304_Single Building_Section Thru Rear Entry Tower
3/4" = 1'-0"

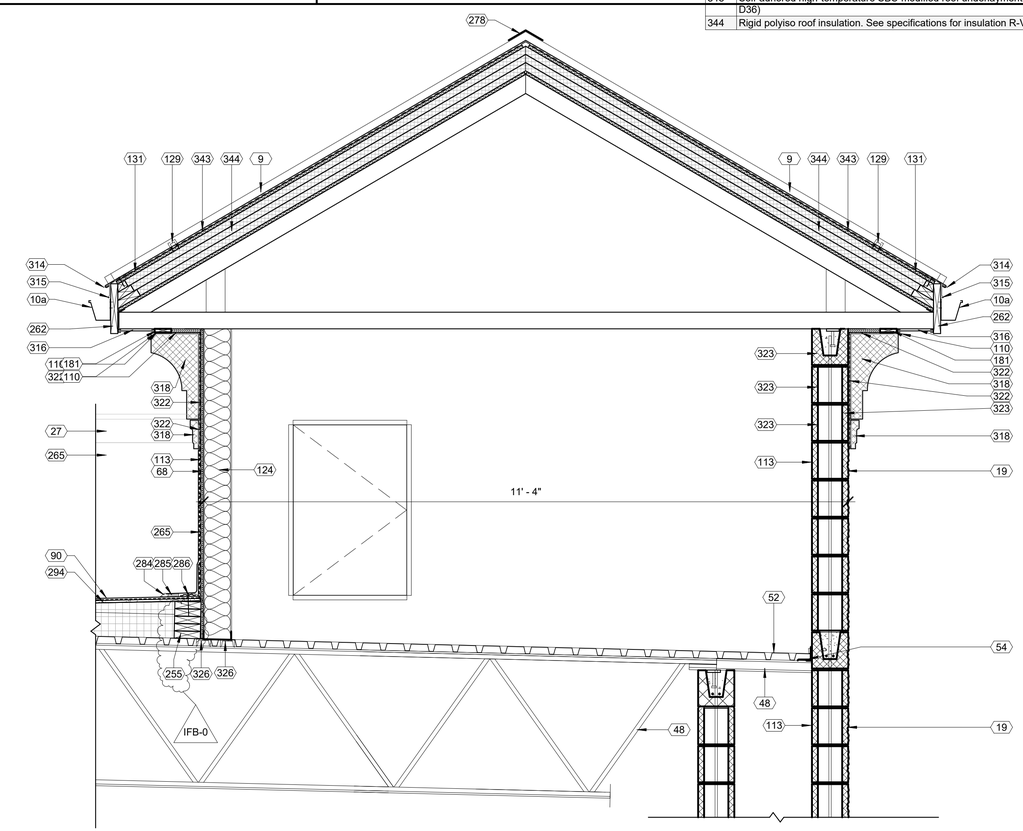

3 DT_Sheet A304_Single Building_Section Thru False Entry Tower
3/4" = 1'-0"

AHO ARCHITECTS, LLC

www.ahoarch.com

REGISTERED ARCHITECT
TIMOTHY A. AHO
25347
STATE OF TEXAS
08/12/2026

Express Oil Change & Tire Engineers

Single Building / Right Hand Oil Change / Rear Enter / Side Tire Storage

Cross Roads, Texas (Aubrey)

FINAL

No.	Description	Date
IFP-0	Issue for permit	06/30/2026
IFB-0	Iss. for Bid / AHJ Rev.	08/12/2026

© 2026 Aho Architects, LLC.
All Rights Reserved.

Wall Sections and Details

Project number	26013
Date	06/30/2026
Drawn by	ARC
Checked by	N/A

A304

Scale As indicated

9/1/2026 1:42:20 PM

E1

Refer to structural drawings for reinforcing and other information

Install all waterproofing per manufacturer's recommendations.

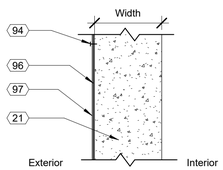

Wall Type No.	Description	Width	Ref Test
E1	As shown	See Struct.	-

E2

Contractor's Option: In lieu of wood framing as shown at the top of the parapet on the detail, Contractor may use Tremco's Pre-buck Engineered Framing System to construct parapet cap.

Refer to structural drawings for reinforcing, grouting, and other information

Install siloxane on the exterior side of wall construction

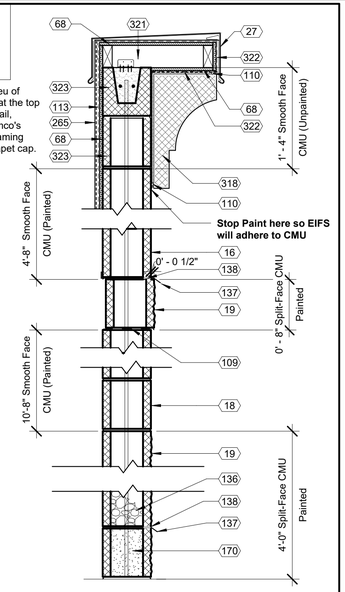

Wall Type No.	Description	Width	Ref Test
E2	As shown	7 5/8"	-

E3

Refer to structural drawings for reinforcing and other information

Install siloxane on the exterior side of wall construction

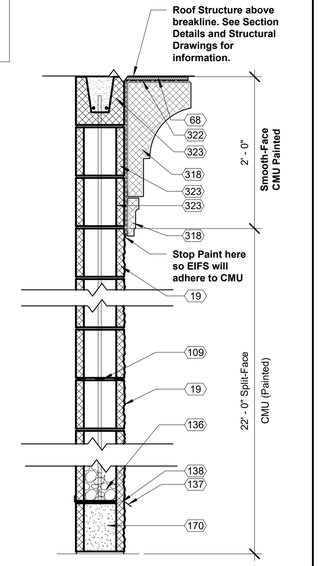

Wall Type No.	Description	Width	Ref Test
E3	As shown	7 5/8"	-

E5

Refer to structural drawings for reinforcing, grouting, and other information

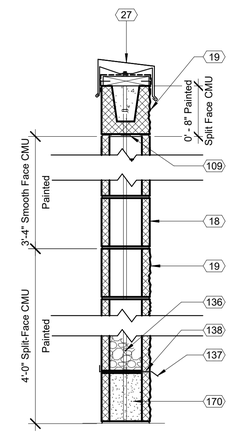

Wall Type No.	Description	Width
E5	As shown	7 5/8"
E5a	As shown, except without coping and painted CMU to roof. See Elevations on A101.	7 5/8"

I1

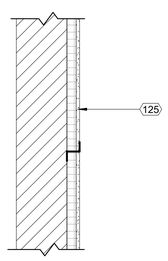

Wall Type No.	Description	Width	Ref Test
I1	As shown	2"	-

I2

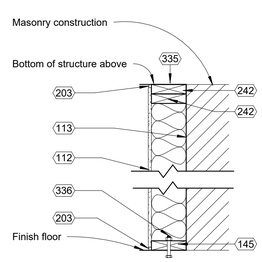

Wall Type No.	Description	Width	Ref Test
I2	As shown	6"	-

I3

Note: Stagger electrical outlet boxes, switches, etc. Seal around all penetrations in wall with acoustical sealant.

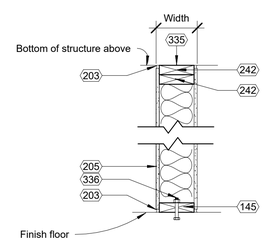

Wall Type No.	Description	Width	Ref Test
I3	As shown	6 1/2"	-
I3a	As shown, except extend only 6" above lay-in ceiling in lieu of extending to bottom of structure above	6 1/2"	
I3b	As shown, except extend 42" above platform in lieu of extending to bottom of structure above	6 1/2"	

I4

Refer to structural drawings for reinforcing and other information

Seal all pentrations with fire caulk

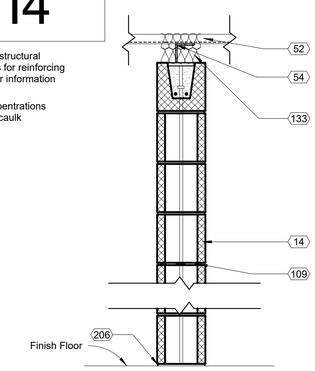

Wall Type No.	Description	Width	Ref Test
I4	As shown - Full Height	7 5/8"	U905/U305

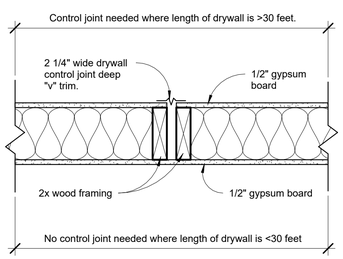

1 DT_Sheet A400_Gypsum Board Control Joint
1 1/2" = 1'-0"

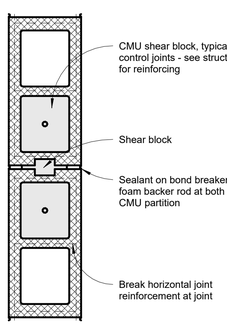

2 DT_Sheet A400_Masonry Control Joint
1 1/2" = 1'-0"

*Detail also applies to inside corners of masonry where indicated on the exterior elevations

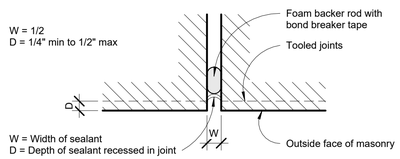

3 DT_Sheet A400_Sealant Detail
6" = 1'-0"

Keynote Schedule

Tag	Text
14	Painted smooth-face CMU (bond beam where indicated; see Structural). See Specification 042200 Concrete Unit Masonry. Color as indicated on Finish Schedule.
16	Painted smooth-face CMU. See Specification 042200 Concrete Unit Masonry. Color as indicated on Finish Schedule.
18	Painted smooth-face CMU. See Specification 042200 Concrete Unit Masonry. Color as indicated on Finish Schedule.
19	Painted split-face CMU (bond beam where indicated; see Structural). See Specification 042200 Concrete Unit Masonry. Color as indicated on Finish Schedule. Project 1/2" where indicated on details.
21	Cast-in-place concrete wall. See Structural. Membrane waterproofing at perimeter of foundation wall as specified. See Specification 334600 Subdrainage.
27	Pre-finished metal coping at exposed tops only over self-adhered membrane flashing and pressure treated wood blocking. Slope to drain. Color as indicated on Finish Schedule.
52	Galvanized metal roof deck. See Structural.
54	Steel angle. See Structural.
68	1/2" exterior plywood sheathing.
94	Fasteners at 12" max o.c. for securing subdrainage to pit wall. Follow manufacturer's installation instructions.
96	CCW MiraClay woven geotextile against wall/slab.
97	CCW MiraDrain 6200.
109	Horizontal joint reinforcement at 16" o.c. vertical.
110	Sealant with backer rod.
112	Painted 1/2" gypsum board on 2x6 wood studs at 16" o.c. with kraft-face R-20 batt insulation (kraft in contact with gypsum board). See Details.
113	Fluid applied vapor permeable air barrier. See Specification 072726 Fluid Applied Membrane Air Barrier.
125	1/2" painted gypsum board over rigid insulation secured to z-clips over 8" smooth-face CMU.
133	Firestop safing.

Keynote Schedule

Tag	Text
136	Pea gravel above through wall flashing.
137	Flashing between first and second course to utilize BlockFlash in addition to the pea gravel specified. Provide a drainage mat in open masonry cell directly above the BlockFlash pan.
138	Drainable weeps at every third mortar joint.
145	2x pressure treated wood sill plate.
170	Fill first course of CMU with grout.
203	Acoustical sealant and backer rod. See Specification 079219 Acoustical Joint Sealants.
205	1 layer of 1/2" painted gypsum board on both sides of 2"x6" wood studs at 16" o.c. Infill with kraft-faced R-20 batt insulation. Kraft in contact with gypsum board.
206	Fire caulk both sides. Typical. See Specification 078443 Joint Firestopping.
242	2x pressure treated wood top plate. Use barrier to prevent corrosion between wood and metal.
265	TPO membrane turned vertically up the wall and fastened to wood blocking at top roof curb, or top of wall framing per detail. Adhere TPO membrane to wall substrate with manufacturer approved bonding adhesive.
318	Painted preformed EIFS cornice and trim, See Specification Section 072400 EIFS Exterior Insulation and Finish System.
321	2x pressure treated wood framing spaced at 2'-0" o.c., minimum. Anchor 2x framing into grouted masonry cells using Simpson Strong Tie A23 angle ties. Secure angle ties on each side of framing members using 4 concrete screws on each side.
322	Vapor permeable air and water resistive barrier membrane. See Specification Section 072400 EIFS Exterior Insulation and Finish System.
323	Unpainted smooth-face CMU (bond beam where indicated; see Structural). See Specification 042200 Concrete Unit Masonry.
335	Use barrier like felt, butyl tape, polyethylene, etc. anywhere pressure treated wood is in contact with metal.
336	Titen anchor, powder actuated fastener, or anchor bolt as directed by the Structural Engineer.

AHO ARCHITECTS, LLC
www.ahoarch.com

REGISTERED ARCHITECT TIMOTHY A. AHO 25347 STATE OF TEXAS
08/12/2026

Express Oil Change & Tire Engineers

Single Building / Right Hand Oil Change / Rear Enter / Side Tire Storage

Cross Roads, Texas (Aubrey)

FINAL

No.	Description	Date
IFP-0	Issue for permit	06/30/2026
IFB-0	Iss. for Bid / AHJ Rev.	08/12/2026

© 2026 Aho Architects, LLC. All Rights Reserved.

Wall Types

Project number	26013
Date	06/30/2026
Drawn by	ARC
Checked by	N/A

A400

Scale As indicated

9/1/2026 1:42:22 PM

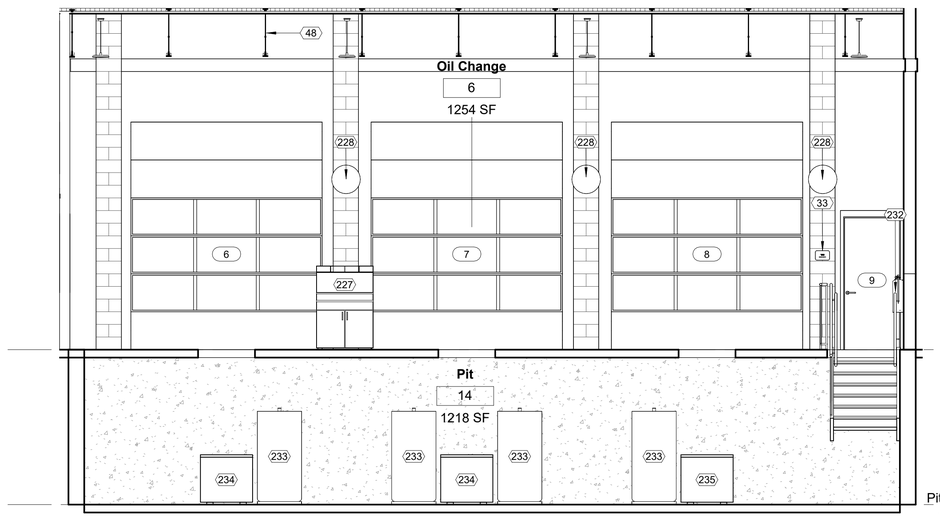

1 Oil Change_Interior Elevation A
1/4" = 1'-0"

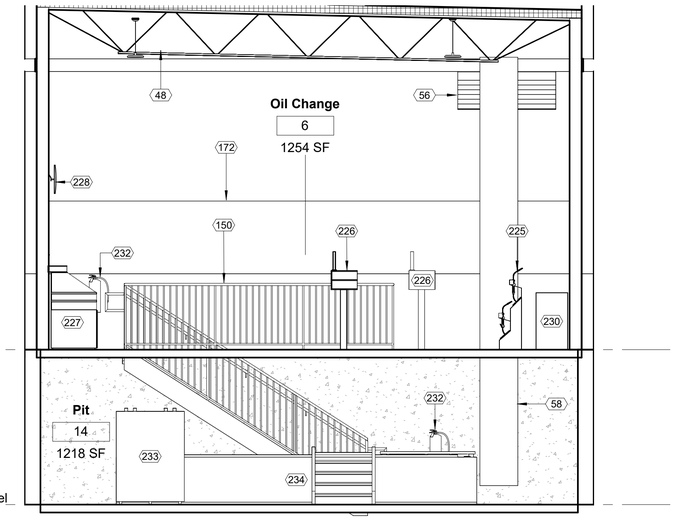

2 Oil Change_Interior Elevation B
1/4" = 1'-0"

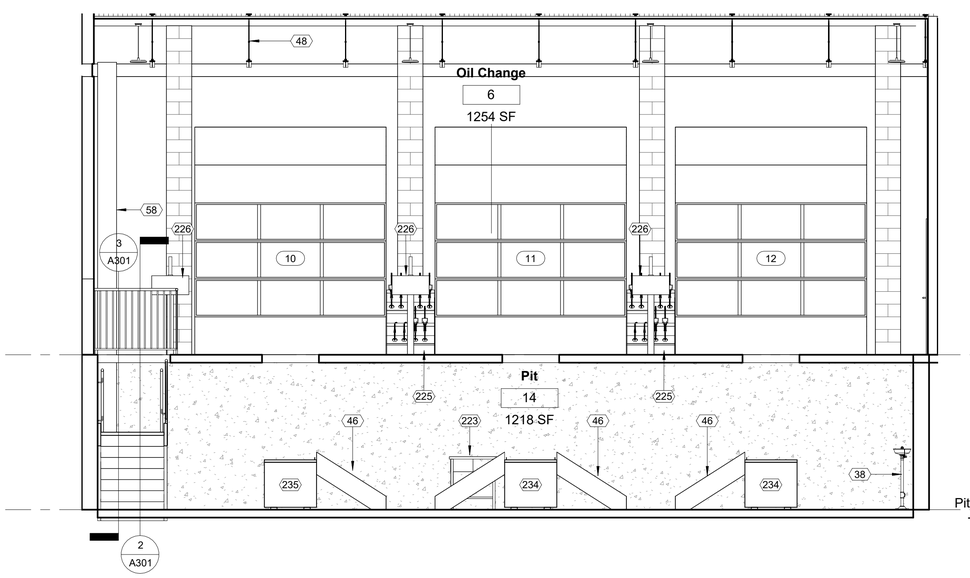

3 Oil Change_Interior Elevation C
1/4" = 1'-0"

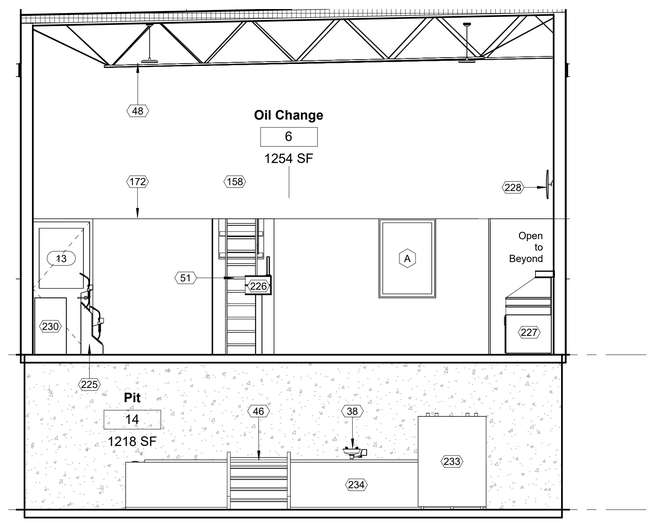

4 Oil Change_Interior Elevation D
1/4" = 1'-0"

Keynote Schedule

Tag	Text
33	ADA compliant room / exit sign. See Details.
38	Eyewash station. See Plumbing.
46	Oil tank stairs (By Others).
48	Bar joist. See Structural.
51	Attic access ladder.
56	Metal louver or vent. Color to match adjacent surface. See Mechanical.
58	Verify location and size of pit exhaust opening with Structural and Mechanical drawings.
150	Painted guardrail with painted 1/2" round pickets at 4" max o.c. See Finish Schedule for color. See Specification 055213 Pipe and Tube Railings.
158	Vinyl letters (By Others).
172	Ensure paint line occurs at top of door and window frames. Ensure all openings, alcoves and windows align with top of door frame. Typical in Oil and Service Bays.
223	Work bench (By Others).
225	Lube console (By Others).
226	Computer podium (By Others).
227	Cashier computer station (By Others). Clear opening for cashier computer station must be 38 ½" wide minimum. No Exceptions.
228	Convex mirrors (By Others).
230	Tool cart (By Others).
232	Bracket mounted fire extinguisher. See Specification Section 104416 Fire Extinguishers. Provide sign at all fire extinguisher locations which may be visually obstructed. See Details.
233	275-gallon Class IIIB new oil tank (By Others).
234	928-gallon Class IIIB new oil tank (By Others). Provide a 2" concrete walkway cap with non-slip surface over (oil tank By Others). Coordinate with equipment supplier prior to installation.
235	928-gallon Class IIIB waste oil tank (By Others). Provide a 2" concrete walkway cap with non-slip surface over (oil tank By Others). Coordinate with equipment supplier prior to installation.

AHO ARCHITECTS, LLC
www.ahoarch.com

REGISTERED ARCHITECT
TIMOTHY A. AHO
25347
STATE OF TEXAS
08/12/2026

Express Oil Change & Tire Engineers

Single Building / Right Hand Oil Change / Rear Enter / Side Tire Storage

Cross Roads, Texas (Aubrey)

FINAL

No.	Description	Date
IFP-0	Issue for permit	06/30/2026
IFB-0	Iss. for Bid / AHJ Rev.	08/12/2026

© 2026 Aho Architects, LLC.
All Rights Reserved.

Interior Elevations

Project number	26013
Date	06/30/2026
Drawn by	ARC
Checked by	N/A

A600

Scale 1/4" = 1'-0"

9/1/2026 1:42:24 PM

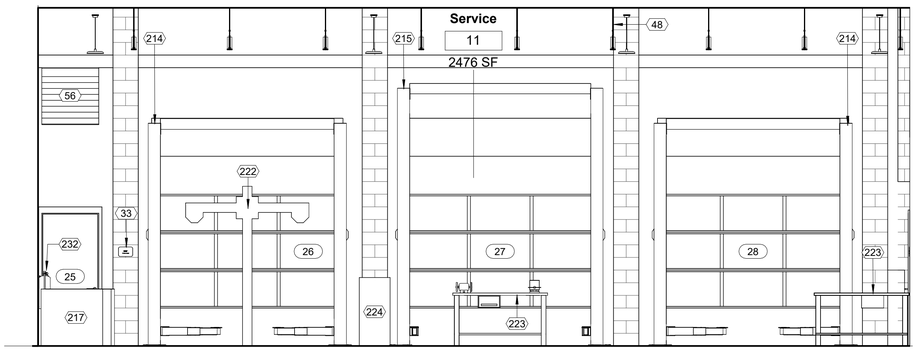

1 Service Bay_Interior Elevation A
1/4" = 1'-0"

F.F.
0' - 0"

F.F.
0' - 0"

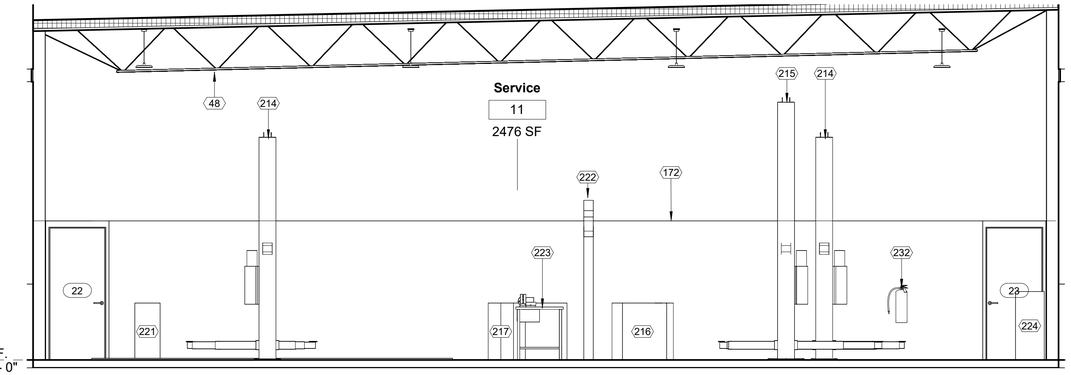

2 Service Bay_Interior Elevation D
1/4" = 1'-0"

Keynote Schedule	
Tag	Text
33	ADA compliant room / exit sign. See Details.
48	Bar joist. See Structural.
56	Metal louver or vent. Color to match adjacent surface. See Mechanical.
158	Vinyl letters (By Others).
172	Ensure paint line occurs at top of door and window frames. Ensure all openings, alcoves and windows align with top of door frame. Typical in Oil and Service Bays.
214	10K Lift (By Others).
215	12K Lift (By Others).
216	Tire changer (By Others).
217	Wheel balancer (By Others).
220	Scissor lift alignment (By Others).
221	Scissor lift alignment console (By Others). Provide conduit in slab as required. See alignment lift specifications (By Others).
222	Alignment scarecrow (By Others).
223	Work bench (By Others).
224	Strut compressor (By Others).
232	Bracket mounted fire extinguisher. See Specification Section 104416 Fire Extinguishers. Provide sign at all fire extinguisher locations which may be visually obstructed. See Details.

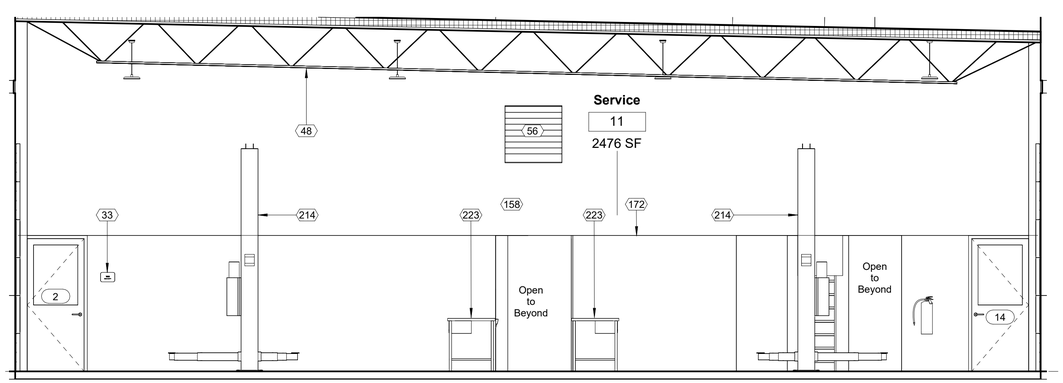

F.F.
0' - 0"

5 Service Bay_Interior Elevation B
1/4" = 1'-0"

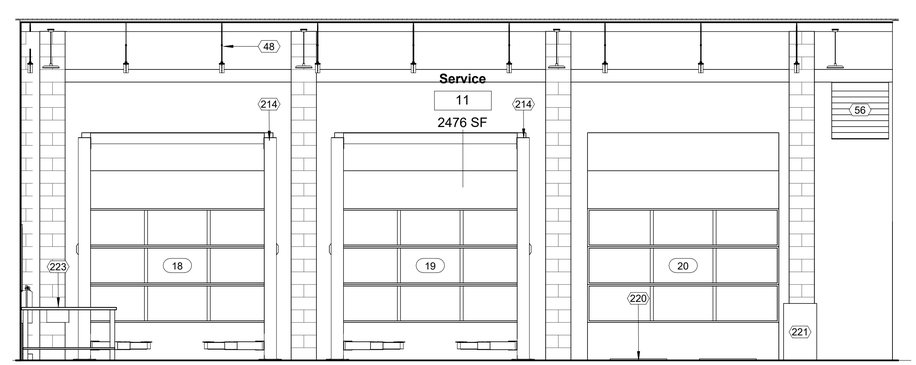

F.F.
0' - 0"

6 Service Bay_Interior Elevation C
1/4" = 1'-0"

AHO ARCHITECTS, LLC
www.ahoarch.com

REGISTERED ARCHITECT
TIMOTHY A. AHO
25347
STATE OF TEXAS
08/12/2026

Express Oil Change & Tire Engineers

Single Building / Right Hand Oil Change / Rear Enter / Side Tire Storage

Cross Roads, Texas (Aubrey)

FINAL

No.	Description	Date
IFP-0	Issue for permit	06/30/2026
IFB-0	Iss. for Bid / AHJ Rev.	08/12/2026

© 2026 Aho Architects, LLC.
All Rights Reserved.

Interior Elevations

Project number	26013
Date	06/30/2026
Drawn by	ARC
Checked by	N/A

A601

Scale 1/4" = 1'-0"

9/1/2026 1:42:26 PM

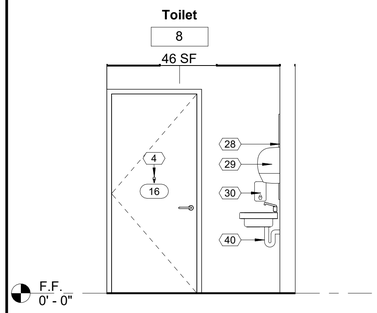

1 Toilet #8_Interior Elevation A
3/8" = 1'-0"

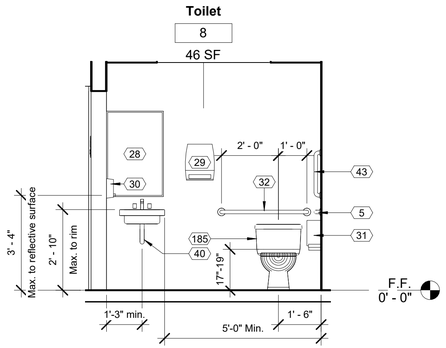

2 Toilet #8_Interior Elevation B
3/8" = 1'-0"

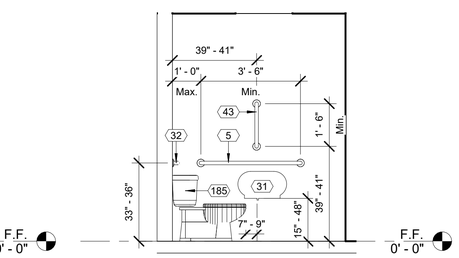

3 Toilet#8_Interior Elevation C
3/8" = 1'-0"

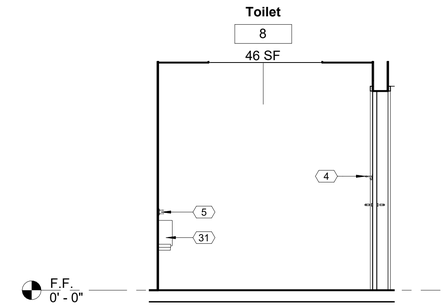

4 Toilet #8_Interior Elevation D
3/8" = 1'-0"

Keynote Schedule	
Tag	Text
3	Location of 30" wide refrigerator (By Others).
4	Robe hook mounted at 48" A.F.F. See Specification 102800 Toilet, Bath, and Laundry Accessories.
5	42" grab bar with blocking in walls as required. See Specification 102800 Toilet, Bath, and Laundry Accessories.
28	Framed mirror. See Specification 102800 Toilet, Bath, and Laundry Accessories.
29	Automatic Towel Dispenser (By others). Provide blocking in wall as required. See Specification 102800 Toilet, Bath, and Laundry Accessories.
30	Wall mounted soap dispenser (By Others). Provide blocking in wall as required. See Specification 102800 Toilet, Bath, and Laundry Accessories.
31	Jumbo Dual Roll Toilet Tissue dispenser (By Others). Provide blocking in wall as required. See Specification 102800 Toilet, Bath, and Laundry Accessories.
32	36" grab bar with blocking in walls as required. See Specification 102800 Toilet, Bath, and Laundry Accessories.
36	Surface mounted baby changing station with blocking in walls as required. See Specification 102800 Toilet, Bath, and Laundry Accessories.
40	Under lavatory guard. See Specification 102800 Toilet, Bath, and Laundry Accessories.
43	24" vertical grab bar with blocking in walls as required. See Specification 102800 Toilet, Bath, and Laundry Accessories.
111	Aluminum storefront with insulated glazing. See Details.
134	Plastic laminate over ½" plywood on 2x wood framing. Align with vertical mullions. Adhere plastic laminate to all four sides
179	Plastic laminate over 1x wood blocking. See Specification 123623.13 Plastic-Laminate-Clad Countertops. See Finish Schedule for color.
180	Plastic laminate over 3/4" plywood. See Specification 123623.13 Plastic-Laminate-Clad Countertops. See Finish Schedule for color.
181	1x wood blocking.
182	Concealed countertop bracket.
183	2x wood cleat.
184	Finish base. See Specification Section 096513 Resilient Base Accessories. See Finish Schedule for color.
185	Flush valve on transfer side of water closet.

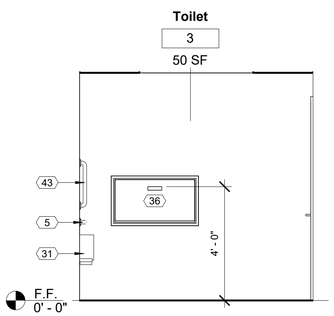

5 Toilet #3_ Interior Elevation A
3/8" = 1'-0"

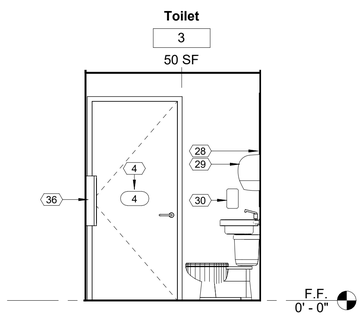

6 Toilet #3_Interior Elevation B
3/8" = 1'-0"

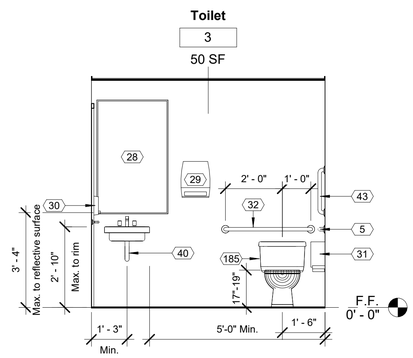

7 Toilet #3_Interior Elevation C
3/8" = 1'-0"

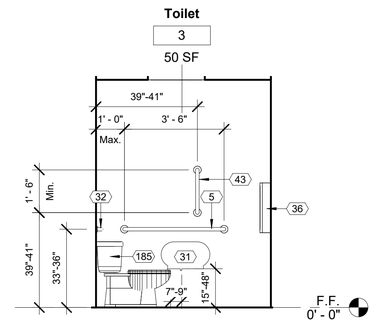

8 Toilet #3_Interior Elevation D
3/8" = 1'-0"

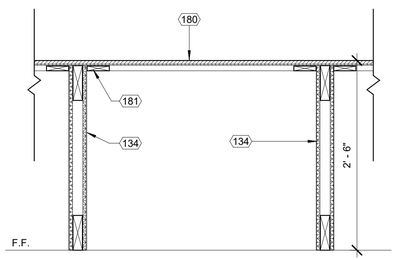

9 DT_Sheet A602_Countertop Section Detail
1" = 1'-0"

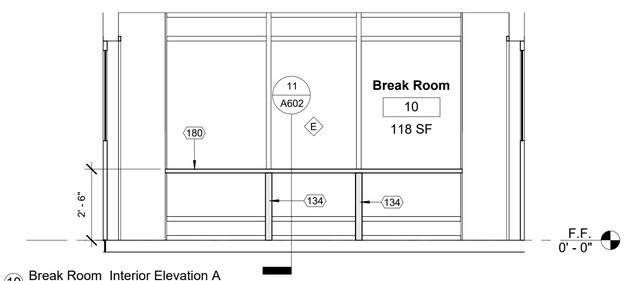

10 Break Room_Interior Elevation A
3/8" = 1'-0"

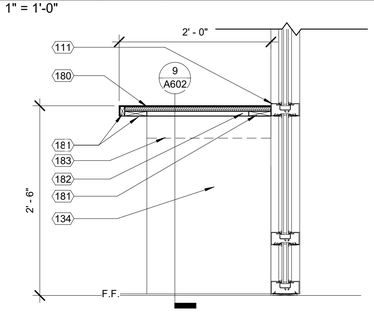

11 DT_Sheet A602_Countertop Section @ Storefront
1" = 1'-0"

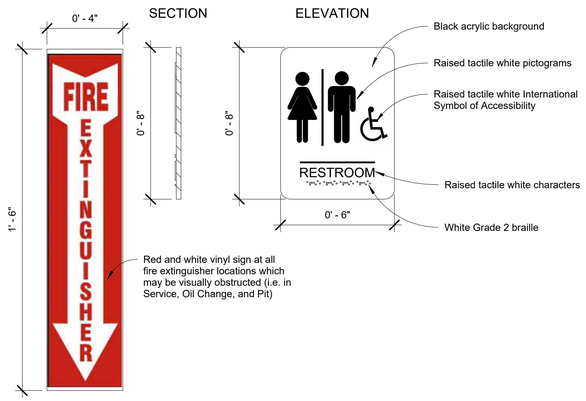

12 DT_Sheet A602_Signage
3" = 1'-0"

Signage shall comply with Section 703 of the 2017 ICC/ANSI A117.1

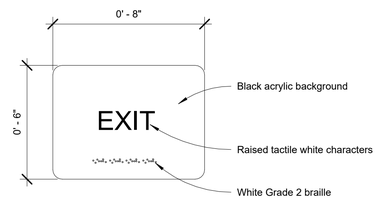

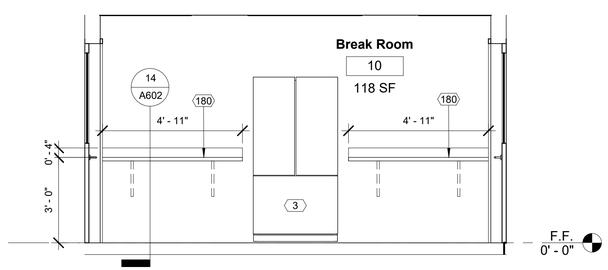

13 Break Room_Interior Elevation B
3/8" = 1'-0"

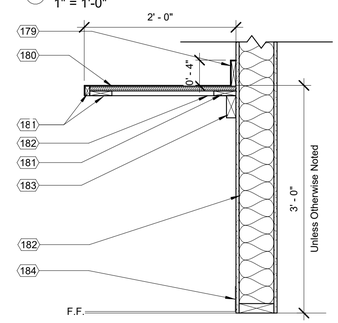

14 DT_Sheet A602_Countertop Section @ Wall
1" = 1'-0"

AHO ARCHITECTS, LLC
www.ahoarch.com

REGISTERED ARCHITECT
TIMOTHY A. AHO
25347
STATE OF TEXAS
08/12/2026

Express Oil Change & Tire Engineers

Single Building / Right Hand Oil Change / Rear Enter / Side Tire Storage

Cross Roads, Texas (Aubrey)

FINAL

No.	Description	Date
IFP-0	Issue for permit	06/30/2026
IFB-0	Iss. for Bid / AHJ Rev.	08/12/2026

© 2026 Aho Architects, LLC. All Rights Reserved.

Interior Elevations

Project number	26013
Date	06/30/2026
Drawn by	ARC
Checked by	N/A

A602

Scale As indicated

9/1/2026 1:42:28 PM

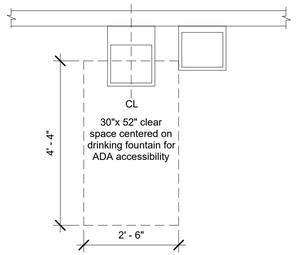

1 DT_Sheet A605_Drinking Fountain_Plan View
1/2" = 1'-0"

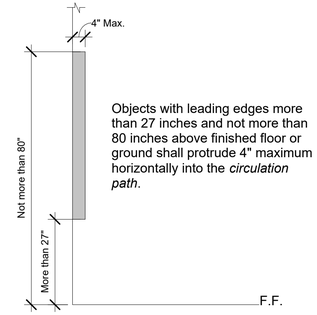

2 DT_Sheet A605_Limits of Protruding Objects
1/2" = 1'-0"

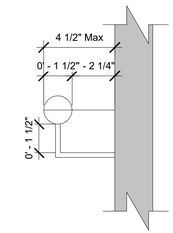

3 DT_Sheet A605_Handrail Detail
3" = 1'-0"

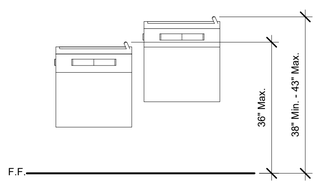

4 DT_Sheet A605_Drinking Fountain_Front View
1/2" = 1'-0"

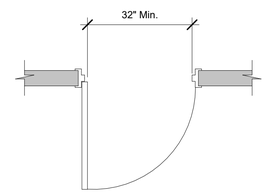

5 DT_Sheet A605_Clear Width @ Doorways
1/2" = 1'-0"

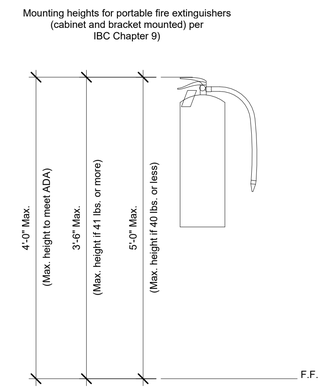

6 DT_Sheet A605_Fire Extinguisher Mounting Heights
1" = 1'-0"

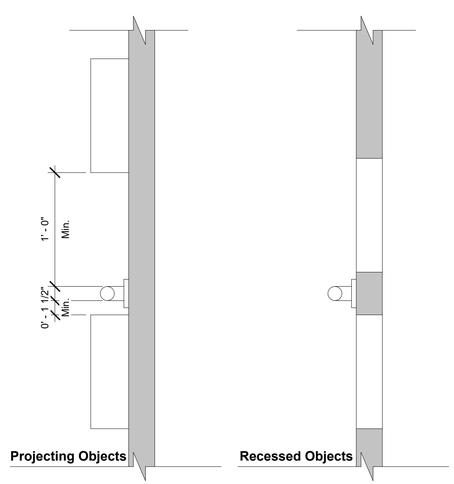

7 DT_Sheet A605_Spacing of Grab Bars
1 1/2" = 1'-0"

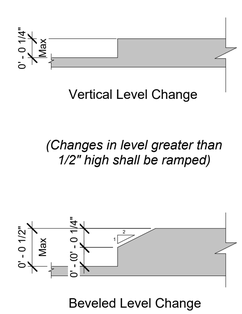

8 DT_Sheet A605_Level Change
12" = 1'-0"

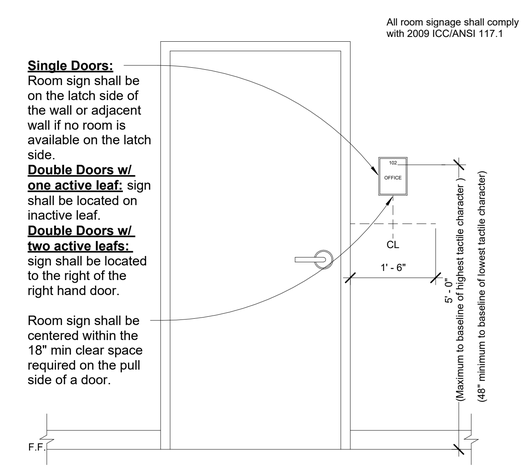

9 DT_Sheet A605_Signage Mounting Heights
3/4" = 1'-0"

AHO ARCHITECTS, LLC
www.ahoarch.com

REGISTERED ARCHITECT
TIMOTHY A. AHO
25347
STATE OF TEXAS
08/12/2026

Express Oil Change & Tire Engineers

Single Building / Right Hand Oil Change / Rear Enter / Side Tire Storage

Cross Roads, Texas (Aubrey)

FINAL

No.	Description	Date
IFP-0	Issue for permit	06/30/2026
IFB-0	Iss. for Bid / AHJ Rev.	08/12/2026

© 2026 Aho Architects, LLC. All Rights Reserved.

Interior Dimensional Info.

Project number	26013
Date	06/30/2026
Drawn by	ARC
Checked by	N/A

A605

Scale As indicated

9/1/2026 1:42:29 PM

FLOOR FINISH LEGEND

Sealed Concrete

Stonhard Flooring (By Others)

Safety Yellow Paint.

Luxury Vinyl Tile (LVT)

Keynote Schedule	
Tag	Text
41	Paint structural steel at openings P-5 Safety Yellow. Typical for all pit and stairwell openings.
55	Stainless steel corner guard. See Specification 102600 Wall and Door Protection.
187	Paint 12" P-5 Safety Yellow around pit openings. Verify paint is compatible with floor finish.
327	Reducer strip.

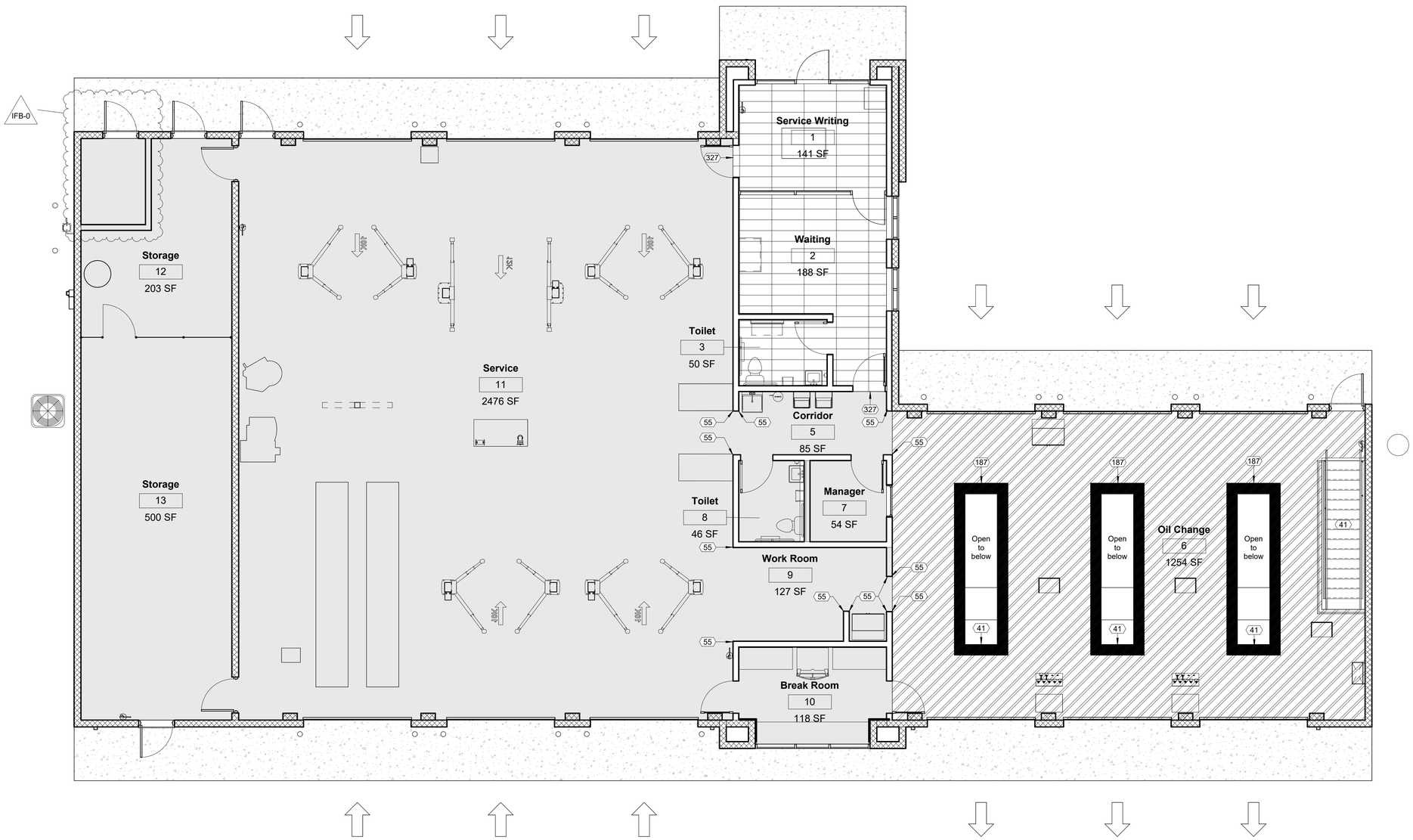

2 07_Floor Finish Plan_Main
3/16" = 1'-0"

AHO ARCHITECTS, LLC

www.ahoarch.com

REGISTERED ARCHITECT TIMOTHY A. AHO 25347 STATE OF TEXAS

08/12/2026

Express Oil Change & Tire Engineers

Single Building / Right Hand Oil Change / Rear Enter / Side Tire Storage

Cross Roads, Texas (Aubrey)

FINAL

No.	Description	Date
IFP-0	Issue for permit	06/30/2026
IFB-0	Iss. for Bid / AHJ Rev.	08/12/2026

© 2026 Aho Architects, LLC. All Rights Reserved.

Floor Finishes - Main

Project number	26013
Date	06/30/2026
Drawn by	ARC
Checked by	N/A

A610

Scale As indicated

9/1/2026 1:42:31 PM

FLOOR FINISH LEGEND

Sealed Concrete

Stonhard Flooring (By Others)

Safety Yellow Paint.

Luxury Vinyl Tile (LVT)

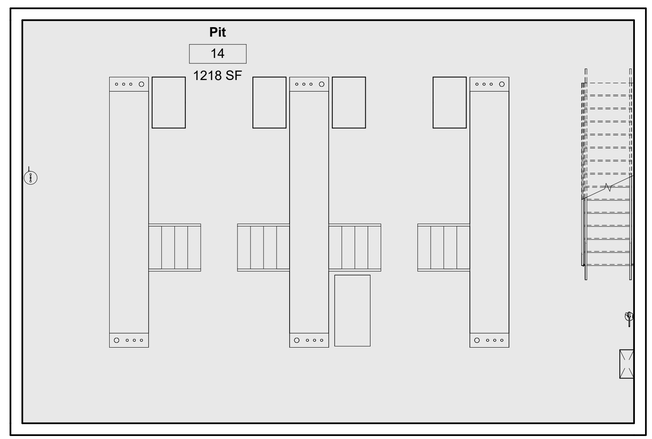

1 06_Floor Finish Plan_Pit
3/16" = 1'-0"

AHO ARCHITECTS, LLC

www.ahoarch.com

REGISTERED ARCHITECT
TIMOTHY A. AHO
25347
STATE OF TEXAS
08/12/2026

Express Oil Change & Tire Engineers

Single Building / Right Hand Oil Change / Rear Enter / Side Tire Storage

Cross Roads, Texas (Aubrey)

FINAL

No.	Description	Date
IFP-0	Issue for permit	06/30/2026
IFB-0	Iss. for Bid / AHJ Rev.	08/12/2026

© 2026 Aho Architects, LLC.
All Rights Reserved.

Floor Finishes - Pit

Project number	26013
Date	06/30/2026
Drawn by	ARC
Checked by	N/A

A611

Scale As indicated

9/1/2026 1:42:31 PM

Door and Frame Schedule

Number	Door						Frame			Glass	UL Label	Notes
	Width	Height	Thickness	Door Type	Door Material	Door Finish	Frame Type	Frame Material	Frame Finish			
1	3' - 0"	7' - 0"	0' - 1 3/4"	SF	Aluminum / Glass	Factory Finish	3	Aluminum	Factory Finish	Tempered		If required by the Fire Marshal or AHJ, add lettering that reads, "This door must remain unlocked when business is occupied."
2	3' - 0"	7' - 0"	0' - 1 3/4"	FV	Wood / Glass	Painted	1	Hollow Metal	Painted	Tempered		
3	3' - 0"	7' - 0"	0' - 1 3/4"	SF	Aluminum / Glass	Factory Finish	3	Aluminum	Factory Finish	Tempered		
4	3' - 0"	7' - 0"	0' - 1 3/4"	F	Wood	Painted	1	Hollow Metal	Painted	N/A		
5	3' - 0"	7' - 0"	0' - 1 3/4"	FV	Wood / Glass	Painted	1	Hollow Metal	Painted	Tempered		
6	10' - 0"	12' - 0"	0' - 2 1/8"	OH	Metal / Glass	Factory Finish	N/A	N/A	Factory Finish	Tempered		
7	10' - 0"	12' - 0"	0' - 2 1/8"	OH	Metal / Glass	Factory Finish	N/A	N/A	Factory Finish	Tempered		
8	10' - 0"	12' - 0"	0' - 2 1/8"	OH	Metal / Glass	Factory Finish	N/A	N/A	Factory Finish	Tempered		
9	3' - 0"	7' - 0"	0' - 1 3/4"	F	Hollow Metal	Painted	2	Hollow Metal	Painted	N/A		
10	10' - 0"	12' - 0"	0' - 2 1/8"	OH	Metal / Glass	Factory Finish	N/A	N/A	Factory Finish	Tempered		
11	10' - 0"	12' - 0"	0' - 2 1/8"	OH	Metal / Glass	Factory Finish	N/A	N/A	Factory Finish	Tempered		
12	10' - 0"	12' - 0"	0' - 2 1/8"	OH	Metal / Glass	Factory Finish	N/A	N/A	Factory Finish	Tempered		
13	3' - 0"	7' - 0"	0' - 1 3/4"	FV	Wood / Glass	Painted	1	Hollow Metal	Painted	Tempered		
14	3' - 0"	7' - 0"	0' - 1 3/4"	FV	Wood / Glass	Painted	1	Hollow Metal	Painted	Tempered		
15	3' - 0"	7' - 0"	0' - 1 3/4"	FV	Wood / Glass	Painted	1	Hollow Metal	Painted	Tempered		
16	3' - 0"	7' - 0"	0' - 1 3/4"	F	Wood	Painted	1	Hollow Metal	Painted	N/A		
18	10' - 0"	12' - 0"	0' - 2 1/8"	OH	Metal / Glass	Factory Finish	N/A	N/A	Factory Finish	Tempered		
19	10' - 0"	12' - 0"	0' - 2 1/8"	OH	Metal / Glass	Factory Finish	N/A	N/A	Factory Finish	Tempered		
20	10' - 0"	12' - 0"	0' - 2 1/8"	OH	Metal / Glass	Factory Finish	N/A	N/A	Factory Finish	Tempered		
21	3' - 0"	7' - 0"	0' - 1 3/4"	F	Hollow Metal	Painted	2	Hollow Metal	Painted	N/A		
22	3' - 0"	7' - 0"	0' - 1 3/4"	F	Hollow Metal	Painted	2	Hollow Metal	Painted	N/A	45 Min.	Provide fire rated label on door and frame.
23	3' - 0"	7' - 0"	0' - 1 3/4"	F	Hollow Metal	Painted	2	Hollow Metal	Painted	N/A	45 Min.	Provide fire rated label on door and frame.
24	3' - 0"	7' - 0"	0' - 1 3/4"	F	Hollow Metal	Painted	2	Hollow Metal	Painted	N/A		
25	3' - 0"	7' - 0"	0' - 1 3/4"	F	Hollow Metal	Painted	2	Hollow Metal	Painted	N/A		
26	10' - 0"	12' - 0"	0' - 2 1/8"	OH	Metal / Glass	Factory Finish	N/A	N/A	Factory Finish	Tempered		
27	10' - 0"	12' - 0"	0' - 2 1/8"	OH	Metal / Glass	Factory Finish	N/A	N/A	Factory Finish	Tempered		
28	10' - 0"	12' - 0"	0' - 2 1/8"	OH	Metal / Glass	Factory Finish	N/A	N/A	Factory Finish	Tempered		
30	3' - 0"	7' - 0"	0' - 1 3/4"	F	Hollow Metal	Painted	2	Hollow Metal	Painted	N/A		

IFB-0

Note: Door #17 Intentionally Omitted

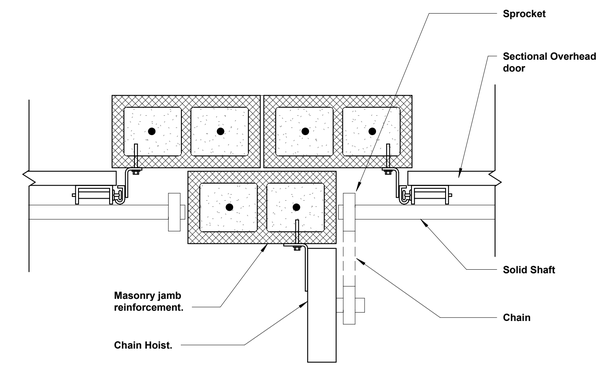

3 DT_Sheet A620_Chain Hoist Detail
1 1/2" = 1'-0"

WINDOW LEGEND

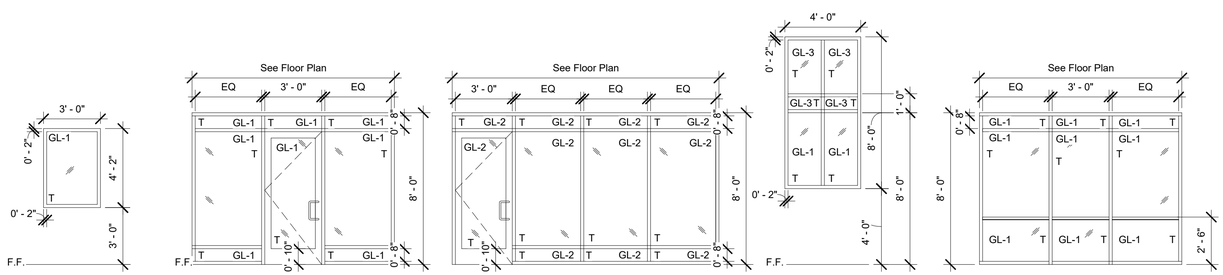

Window Type - A
Aluminum Storefront

Storefront Type - B
Aluminum Storefront

Storefront Type - C
Aluminum Storefront

Window Type - D
Aluminum Storefront

Storefront Type - E
Aluminum Storefront

DOOR AND FRAME LEGEND

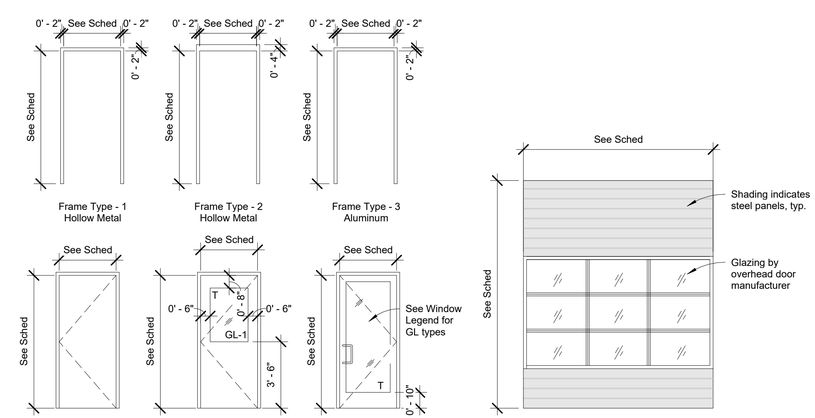

Frame Type - 1
Hollow Metal

Frame Type - 2
Hollow Metal

Frame Type - 3
Aluminum

Door Type - F
Flush Door

Door Type - FV
Flush with Vision Panel

Door Type - SF
Storefront

Door Type - OH
Overhead Sectional Door

NOTE: Refer to floor plan for direction of door swing.

AHO ARCHITECTS, LLC
www.ahoarch.com

REGISTERED ARCHITECT TIMOTHY A. AHO 25347 STATE OF TEXAS
08/12/2026

Express Oil Change & Tire Engineers

Single Building / Right Hand Oil Change / Rear Enter / Side Tire Storage

Cross Roads, Texas (Aubrey)

FINAL

No.	Description	Date
IFP-0	Issue for permit	06/30/2026
IFB-0	Iss. for Bid / AHJ Rev.	08/12/2026

© 2026 Aho Architects, LLC.
All Rights Reserved.

Schedules

Project number	26013
Date	06/30/2026
Drawn by	ARC
Checked by	N/A

A620

Scale As indicated

9/1/2026 1:42:32 PM

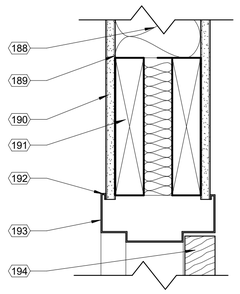

3 DT_Sheet A621_Door Head Detail_Wood
3" = 1'-0"

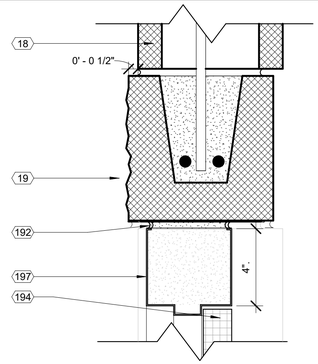

4 DT_Sheet A621_Door Head Detail_Masonry (Exterior)
3" = 1'-0"

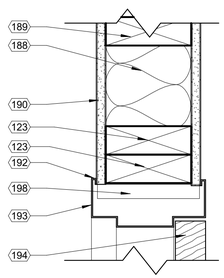

5 DT_Sheet A621_Door Jamb Detail_Wood
3" = 1'-0"

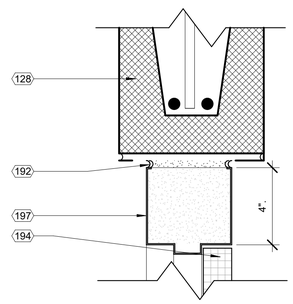

6 DT_Sheet A621_Door Head Detail_Masonry (Interior)
3" = 1'-0"

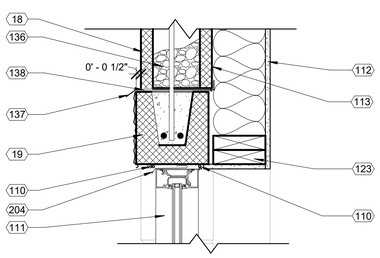

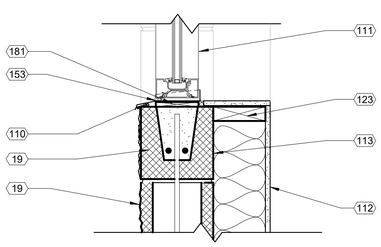

8 DT_Sheet A621_Storefront Window Head / Sill Detail_Masonry
1 1/2" = 1'-0"

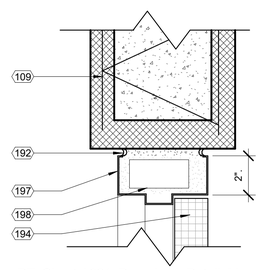

7 DT_Sheet A621_Door Jamb Detail_Masonry
3" = 1'-0"

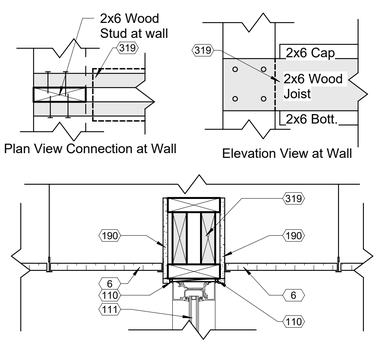

9 DT_Sheet A621_Wood Header @ Interior Storefront
1 1/2" = 1'-0"

Dover Gray is a Custom Color:

Deep Base				
CCE Colorant	OZ	32	64	128
W1 White	-	14	1	1
B1 Black	2	26	1	1
R2 Maroon	-	4	-	1
Y3 Deep Gold	-	17	1	1

Keynote Schedule

Tag	Text
6	Lay-in acoustical ceiling tile and grid, supported from structure.
18	Painted smooth-face CMU. See Specification 042200 Concrete Unit Masonry. Color as indicated on Finish Schedule.
19	Painted split-face CMU (bond beam where indicated; see Structural). See Specification 042200 Concrete Unit Masonry. Color as indicated on Finish Schedule. Project 1/2" where indicated on details.
109	Horizontal joint reinforcement at 16" o.c. vertical.
110	Sealant with backer rod.
111	Aluminum storefront with insulated glazing. See Details.
112	Painted 1/2" gypsum board on 2x6 wood studs at 16" o.c. with kraft-face R-20 batt insulation (kraft in contact with gypsum board). See Details.
113	Fluid applied vapor permeable air barrier. See Specification 072726 Fluid Applied Membrane Air Barrier.
123	Blocking. See Structural.
128	Painted smooth-face 8" concrete-filled "U" block bond beam. Condition varies. See Structural.
136	Pea gravel above through wall flashing.
137	Flashing between first and second course to utilize BlockFlash in addition to the pea gravel specified. Provide a drainage mat in open masonry cell directly above the BlockFlash pan.

Keynote Schedule

Tag	Text
138	Drainable weeps at every third mortar joint.
153	Aluminum sill flashing with end dams to match aluminum storefront framing.
181	1x wood blocking.
188	Kraft-faced batt insulation. Kraft in contact with gypsum board.
189	2x wood studs at 16" o.c.
190	1/2" painted gypsum board.
191	Double 2"x8" wood header.
192	Caulk all around on both sides.
193	Painted hollow metal frame with returns. See Finish Schedule for color.
194	Scheduled door. See plans for details.
197	Painted hollow metal frame, grouted solid.
198	Jamb anchors. Provide 3 per jamb.
204	Aluminum head flashing to match aluminum storefront framing.
319	Wood stud header at interior storefront. (4) 2x6 wood studs attached to extended wood stud at bearing wall. Extend wood stud in bearing wall up to roof deck. Brace as required.

Material Schedule

Abbreviation	Material Description	Manufacturer	Style Name or Number	Color (Description)	Size	Finish	Material Notes
ACT-1	Acoustical Ceiling Tile	Armstrong	1775 Dune	White	24"x24"	N/A	Suprafine XL 9/16" Exposed Tee Grid
P-1	Paint - Color 1	Sherwin Williams	See Paint Schedule on G202	SW6966 Blueblood	N/A	See Paint Schedule on G202	
P-2	Paint - Color 2	Sherwin Williams	See Paint Schedule on G202	Custom Color (Dover Gray)	N/A	See Paint Schedule on G202	
P-3	Paint - Color 3	Sherwin Williams	See Paint Schedule on G202	SW7669 Summit Gray	N/A	See Paint Schedule on G202	
P-4	Paint - Color 4	Sherwin Williams	See Paint Schedule on G202	SW6959 Bluechip	N/A	See Paint Schedule on G202	
P-5	Paint - Color 5	Sherwin Williams	See Paint Schedule on G202	Safety Yellow	N/A	See Paint Schedule on G202	
P-6	Paint - Color 6	Sherwin Williams	See Paint Schedule on G202	Safety Red	N/A	See Paint Schedule on G202	
P-7	Paint - Color 7	Sherwin Williams	See Paint Schedule on G202	SW7006 Extra White	N/A	See Paint Schedule on G202	
P-8	Paint - Color 8	Sherwin Williams	See Paint Schedule on G202	SW7075 Web Gray	N/A	See Paint Schedule on G202	
PL-1	Plastic Laminate - Color 1	Wilsonart	4880-38	Carbon Mesh	N/A	N/A	
RB	Rubber Base	Ropee	Pinnacle	669 Battleship	4"	N/A	
SC	Sealed Concrete	Sherwin Williams	See Paint Schedule on G202	Haze Gray	N/A	See Paint Schedule on G202	Add SharkGrip for added slip resistance
SH	StonHard Flooring	StonHard	N/A	N/A	N/A	N/A	Provided and installed by (Others)
FRP-1	Fiberglass Reinforced Panels	Marlite	4'x8' Textured Panels	P430N Medium Gray	4'x8'	Pebbled	
LVT	Lux. Vinyl Tile	Tarkett	Contour Mineral Basalt PCMB	4645 Paved Path	12"x36"		

Finish Schedule for Additional Items

1.	Doors & Frames: Paint P-3	9.	Keynote 16: P-1	17.	Door Hardware: Satin Chrome	25.	Dumpster Gate / Frame: P-3
2.	Bollards & Dumpster Posts: P-6	10.	Not Used.	18.	Window Gaskets: Light Gray	26.	Overhead Door: White
3.	Exterior Pole Sign: By others.	11.	Keynote 18: P-8	19.	Exterior Aluminum Storefront & Door: Clear Anodized	27.	Lintel at OH Doors: P-3
4.	Conductor Head / Downspouts: Match P-8	12.	Keynote 19: P-3	20.	Abrasive Nosing: Safety Yellow	28.	Countertop Carbon Mesh: PL-1
5.	Electrical covers to be brushed aluminum	13.	Knox Box: Aluminum	21.	Interior Aluminum Storefront & Door: Clear Anodized	29.	EIFS Cornice & Trim: P-1
6.	Paint all louvers to match adjacent finish	14.	Roof: White TPO	22.	Chair Rail: Stainless Steel by others	30.	SSMR: Royal Blue
7.	Keynote #327 Reducer Strip: Roppe Charcoal 123	15.	Coping Cap @ Dumpster: Match P-1	23.	Word Wall: P-3	31.	Bar Joists: Prefinished Gray
8.	Stairs & Railings & Interior Ladder (if req'd): P-5	16.	Coping Cap @ Bldg: Match P-1	24.	Canopy: Pantone 425C	32.	Metal Deck: Prefinished Gray

Finish Schedule

Number	Name	Area	Floor Finish	Base Finish	Walls: Rear Entry (East)	Walls: Left (North)	Walls: False Front (West)	Walls: Right (South)	Ceiling Finish	Remarks
1	Service Writing	141 SF	LVT	RB	Storefront & P-1, P-2, P-3	P-1, P-2, P-3	Storefront	P-1, P-2, P-3	ACT-1	See G301 for paint patterns
2	Waiting	188 SF	LVT	RB	Storefront	P-1, P-2, P-3	P-3 & Vinyl Graphics (By Others), P-1, P-2, P-3	P-1, P-2, P-3	ACT-1	See G301 for paint patterns
3	Toilet	50 SF	LVT	RB	FRP-1	FRP-1	FRP-1	FRP-1	ACT-1	
4	Riser Room	48 SF	SC	None	P-3	P-3	P-3	P-3	P-7	
5	Corridor	85 SF	SC	RB	FRP-1	P-1	P-1	P-1	P-7	
6	Oil Change	1254 SF	SH	None / RB	P-3	P-1, P-4 & Vinyl Graphics (By Others)	P-3	P-1, P-4	No Ceiling	Rubber base on gypsum board walls only. See G301 for paint patterns.
7	Manager	54 SF	SC	RB	P-3	P-3	P-3	P-3	ACT-1	
8	Toilet	46 SF	SC	RB	FRP-1	FRP-1	FRP-1	FRP-1	ACT-1	
9	Work Room	127 SF	SC	RB	P-1	P-1	P-1	P-1	P-7	
10	Break Room	118 SF	SC	RB	P-3	P-3	P-3	P-3	ACT-1	
11	Service	2476 SF	SC	None / RB	P-3	P-1, P-4	P-3	P-1, P-4 & Vinyl Graphics (By Others)	No Ceiling	Rubber base on gypsum board walls only. See G301 for paint patterns.
12	Storage	203 SF	SC	None	P-3	P-3	Fence	P-3	No Ceiling	
13	Storage	500 SF	SC	None	Fence	P-3	P-3	P-3	No Ceiling	
14	Pit	1218 SF	SC	None	None	None	None	None	N/A	Paint all structural steel in Pit P-5 Safety Yellow.

IFB-0

Note: Room #4 intentionally omitted

AHO ARCHITECTS, LLC
www.ahoarch.com

REGISTERED ARCHITECT TIMOTHY A. AHO 25347 STATE OF TEXAS
08/12/2026

Express Oil Change & Tire Engineers

Single Building / Right Hand Oil Change / Rear Enter / Side Tire Storage

Cross Roads, Texas (Aubrey)

FINAL

No.	Description	Date
IFP-0	Issue for permit	06/30/2026
IFB-0	Iss. for Bid / AHJ Rev.	08/12/2026

© 2026 Aho Architects, LLC. All Rights Reserved.

Finish Schedules & Head, Jamb, and Sill Details

Project number	26013
Date	06/30/2026
Drawn by	ARC
Checked by	N/A

A621

Scale As indicated

9/1/2026 1:42:35 PM

1 02_3D View_False Front (Northwest)

*See Civil for actual site conditions, including dumpster enclosure location and orientation.

2 03_3D View_Rear Entry (Southeast)

*See Civil for actual site conditions, including dumpster enclosure location and orientation.

AHO ARCHITECTS, LLC

www.ahoarch.com

REGISTERED ARCHITECT
TIMOTHY A. AHO
25347
STATE OF TEXAS
08/12/2026

Express Oil Change & Tire Engineers

Single Building / Right Hand Oil Change / Rear Enter / Side Tire Storage

Cross Roads, Texas (Aubrey)

FINAL

No.	Description	Date
IFP-0	Issue for permit	06/30/2026
IFB-0	Iss. for Bid / AHJ Rev.	08/12/2026

© 2026 Aho Architects, LLC. All Rights Reserved.

3D Views

Project number	26013
Date	06/30/2026
Drawn by	ARC
Checked by	N/A

R100

Scale

9/1/2026 1:42:43 PM

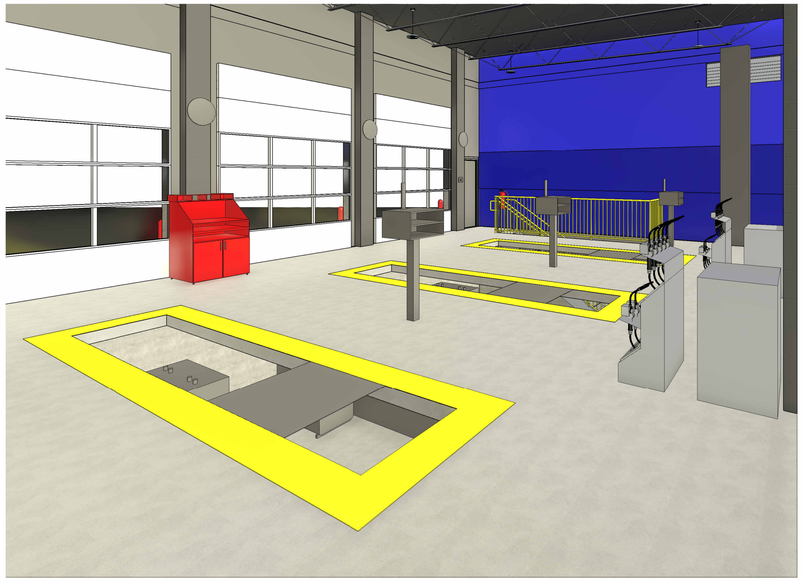

1 04_3D View_Oil Change A

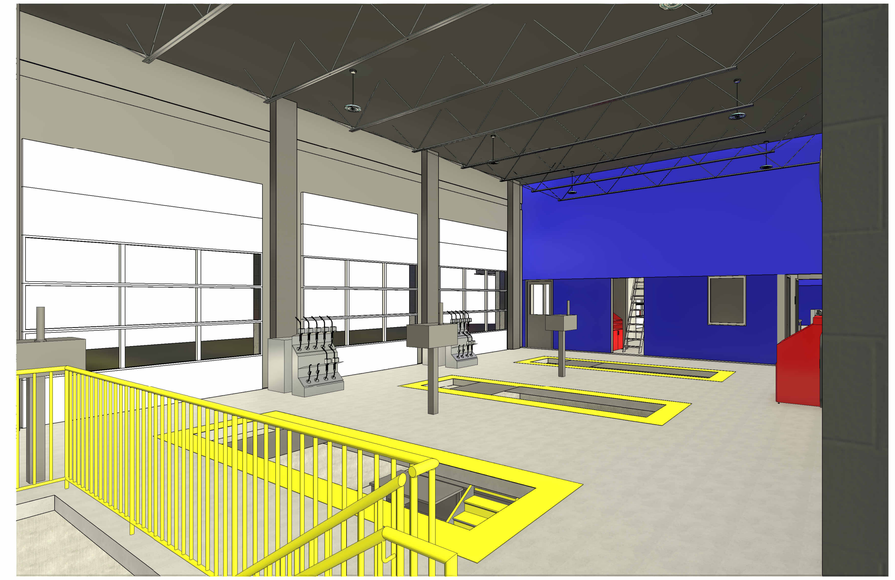

2 05_3D View_Oil Change B

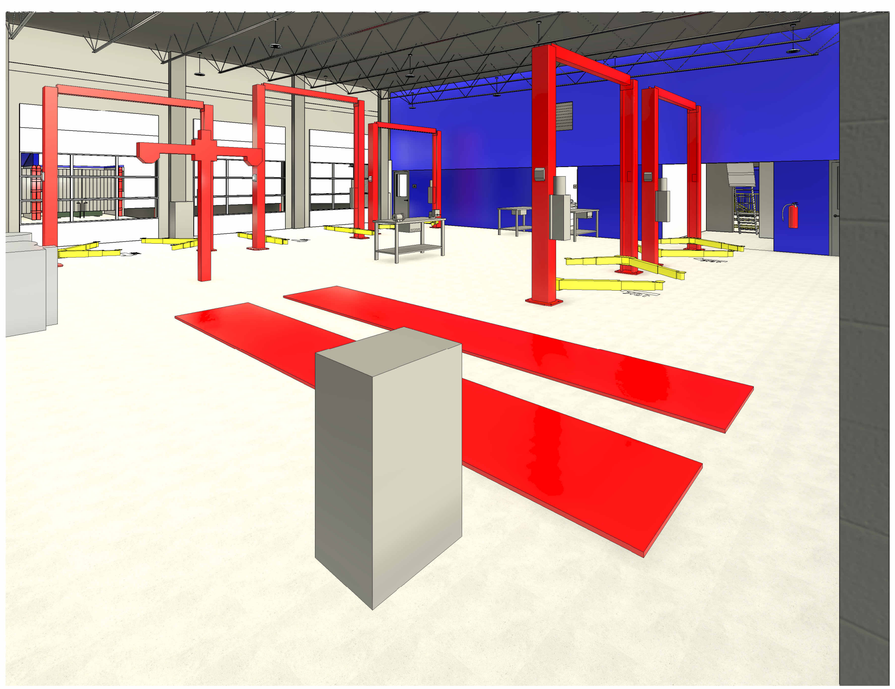

3 06_3D View_Service Bay A

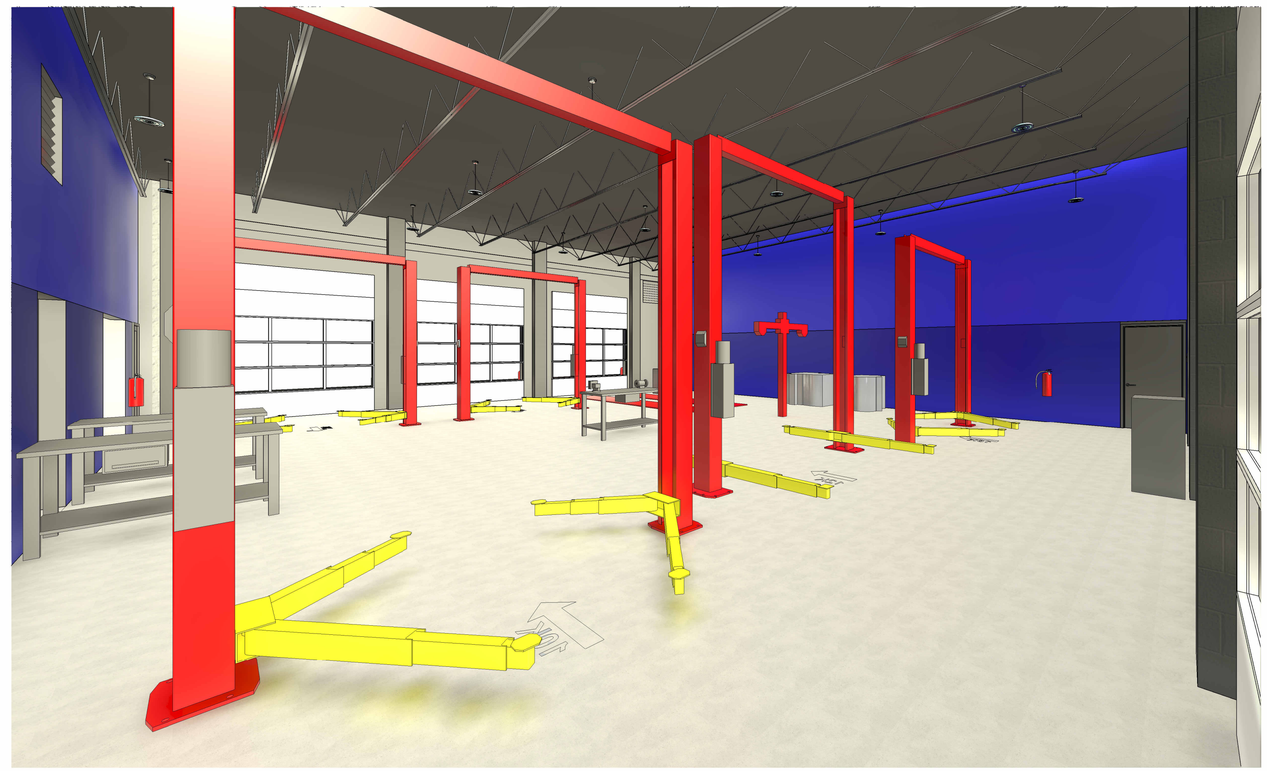

4 07_3D View_Service Bay B

AHO ARCHITECTS, LLC

www.ahoarch.com

REGISTERED ARCHITECT
TIMOTHY A. AHO
25347
STATE OF TEXAS
08/12/2026

Express Oil Change & Tire Engineers

Single Building / Right Hand Oil Change / Rear Enter / Side Tire Storage

Cross Roads, Texas (Aubrey)

FINAL

No.	Description	Date
IFP-0	Issue for permit	06/30/2026
IFB-0	Iss. for Bid / AHJ Rev.	08/12/2026

© 2026 Aho Architects, LLC.
All Rights Reserved.

3D Views

Project number	26013
Date	06/30/2026
Drawn by	ARC
Checked by	N/A

R101

Scale

9/1/2026 1:42:58 PM

SCHEDULE OF SPECIAL INSPECTIONS SERVICES

PROJECT		APPLICABLE TO THIS PROJECT			
MATERIAL / ACTIVITY	SERVICE	Y/N	EXTENT	AGENT*	DATE COMPLETED
1705.1.1 Special Cases (work unusual in nature, including but not limited to alternative materials and systems, unusual design applications, materials and systems with special manufacturer's requirements - add additional rows as needed.)	Submittal review, shop (3) and/or field inspection				
1. Inspection of anchors post-installed in solid grouted masonry: Per research reports including verification of anchor type, anchor dimensions, hole dimensions, hole cleaning procedures, anchor spacing, edge distances, masonry unit, grout, masonry compressive strength, anchor embedment and tightening torque	Field inspection	Y	Periodic or as required by the research report issued by an approved source		
2. Aggregate Pier Inspection: The special inspector's responsibilities include, but are not limited to, review of the aggregate pier designer's use of soil parameters as presented in the project soils report, and during construction, verification of aggregate properties, type and number of lifts of aggregate, hole size and depths and top elevations of the pier elements, and applied energy. Additionally, results of qualitative tests on production aggregate pier elements such as modulus load testing, uplift pull-out testing, bottom stabilization tests and dynamic cone penetration tests, shall be reviewed to verify compliance with design specifications.	Field inspection	N	Periodic or as required by the research report issued by an approved source		
1705.2.1 Structural Steel Construction					
1. Fabricator and erector documents (Verify reports and certificates as listed in AISC 360, Section N.3.2 for compliance with construction documents)	Submittal Review	Y	Each submittal		
2. Material verification of structural steel	Shop (3) and field inspection	Y	Periodic		
3. Structural steel welding:					
a. Inspection tasks Prior to Welding (Observe, or perform for each welded joint or member, the QA tasks listed in AISC 360, Table N5.4-1)	Shop (3) and field inspection	Y	Observe or Perform as noted (4)		
b. Inspection tasks During Welding (Observe, or perform for each welded joint or member, the QA tasks listed in AISC 360, Table N5.4-2)	Shop (3) and field inspection	Y	Observe (4)		
c. Inspection tasks After Welding (Observe, or perform for each welded joint or member, the QA tasks listed in AISC 360, Table N5.4-3)	Shop (3) and field inspection	Y	Observe or Perform as noted (4)		
d. Nondestructive testing (NDT) of welded joints:					
1) Complete penetration groove welds 5/16" or greater in *risk category* III or IV	Shop (3) or field ultrasonic testing - 100%	N	Periodic		
2) Complete penetration groove welds 5/16" or greater in *risk category* II	Shop (3) or field ultrasonic testing - 10% of welds minimum	Y	Periodic		
3) Welded joints subject to fatigue when required by AISC 360, Appendix 3, Table A-3.1	Shop (3) or field radiographic or Ultrasonic testing	N	Periodic		
4) Fabricator's NDT reports when fabricator performs NDT	Verify reports	Y	Each submittal (5)		
4. Structural steel bolting:	Shop (3) and field inspection				
a. Inspection tasks Prior to Bolting (Observe, or perform tasks for each bolted connection, in accordance with QA tasks listed in AISC 360, Table N5.6-1)		Y	Observe or Perform as noted (4)		
b. Inspection tasks During Bolting (Observe the QA tasks listed in AISC 360, Table N5.6-2)			Observe (4)		
1) Pre-tensioned and slip-critical joints		N			
a) Turn-of-nut with matching markings		N	Periodic		
b) Direct tension indicator		N	Periodic		
c) Twist-off type tension control bolt		N	Periodic		
d) Turn-of-nut without matching markings		N	Continuous		
e) Calibrated wrench		N	Continuous		
2) Snug-tight joints		Y	Periodic		
c. Inspection tasks After Bolting (Perform tasks for each bolted connection in accordance with QA tasks listed in AISC 360, Table N5.6-3)		Y	Perform (4)		
5. Visual inspection of exposed cut surfaces of galvanized structural steel main members and exposed corners of the rectangular HSS for cracks subsequent to galvanizing	Shop (3) or field inspection	Y	Periodic		
6. Embedments (Verify diameter, grade, type, length, embedment. See 1705.3 for anchors)	Field inspection	Y	Periodic		
7. Verify member locations, braces, stiffeners, and application of joint details at each connection comply with construction documents	Field inspection	Y	Periodic		
1705.2.2 Cold-Formed Steel Deck					
1. Manufacturer documents (Verify reports and certificates as listed in SDI QA/QC, Section 2, Paragraphs 2.1 and 2.2 for compliance with construction documents)	Submittal Review	Y	Each submittal		
2. Material verification of steel deck, mechanical fasteners and welding materials	Shop (3) and field inspection	Y	Periodic		
3. Cold-formed steel deck placement:	Shop (3) and field inspection	Y			
a. Inspection tasks Prior to Deck Placement (Perform the QA tasks listed in SDI QA/QC, Appendix 1 Table 1.1)		Y	Perform (4)		
b. Inspection tasks After Deck Placement (Perform the QA tasks listed in SDI QA/QC, Appendix 1 Table 1.2)		Y	Perform (4)		
4. Cold-formed steel deck welding:	Shop (3) and field inspection	Y			
a. Inspection tasks Prior to Welding (Observe the QA tasks listed in SDI QA/QC, Appendix 1 Table 1.3)		Y	Observe (4)		
b. Inspection tasks During Welding (Observe the QA tasks listed in SDI QA/QC, Appendix 1 Table 1.4)		Y	Observe (4)		
c. Inspection tasks After Welding (Perform the QA tasks listed in SDI QA/QC, Appendix 1 Table 1.5)		Y	Perform (4)		
5. Cold-formed steel deck mechanical fastening:	Shop (3) and field inspection	Y			
a. Inspection tasks Prior to Mechanical Fastening (Observe the QA tasks listed in SDI QA/QC, Appendix 1 Table 1.6)		Y	Observe (4)		
b. Inspection tasks During Mechanical Fastening (Observe the QA tasks listed in SDI QA/QC, Appendix 1 Table 1.7)		Y	Observe (4)		
c. Inspection tasks After Mechanical Fastening (Perform the QA tasks listed in SDI QA/QC, Appendix 1 Table 1.8)		Y	Perform (4)		
1. Material verification of cold-formed steel deck:					
a. Identification markings	Field inspection		Periodic		
b. Manufacturer's certified test reports	Submittal Review		Each submittal		
2. Connection of cold-formed steel deck to supporting structure:	Shop (3) and field inspection				
a. Welding			Periodic		
b. Other fasteners (in accordance with AISC 360,Section N6)					
1) Verify fasteners are in conformance with approved submittal			Periodic		
2) Verify fastener installation is in conformance with approved submittal and manufacturer's recommendations.			Periodic		
1705.2.3. Open-Web Steel Joists and Joist Girders					
1. Installation of open-web steel joists and joist girders.					
a. End connections - welding or bolted.	per SJI CJ or SJI 100	Y	Periodic		
b.. Bridging - horizontal or diagonal.					
1) Standard bridging.	per SJI CJ or SJI 100	Y	Periodic		
2) Bridging that differs from the specifications listed in SJI CJ or SJI 100.		Y	Periodic		
1705.3 Concrete Construction					
1. Inspect reinforcement, including prestressing tendons, and verify placement.	Shop (3) and field inspection	Y	Periodic		
2. Inspection of anchors cast in concrete.	Shop (3) and field inspection	Y	Periodic		
3. Inspection of anchors post-installed in hardened concrete members per research reports, or, if no specific requirements are provided, requirements shall be provided by the registered design professional and approved by the building official, including verification of anchor type, anchor dimensions, hole dimensions, hole cleaning procedures, anchor spacing, edge distances, concrete minimum thickness, anchor embedment and tightening torque	Field inspection	Y	Periodic or as required by the research report issued by an approved source		
a. Adhesive anchors installed in horizontal or upward-inclined orientation that resist sustained tension loads.		Y	Continuous		
b. Mechanical and adhesive anchors note defined in 4a.		Y	Periodic		
4. Verify use of approved design mix	Shop (3) and field inspection	Y	Periodic		
5. a. Prior to placement, fabricate specimens for strength tests, fresh concrete sampling, perform slump or slump flow, and air content density tests, and determine temperature of concrete.	Shop (3) and field inspection	Y	Continuous		
6. b. Verify that concrete specimens for strength tests are maintained in the required initial curing and laboratory curing environment, and that the maximum and minimum temperatures during the initial curing period are reported.	Shop (3) and field inspection	Y	Continuous		
7. Verify maintenance of specified curing temperature and techniques	Shop (3) and field inspection	Y	Periodic		
8. Concrete strength testing and verification of compliance with construction documents	Field testing and review of laboratory reports	Y	Periodic		
1705.4 Masonry Construction					
MINIMUM VERIFICATION REQUIREMENTS					
(A) Level 1, 2 and 3 Quality Assurance:					
1. Prior to construction, verification of compliance of submittals	Submittal Review		Prior to Construction		
(B) Levels 2 and 3 Quality Assurance:					
1. As masonry construction begins, verify that the following are in compliance:					
a. Proportions of the site-prepared mortar	Field inspection	Y	Periodic		
c. Grade, type, and size of reinforcement, and anchor bolts.	Field Inspection	Y	Periodic		
2. Prior to grouting, verify that the following are in compliance:					
a. Grout space	Field Inspection	Y	Level 2 - Periodic		
		N	Level 3 - Continuous		
b. Placement of reinforcement, connectors, and anchor bolts	Field inspection	Y	Level 2 - Periodic		
		N	Level 3 - Continuous		
3. Verify compliance of the following during construction:					
a. Materials and procedures with the approved submittals	Field inspection	Y	Periodic		
b. Placement of masonry units and mortar joint construction	Field Inspection	Y	Periodic		
c. Size and location of structural members	Field inspection	Y	Periodic		
d. Type, size, location of anchors, including other details of anchorage of masonry to structural members, frames, or other construction	Field inspection	Y	Level 2 - Periodic		
		N	Level 3 - Continuous		
f. Preparation, construction, and protection of masonry during cold weather (temperature below 40°F) or hot weather (temperature above 90°F).	Field inspection	Y	Periodic		
4. Observe preparation of grout specimens, mortar specimens, and/or prisms	Field inspection	Y	Level 2 - Periodic		
		N	Level 3 - Continuous		
1705.6 Soils					
1. Verify materials below shallow foundations are adequate to achieve the design bearing capacity.	Field inspection	Y	Periodic		
2. Verify excavations are extended to proper depth and have reached proper material.	Field inspection	Y	Periodic		
3. Perform classification and testing of compacted fill materials.	Field inspection	Y	Periodic		
4. Verify use of proper materials, densities, and lift thicknesses during placement and compaction of controlled fill	Field inspection	Y	Continuous		
5. Prior to placement of controlled fill, inspect subgrade and verify that site has been prepared properly.	Field inspection	Y	Periodic		
1705.8 Cast-in-Place Deep Foundations					
1.Inspect drilling operations and maintain complete and accurate records for each element	Field inspection		Continuous		
2. Verify placement locations and plumbness, confirm element diameters, bell diameters (if applicable), lengths, embedment into bedrock (if applicable) and adequate end-bearing strata capacity. Record concrete or grout volumes	Field inspection		Continuous		
3. For concrete elements, perform tests and additional inspections in accordance with Section 1705.3	See Section 1705.3		See Section 1705.3		
1705.10 Fabricated items					
1. List of fabricated items requiring special inspection during fabrication:	Shop inspection	N	As noted in each applicable shop activity		
2. List of fabricated items to be fabricated on the premises of a fabricator approved to perform such work without special inspection (including name of approved agency providing periodic auditing):					
1705.11.3 Wind-resisting Components					
1. Roof covering, roof deck and roof framing connections.	Shop (3) and field inspection	Y	Periodic		
2. Exterior wall covering and wall connections to roof and floor diaphragms.	Shop (3) and field inspection	Y	Periodic		
1705.12.1 Structural Steel Special Inspections for Seismic Resistance					
1. Seismic force-resisting systems in SDC B, C, D, E, or F.	Shop (3) and field inspection	N	In accordance with AISC 341		
2. Structural steel elements in SDC B, C, D, E, or F other than those in Item 1. including struts, collectors, chords and foundation elements.	Shop (3) and field inspection	N	In accordance with AISC 341		

GENERAL NOTES

1. Contractor shall compare structural drawings and architectural drawings. Any omissions or discrepancies between plans, details, and specifications shall be brought to the attention of the Architect or Engineer before bidding. In all cases, more stringent requirement governs. Architectural dimensions and elevations will control.
2. Structural drawings or parts of the structural drawings may not be used as shop drawings without prior written approval.
3. All or parts of these drawings were produced with computer aided drafting. Drawings are available from the Engineer in DWG format on request.
4. Contractor proposed changes to details must be clearly noted on the first sheet of all shop drawings.
5. Construction shown is stable after the building is complete including interior and exterior finishes. The Contractor is responsible for temporary bracing of the structure during construction.
6. Review of submittal information shall be for general compliance with the contract documents and shall not include checking of detailed dimensions or detailed quantities.

DESIGN LOADS

1. Reference code for loading 2021 IBC.
   a. Risk Category II
   b. Wind Load
      1) Basic Wind Speed (3 sec gust) 106 mph
      2) Wind Exposure C
      3) Internal Pressure Coefficient +/- 0.18
      4) Velocity Pressure (qz) 24.5 psf
   c. Roof Snow Load
      1) Ground Snow Load (Pg) 10 psf
      2) Flat Roof Snow Load (Pf) 10 psf
      3) Snow Exposure (Ce) 1.0
      4) Importance Factor 1.0
      5) Thermal Factor (Ct) 1.0
   d. Seismic Load
      1) Importance Factor 1.0
      2) Mapped Spectral Response Accelerations
         a) Ss 0.117
         b) S1 0.057
      3) Site Class C
      4) Spectral Response Coefficients
         a) Sds 0.102
         b) Sd1 0.057
      5) Seismic Design Category A
      6) Base Seismic-Force-Resisting System(s) and Response Modification Factor
         a) Intermediate Reinforced Masonry Shear Walls 3.5
      7) Design Base Shear 8 kips
      8) Seismic Response Coefficient (Cs) 0.029
      9) Analysis Procedure = Equivalent Lateral Force
   e. Live Load
      1) Roof Load 20 psf
      2) Service Bay and slabs on grade 100 psf

IFB-0

FOUNDATIONS

1. Foundation design for this project was based on soils information provided by Terracon
2. Bearing capacity---------- 1500 psf
3. All footings are to bear on engineered fill. Coordinate with geotechnical report for extents of undercut and moisture conditioning.
4. Install corner bars at all footing intersections and corners (Provide lap length e.w.)
5. All footing elevations are given to the top of the footings.
6. Footing steps shown on the plans are furnished as a guide for estimating quantities. Final elevations are to be set in the field. Bearing elevations must be approved by a Soils Engineer before any concrete is placed.
7. Coordinate foundation elevations with plumbing requirements. Step footings as required to clear plumbing lines.
8. Provide drainage for all retaining walls, see architectural for notes and details.

MASONRY

1. All masonry work to be in accordance with "Building Code Requirements for Concrete Masonry Structures" TMS 402-2016 and "Specifications for Masonry Structures" TMS 602-2016
2. Fill all concrete masonry units with concrete or grout from the top of the footing to the finish floor or to 8" above finish grade whichever is higher.
3. Use ladder type joint reinforcement (H&B 220 LADDER-MESH or better) at 16" on center in all cavity walls where brick is used for one or more of the wythes.
4. Use truss type joint reinforcement (H&B 120 TRUSS-MESH or better) at 16" o/c. in all other masonry walls.
5. Provide joint reinforcement at 8" o/c. for all walls constructed with stack bond.
6. Use Type "M" or Type "S" mortar in accordance with TMS 602 Table SC-1 and ASTM C270.
7. Minimum compressive strength of concrete masonry $f'm$ = 2500 psi. Submit for review test data on strength of units before starting any masonry work.
8. Minimum compressive strength of grout $f'm$ = 2500 psi. Use 3/8" max size aggregate. See Special Inspection Schedule for any testing requirements. Grout slump shall be 8" to 11".
9. Use "Fine" grout for all reinforced piers and reinforced wall in accordance with ASTM C 476.
10. Each grout lift shall not exceed 5'-0" unless cleanouts are provided in the bottom course.
11. Fill cells under all lintels with grout.
12. Provide lintels over all openings through wall. See lintel details for reinforcement.
13. Unless otherwise noted provide control joints in all walls 4'-0" from wall intersections or corners and at 20'-0"
14. Extend all horizontal steel and bond beams thru control joints.
15. Vertical Reinforcement shall extend into the bond beam.
16. Unless noted, all bars are to be located at the center of cell. Where bars are specified at each face, provide minimum ¾" clear space between reinforcement and CMU face shell.
17. Anchor bolt into grouted cell locations only, unless noted otherwise.

REINFORCING STEEL AND CONCRETE

1. All concrete work is to be in accordance with the "Building Code Requirements for Reinforced Concrete" (ACI 318-19).
2. All detailing is to be in accordance with "ACI Detailing Manual" SP-66
3. Use of Calcium Chloride, Chloride Ions, or other salts in concrete are prohibited.
4. Concrete Properties: See Schedule
   a. All concrete must obtain 7 day strength of 70% of design strength.
   b. Concrete mixes may use up to 25% of cementious weight as fly ash.
   c. Concrete mixes may use water reducers, accelerators or retarders with prior approval.
   d. Do not provide air entrainment in concrete mixes for interior slabs.
5. All steel reinforcement shall be of deformed bars of billet steel conforming to ASTM A615, Grade 60 in all concrete.
6. Welded wire fabric shall be ASTM 185 and shall lap 2 cross wires or 6" whichever is greater on all sides. All laps shall be wired together.
7. Provide (2) #4 bars x 4'-0" at re-entrant corner locations Typical. Locate 3" away from corner and space 1'-0" apart.
8. Minimum concrete cover for reinforcement:
   a) Footings 3" bottom, 2" sides
   b) Cast-In-Place Walls
      Surfaces exposed to weather or soil 2" - #6 and greater, 1-1/2" - #5 and smaller
      Other surfaces 3/4"
9. Provide corner bars at all wall and footing intersections.
10. No openings shall be allowed to penetrate any concrete work, unless it is shown on the structural framing plans without prior written approval. Contractor shall submit for review locations of proposed openings not shown 30 days prior to pouring any concrete.
11. Provide a continuous water bar at all wall construction joints below ground level.
12. Use 3/4" chamfer for all exposed corners unless noted.
13. Testing samples for preparing strength test specimens of each concrete mixture placed each day shall be taken in accordance with (1) through (3).
    1. At least once a day
    2. At least once for each 150yd^3 of concrete
    3. At least once for each 5000ft^2 of surface area for walls or slabs.

STRUCTURAL STEEL

1. All detailing, fabricating, and erection of structural steel shall be in accordance with the AISC 360-16 "Specifications for Structural Steel Buildings". All reactions shown are ASD loads.
2. All connections are to be detailed as Type 2 "simple frame connections".
3. All structural steel W shapes shall be ASTM A992.
4. All structural steel Tube sections shall be ASTM A500 Grade C.
5. All structural steel Pipe sections shall be ASTM A53.
6. All structural steel channels, angles and other sections shall be ASTM A36, unless noted.
7. Headed Studs shall be Type B Shear Connectors.
8. Shop and field connections shall be welded with E-70XX electrodes or bolted with 3/4" dia. A-325N or A-325F bolts, unless noted.
9. Use 3/4" cap and bearing plates, unless noted.
10. Use 3/4" dia x 1'-0" long ASTM 1554 Grade 36 anchor bolts, unless noted. In lieu of cast bolts, 3/4"x1'-0" long HAS rods epoxied with Hilti HVA epoxy, or equal, may be used with prior approval.
11. Grout under baseplates with ASTM C 1107 cementitious 6000 psi Non-Shrink Grout.
12. Structural steel shall be shop primed per SSPC paint system No. 7. Primer shall be SSPC paint with a minimum thickness of 2.0 MILS. Omit Paint at surfaces to be fireproofed.
13. Provide L 3"x3"x1/4" frames around all roof opening through metal decking.

STEEL JOIST

-

1. All steel joists shall conform to the standard specifications for the joist noted, as adopted by the Steel Joist Institute.
2. Refer to Components & Cladding Table and Diagram for roof uplift zones and pressures. Use 8psf dead load for net uplift determination.
3. K Series joists shall be welded to bearing plates or steel members with two 1/8" fillet welds 2" long.
4. All joist bearing plates are to be set 1/4" above the top of concrete masonry units.
5. Weights of mechanical units are not included in the joist loading designation shown. Design joist for loading shown plus the weight of mechanical shown. General contractor is to verify all weights of mechanical units with Mechanical Subcontractor before submitting shop drawings.

-

COLD-FORMED METAL (CFS) FRAMING (Tower Element)

-

1. All detailing, fabricating, and erection of light gauge steel shall be in accordance with the AISI S240-20 "North American Standard for Cold-Formed Steel Structural Framing".
2. All studs, joist, tracks, bridging, and accessories shall be a minimum of G60 galvanized and have minimum yield strength of 33ksi, unless noted otherwise.
3. Furnish design calculations sealed by a Professional Engineer licensed in the state of that the project is located for all truss members
4. Top and bottom tracks to 600T125-43 unless noted otherwise.
5. Provide double studs at all wall intersections, jambs, corners, and intersections.
6. All wall studs to have full bearing at top and bottom of stud.

REQUIRED STRUCTURAL SUBMITTALS

-

1. Concrete Mix Designs conforming to ACI 318 requirements
2. Reinforcing steel for all cast in place concrete work shown on the strucural drawings.
3. Reinforcing steel for all masonry work shown on the strucural drawings.
4. Structural steel.
5. Bar joist, composite floor deck, and roof deck.
6. Cold formed metal stud trusses.
7. Drilled piers

BJW STRUCTURAL ENGINEERS
BARNETT JONES WILSON, LLC ◆ PELL CITY ◆ TUSCALOOSA ◆ CHATTANOOGA ◆ WWW.STRUCT-ENGR.COM

AHO ARCHITECTS, LLC
www.ahoarch.com

08.12.2026
STATE OF TEXAS
JOHN CARTON JONES
114125
LICENSED
PROFESSIONAL ENGINEER

Express Oil Change & Tire Engineers

Single Building / Right Hand Oil Change / Rear Enter / Side Tire Storage

Cross Roads, Texas (Aubrey)

FINAL

No.	Description	Date
IFP-0	Issue for Permit	06/30/2026
IFB-0	Iss for Bid/AHJ Rev	08/12/2026

© 2026 Aho Architects, LLC. All Rights Reserved.

General Notes & Schedule of Special Inspections

Project number	26013
Date	06/30/2026
Drawn by	jcj
Checked by	jd

S0.1

Scale 3/4" = 1'-0"

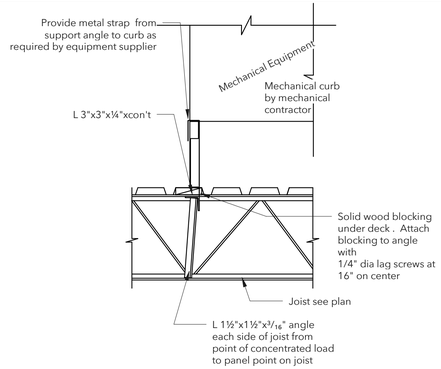

Typical Mechanical Equipment Support Details

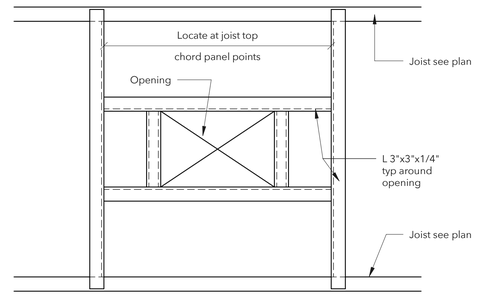

Typical Frame at Roof Deck Opening

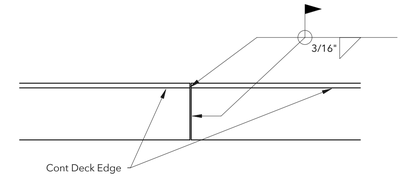

Typical Roof Deck Edge Angle Splice Detail

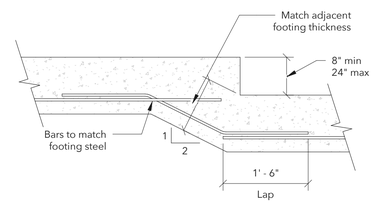

Single Footing Step

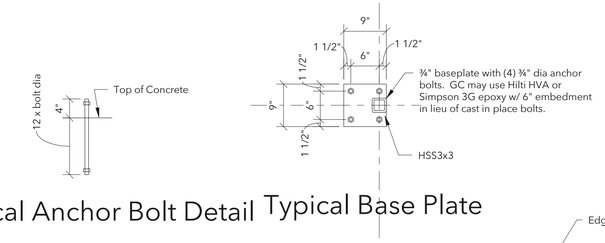

Typical Anchor Bolt Detail

Typical Base Plate

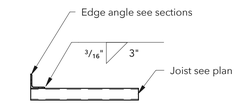

Deck Edge Fastening Detail

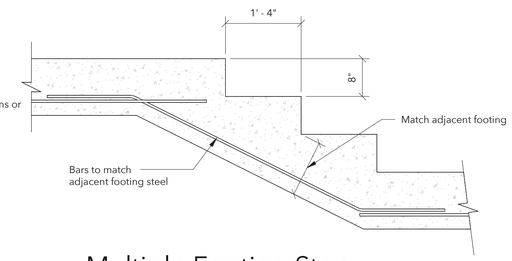

Multiple Footing Step

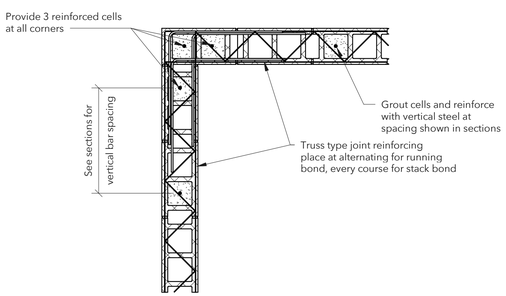

Typical Joint Reinforcing at Corner

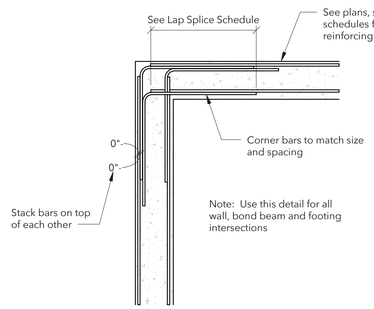

Typical Beam, Wall or Footing Reinforcing at Corners

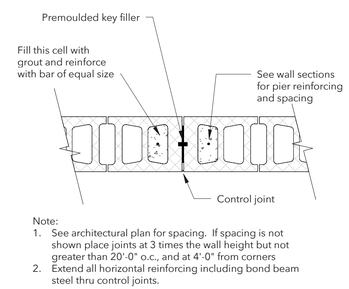

Note:
1. See architectural plan for spacing. If spacing is not shown place joints at 3 times the wall height but not greater than 20'-0" o.c., and at 4'-0" from corners
2. Extend all horizontal reinforcing including bond beam steel thru control joints.

Typical MasonryWall Control Joint

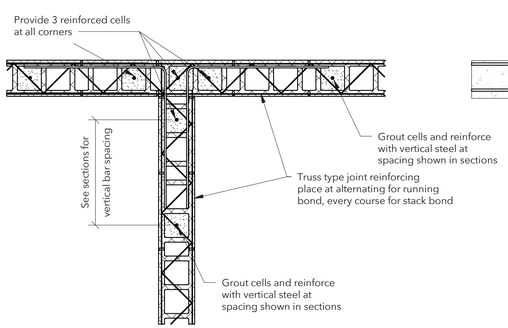

Typical Joint Reinforcing at Intersection

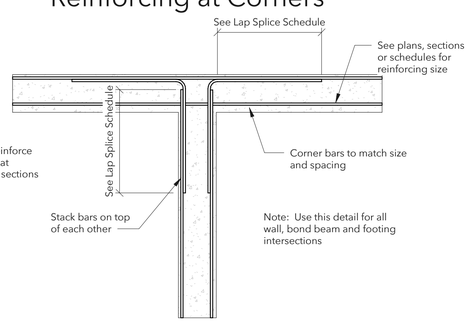

Typical Beam, Wall or Footing Reinforcing at Intersetions

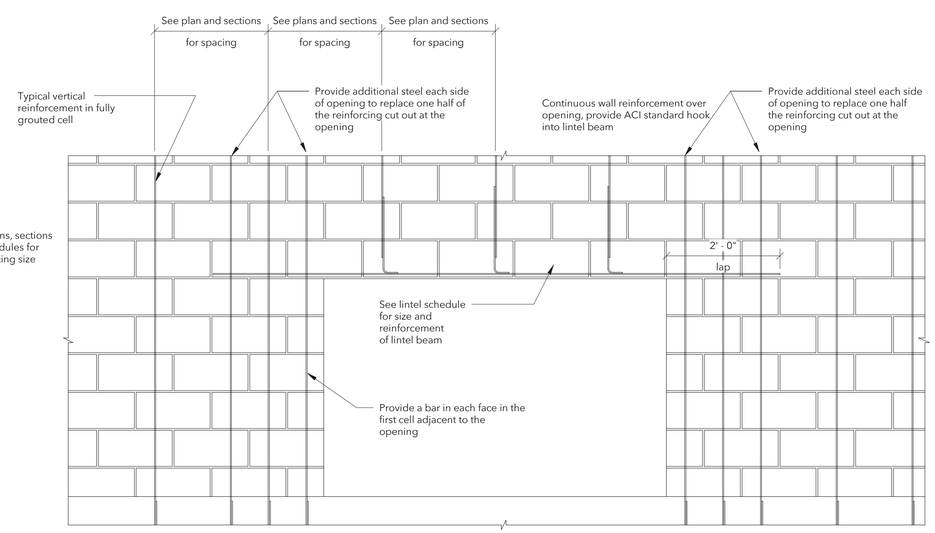

CMU Lintel Elevation

BJW STRUCTURAL ENGINEERS
BARNETT JONES WILSON, LLC ⊕ PELL CITY ⊕ TUSCALOOSA ⊕ CHATTANOOGA ⊕ WWW.STRUCT-ENGR.COM

AHO ARCHITECTS, LLC
www.ahoarch.com

08.12.2026
STATE OF TEXAS
JOHN CARTSON JONES
114125
LICENSED
PROFESSIONAL ENGINEER

Express Oil Change & Tire Engineers
Single Building / Right Hand Oil Change / Rear Enter / Side Tire Storage
Cross Roads, Texas (Aubrey)

FINAL

No.	Description	Date
IFP-0	Issue for Permit	06/30/2026
IFB-0	Iss for Bid/AHJ Rev	08/12/2026

© 2026 Aho Architects, LLC. All Rights Reserved.

Typical Details

Project number	26013
Date	06/30/2026
Drawn by	jcj
Checked by	jd

S0.2

Scale 3/4" = 1'-0"

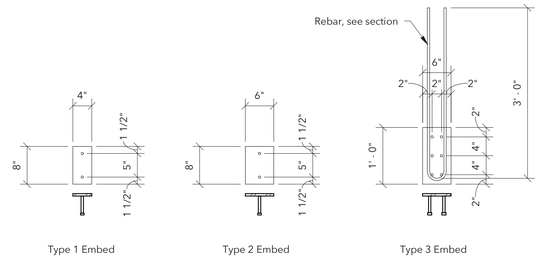

Type 1 Embed Type 2 Embed Type 3 Embed

Embed plates

⅜" plate w/ ½"x4"headed studs

CONCRETE SCHEDULE

Concrete Use	Design Strength	Max W/C Ratio	Slump Limits	Entrained Air Range	Weight	Notes
Basement Walls	4000 psi	n/a	6" to 8"	3% to 5%	150 pcf	Use HRWR
Slabs on Composite Metal Deck	4000 psi	n/a	6" to 8"	---	150 pcf	Use HRWR
Slabs on Grade/Grade Beams	4000 psi	n/a	6" to 8"	---	150 pcf	Use HRWR

Metal Deck Attachment Schedule

Area	Support Fastener/Pattern	Sidelap Fastener/Pattern
Roof - typical	#12 TEK screws 36/4 pattern	2 - #10 TEK screws
Roof - hatched area	#12 TEK screws 36/4 pattern	10 - #10 TEK screws

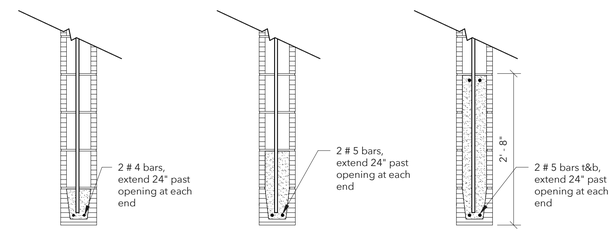

Less than 4'-0" Less than 8'-0" Overhead Doors

CMU Lintel Schedule

Reinforcing Steel Lap Splice Lengths

Bar Size	Column Splices	Bm, Ftg & Wall Splices	
		Top Bars	Other Bars
# 3	12"	19"	15"
# 4	15"	25"	19"
# 5	19"	31"	24"
# 6	23"	37"	29"
# 7	26"	54"	42"
# 8	30"	62"	48"
# 9	34"	70"	54"
# 10	38"	79"	61"
# 11	42"	87"	67"

Notes:
1. Top bars are any horizontal reinforcing steel that has another layer of steel more than 2" below the bars or reinforcing steel that has more than 12" of concrete below the bars.
2. All horizontal reinforcing bars in walls may be detailed as "Other Bars".
3. All corner bars may be detailed as "Other Bars".

Reinforcing Steel Lap Splice & Development Length for Concrete Masonry

Bar Size	Bar in center of wall			Bar in each face of wall
	6" CMU	8" CMU	12" CMU	
#3	16"	16"	16"	16"
#4	21"	21"	21"	30"
#5	32"	26"	26"	46"
#6	61"	43"	40"	85"
#7	NA	60"	46"	115"
#8	NA	NA	61"	NA

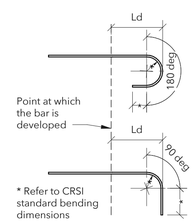

Notes:
1. Lengths are for vertical splces in walls.
2. Bar length for center of wall are based on f'm of 1500 psi or greater.
3. Bar length for face of wall are based on f'm of 2000 psi or greater.
4. Refer to General Notes and details for masonry strength.

Components and Cladding Schedule
a = 6.5'

Area (sf)	Zone 1,2,3 (+) psf	Zone 1 (-) psf	Zone 2 (-) psf	Zone 3 (-) psf	Zone 4 (+) psf	Zone 4 (-) psf	Zone 5 (+) psf	Zone 5 (-) psf
10	10.5	-25.8	-43.3	-65.1	23.6	-25.6	23.6	-31.5
50	9.0	-24.3	-32.6	-39.2	21.2	-23.1	21.2	-26.6
100	8.3	-23.6	-28.0	-28.0	20.1	-22.1	20.1	-24.5

Notes:
1. Listed pressures are ultimate.
2. For ASD joist design use formula from ASCE 7: 0.6(D+W)

Beam to Column Single Shear Plate Connection Schedule

Min Beam Depth	Max end reaction	Length	# of bolts	Plate thickness	Fillet weld size
W10	16.7k	5-1/2"	2	5/16"	3/16"

- Use this table for Wide Flange Beams to HSS Columns
- Loads are ASD
- Bolts are 3/4"dia Group A ASTM F3125 Gr A325 in standard or short-slotted holes transverse to direction of load with threads Excluded from shear plane. More than 5 bolts must have short-slotted holes.
- Plate is A36 and welds are E-70XX electrodes
- Beam reactions that exceed the max reaction in this table will use the Double Angle Frame Connection Schedule below.

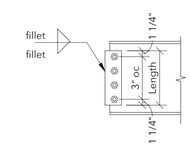

Beam Double Angle Shear Connection Schedule

Min Beam Depth	Max end reaction	Length	rows of bolts	Angle thickness	Weld A fillet size	Weld B fillet size
W10	14.6k	5-1/2"	2	1/4"	3/16"	1/4"

- Use this table for Wide Flange Beams to Wide Flange Columns or other Beams
- Loads are ASD
- Bolts are 3/4"dia Group A ASTM F3125 Gr A325 in standard or short-slotted holes transverse to direction of load with threads Excluded from shear plane.
- Angles are A36 and welds are E-70XX electrodes
- Beam reactions that exceed the max reaction in this table will shall be designed by steel fabricator and submit signed/sealed calculations prepared by a Professional Engineer licensed in the State of the Project

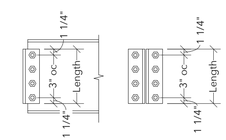

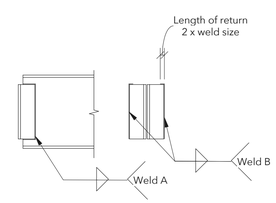

BJW STRUCTURAL ENGINEERS
BARNETT JONES WILSON, LLC ⊕ PELL CITY ⊕ TUSCALOOSA ⊕ CHATTANOOGA ⊕ WWW.STRUCT-ENGR.COM

AHO ARCHITECTS, LLC
www.ahoarch.com

08.12.2026
STATE OF TEXAS
JOHN CARTSON JONES
114125
LICENSED
PROFESSIONAL ENGINEER

Express Oil Change & Tire Engineers
Single Building / Right Hand Oil Change / Rear Enter / Side Tire Storage
Cross Roads, Texas (Aubrey)

FINAL

No.	Description	Date
IFP-0	Issue for Permit	06/30/2026
IFB-0	Iss for Bid/AHJ Rev	08/12/2026

© 2026 Aho Architects, LLC. All Rights Reserved.

Schedules

Project number	26013
Date	06/30/2026
Drawn by	jcj
Checked by	jd

S0.3

Scale 3/4" = 1'-0"

BJW STRUCTURAL ENGINEERS

BARNETT JONES WILSON, LLC ⊕ PELL CITY ⊕ TUSCALOOSA ⊕ CHATTANOOGA ⊕ WWW.STRUCTENGR.COM

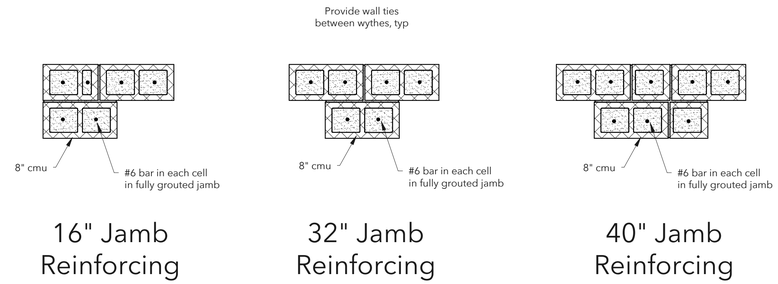

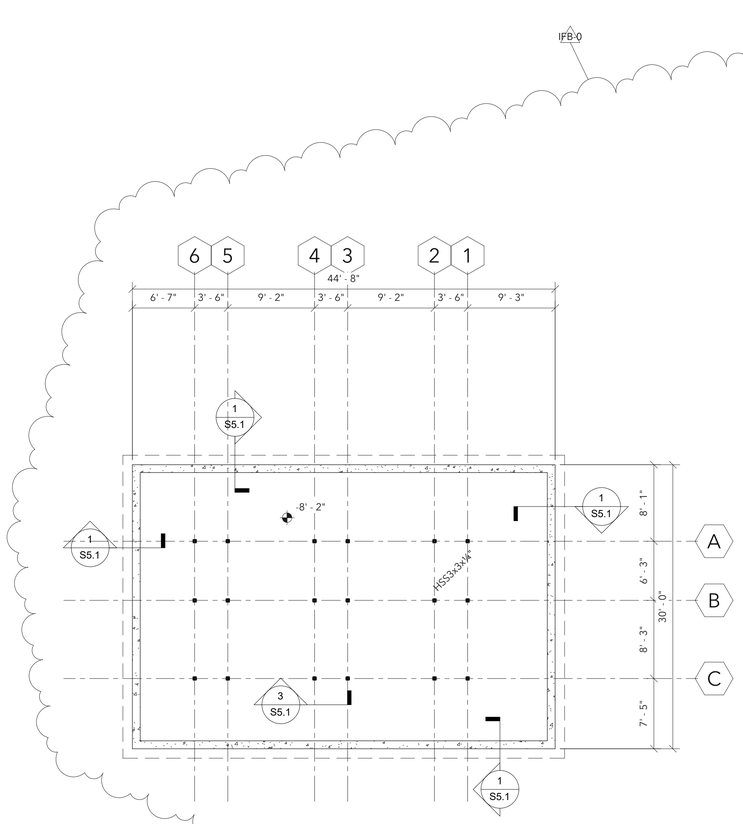

PIT FOUNDATION PLAN

1/8" = 1'-0"

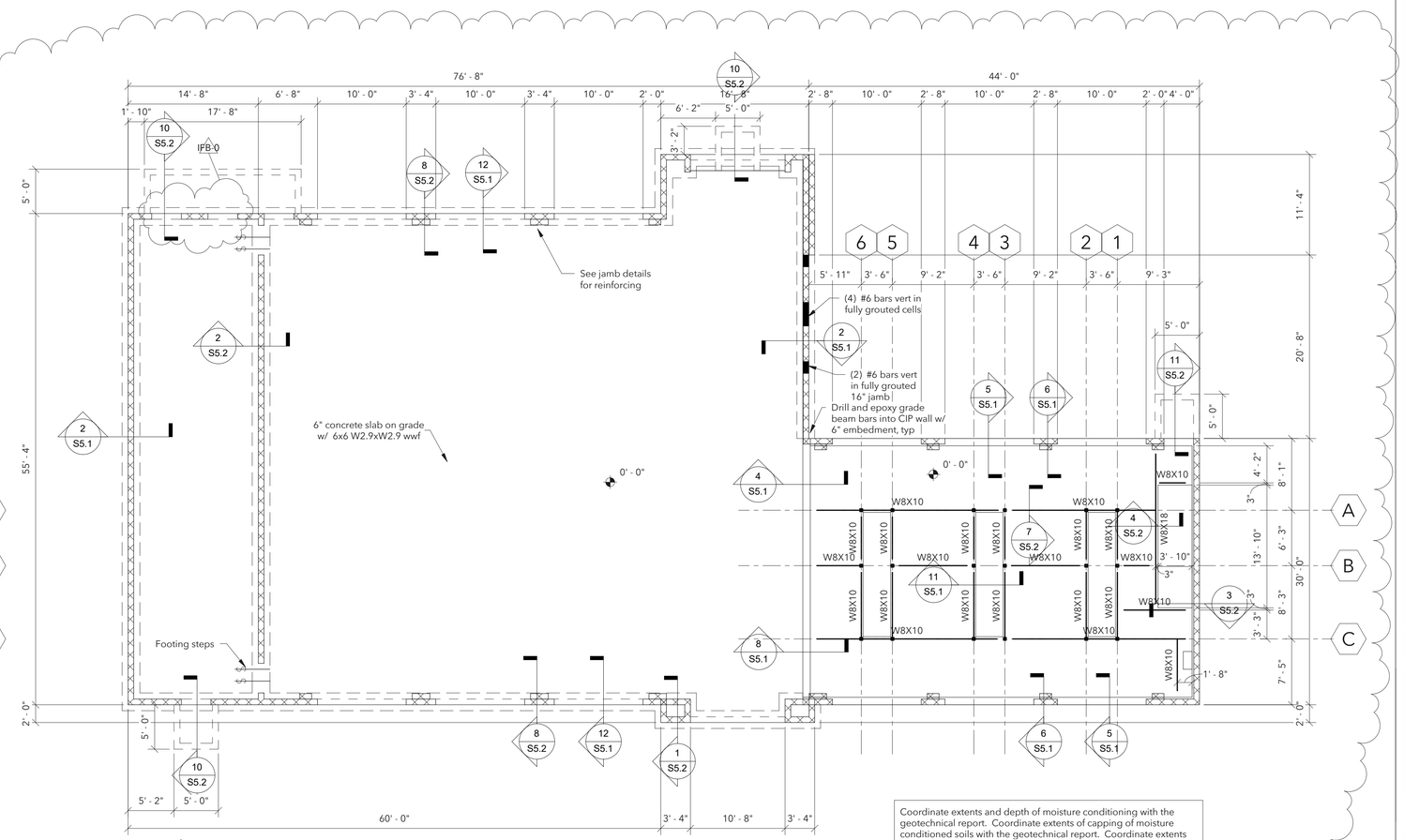

FOUNDATION PLAN

1/8" = 1'-0"

Sheet Notes:

1. See Sheet No S0 for typical details and general notes.
2. Reference all elevations to finish floor elevation (+) 0'-0"
3. Floor construction 3" concrete slab with 6x6 W2.9xW2.9 wwf over 2" x 20 ga. galvanized (G60) composite metal deck. Total slab thickness = 5". Provide 5/8" dia puddle welds on 36/4 pattern w/ (3) #12 TEK screw sidelap fasteners per span
4. All steel beam reactions shall be designed for 10 kips (ASD) unless noted otherwise.
5. Refer to architectural for all dimensions, slopes, elevations, etc. not illustrated on this plan. Coordinate all final dimensions and elevations with architectural.

Coordinate extents and depth of moisture conditioning with the geotechnical report. Coordinate extents of capping of moisture conditioned soils with the geotechnical report. Coordinate extents of polyethylene sheeting with geotechnical report.

AHO ARCHITECTS, LLC

www.ahoarch.com

08.12.2026

STATE OF TEXAS
JOHN CARTON JONES
114125
LICENSED
PROFESSIONAL ENGINEER

Express Oil Change & Tire Engineers

Single Building / Right Hand Oil Change / Rear Enter / Side Tire Storage

Cross Roads, Texas (Aubrey)

FINAL

No.	Description	Date
IFP-0	Issue for Permit	06/30/2026
IFB-0	Iss for Bid/AHJ Rev	08/12/2026

© 2026 Aho Architects, LLC.
All Rights Reserved.

Foundation Plan

Project number	26013
Date	06/30/2026
Drawn by	jcj
Checked by	jd

S1.1

Scale As indicated

BJW STRUCTURAL ENGINEERS
BARNETT JONES WILSON, LLC ⊕ PELL CITY ⊕ TUSCALOOSA ⊕ CHATTANOOGA ⊕ WWW.STRUCT-ENGR.COM

AHO ARCHITECTS, LLC
www.ahoarch.com

08.12.2026
STATE OF TEXAS
JOHN CARTSON JONES
114125
LICENSED
PROFESSIONAL ENGINEER

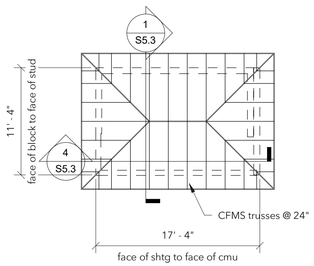

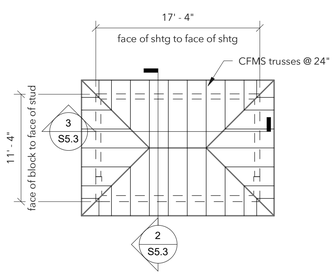

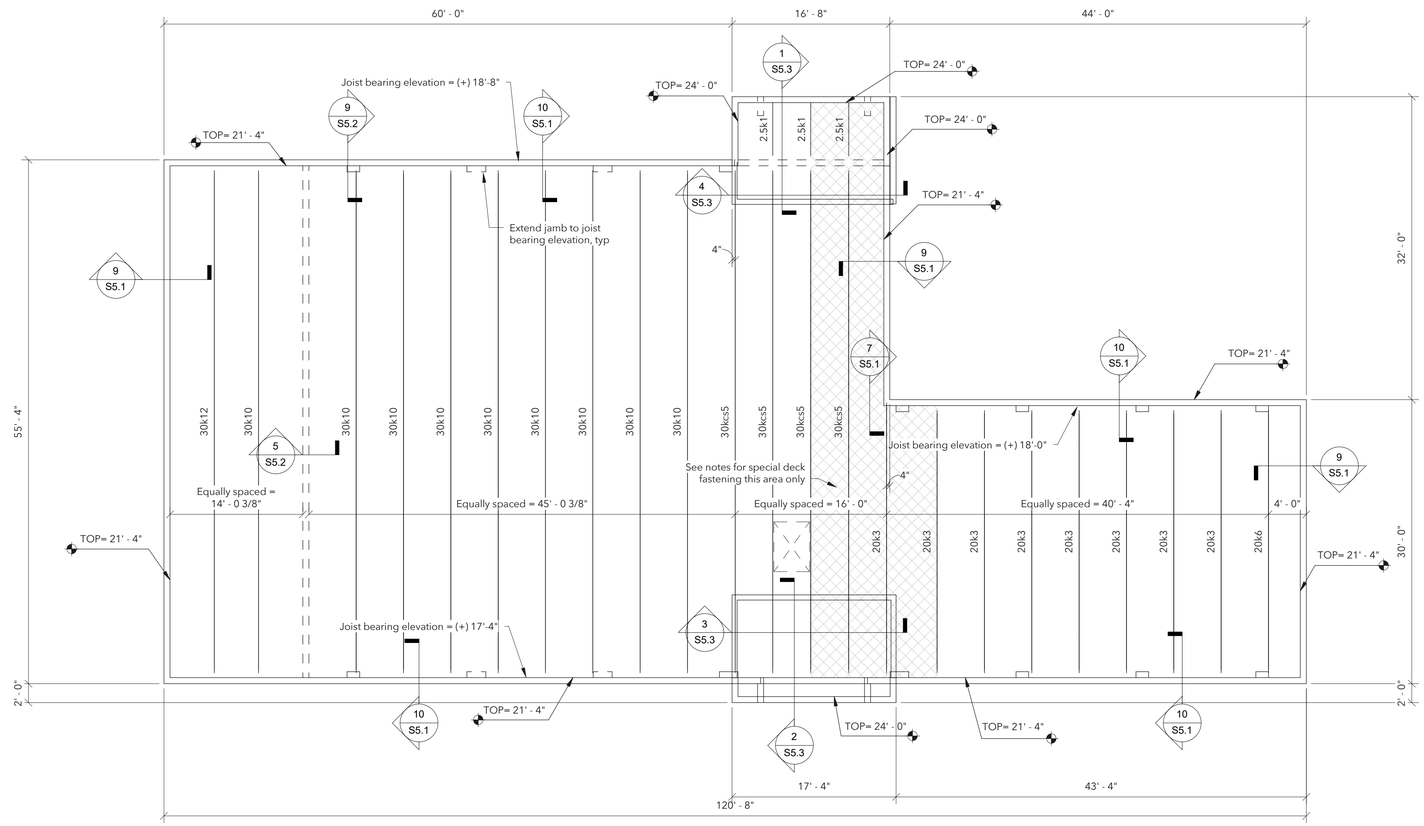

HIGH ROOF FRAMING PLAN

1/8" = 1'-0"

Sheet Notes:

1. See Sheet No S0.x for typical details and general notes.
2. Reference all elevations to finish floor elevation (+) 0'-0"
3. Truss Bearing Elevation (+) 23'-4".
4. Roof slope = 7"/12", unless noted
5. Roof construction 5/8" plywood deck with H-clips. Attach with 8d nails @ 6" o.c..
6. Refer to architectural drawings for all dimensions, slopes, elevations, etc... not illustrated on this plan. Coordinate all final dimensions and elevations with architectural.
7. Truss loading: Top Chord Live Load = 20psf, Top Chord Dead Load = 10psf, Bottom Chord Dead Load = 10psf.
8. Truss requirements: (note that all of these requirements must be included in the truss submittal prior to receiving approval)
   a) Furnish design calculations sealed by a Professional Engineer licensed in the state of that the project is located for all truss members.
   b) Truss manufacturer shall specify and provide all truss to truss and truss bearing connections, and not contain mention of "by others" in relation to design.
   c) Truss manufacturer shall be responsible for providing and illustrating all temporary and permanent bracing required.

ROOF FRAMING PLAN

1/8" = 1'-0"

Sheet Notes:

1. See S0.x Sheets for typical details and general notes.
2. Reference all elevations to finish floor elevation (+) 0'-0"
3. See plan for Joist Bearing Elevations.
4. Roof construction 1 1/2" x 22 ga. type B painted (gray) metal deck. See S0.3 sheets for attachment details. Paint bar joist gray.
5. Refer to architectural drawings for all dimensions, slopes, elevations, etc... not illustrated on this plan. Coordinate all final dimensions and elevations with architectural.

Express Oil Change & Tire Engineers

Single Building / Right Hand Oil Change / Rear Enter / Side Tire Storage

Cross Roads, Texas (Aubrey)

FINAL

No.	Description	Date
IFP-0	Issue for Permit	06/30/2026
IFB-0	Iss for Bid/AHJ Rev	08/12/2026

© 2026 Aho Architects, LLC.
All Rights Reserved.

Roof Framing Plan

Project number	26013
Date	06/30/2026
Drawn by	jcj
Checked by	jd

S3.1

Scale As indicated

BJW STRUCTURAL ENGINEERS

BARNETT JONES WILSON, LLC ⊕ PELL CITY ⊕ TUSCALOOSA ⊕ CHATTANOOGA ⊕ WWW.STRUCT-ENGR.COM

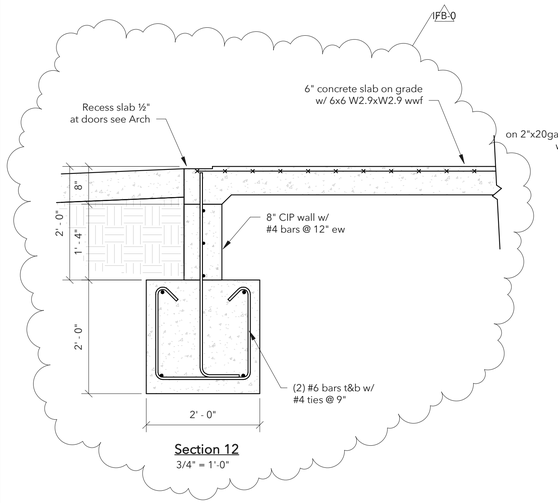

Section 12
3/4" = 1'-0"

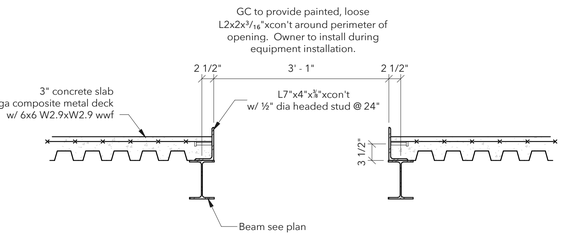

Section 11
3/4" = 1'-0"

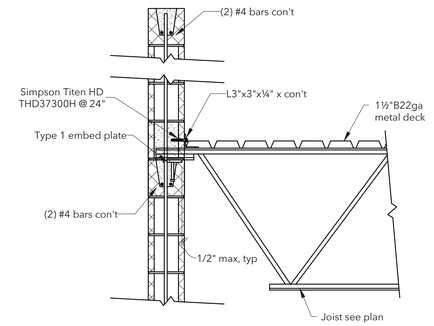

Section 10
3/4" = 1'-0"

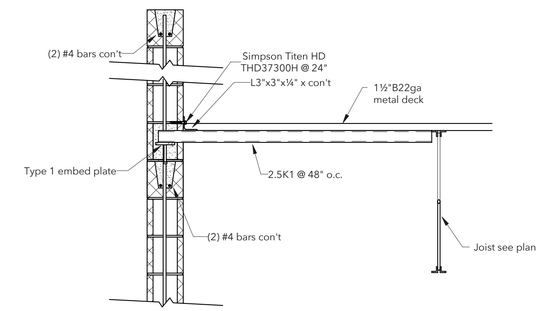

Section 9
3/4" = 1'-0"

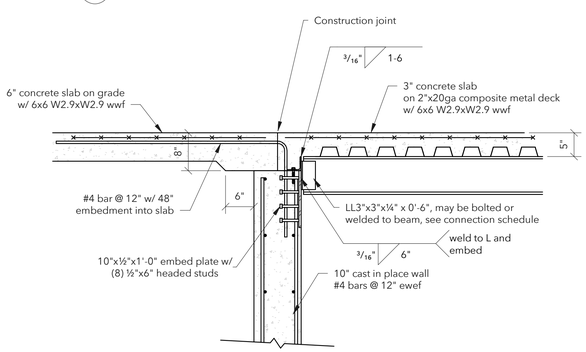

Section 8
3/4" = 1'-0"

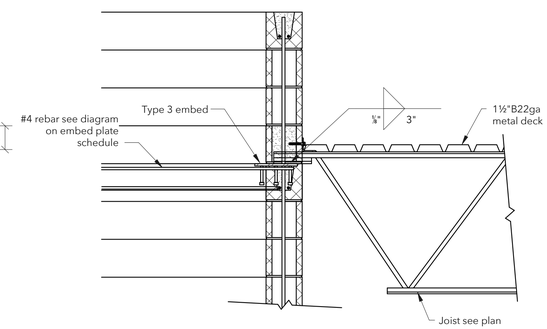

Section 7
3/4" = 1'-0"

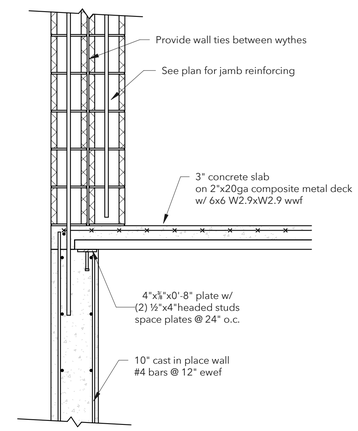

Section 6
3/4" = 1'-0"

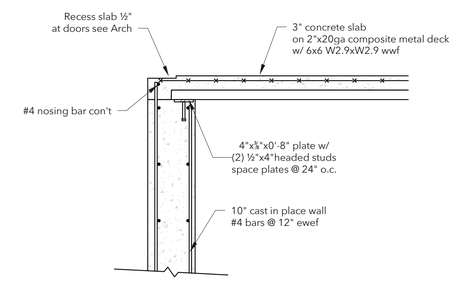

Section 5
3/4" = 1'-0"

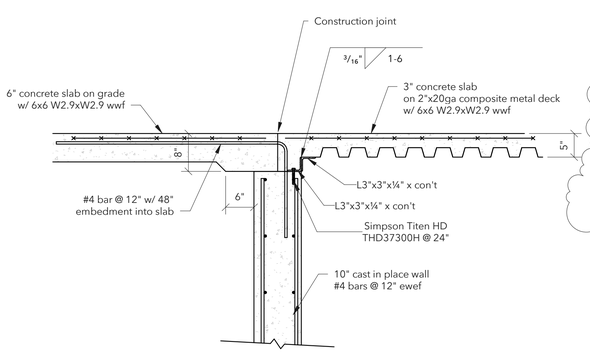

Section 4
3/4" = 1'-0"

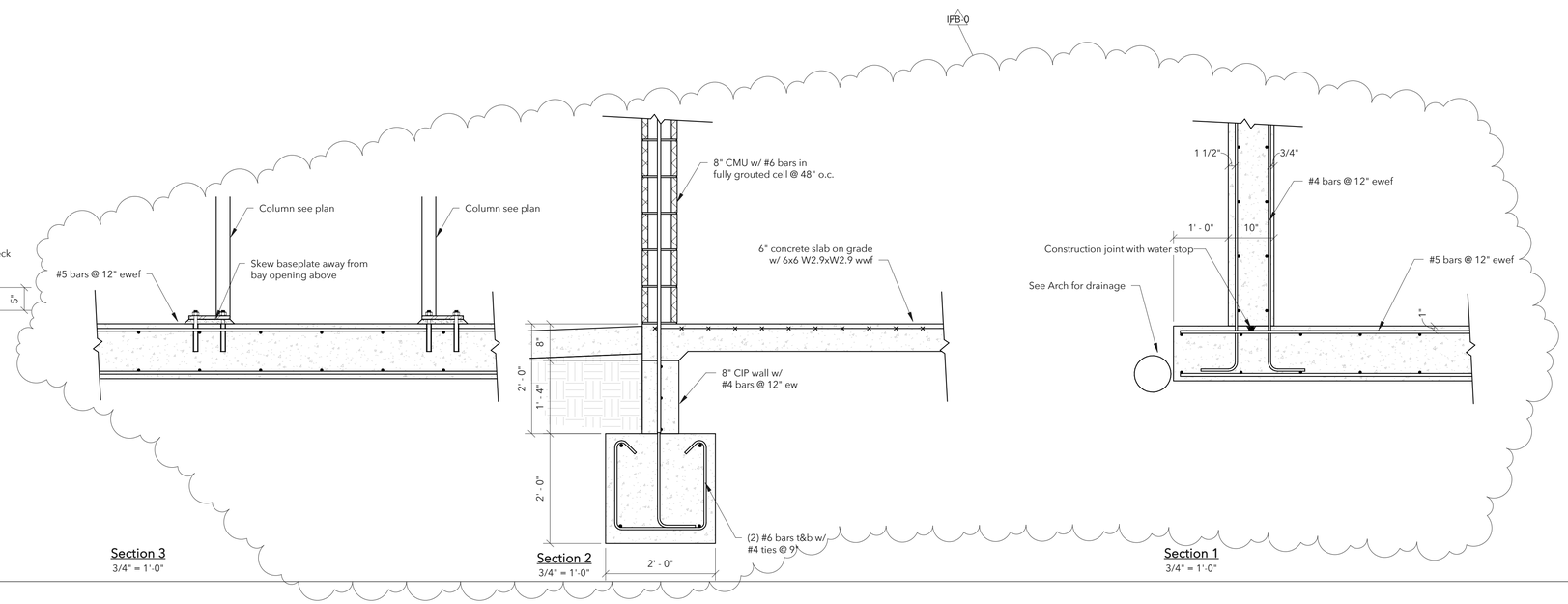

Section 3
3/4" = 1'-0"

Section 2
3/4" = 1'-0"

Section 1
3/4" = 1'-0"

AHO ARCHITECTS, LLC

www.ahoarch.com

08.12.2026

STATE OF TEXAS
JOHN CARTSON JONES
114125
LICENSED
PROFESSIONAL ENGINEER

Express Oil Change & Tire Engineers

Single Building / Right Hand Oil Change / Rear Enter / Side Tire Storage

Cross Roads, Texas (Aubrey)

FINAL

No.	Description	Date
IFP-0	Issue for Permit	06/30/2026
IFB-0	Iss for Bid/AHJ Rev	08/12/2026

© 2026 Aho Architects, LLC. All Rights Reserved.

Sections and Details

Project number	26013
Date	06/30/2026
Drawn by	jcj
Checked by	jd

S5.1

Scale 3/4" = 1'-0"

BJW STRUCTURAL ENGINEERS

BARNETT JONES WILSON, LLC ⊕ PELL CITY ⊕ TUSCALOOSA ⊕ CHATTANOOGA ⊕ WWW.STRUCT-ENGR.COM

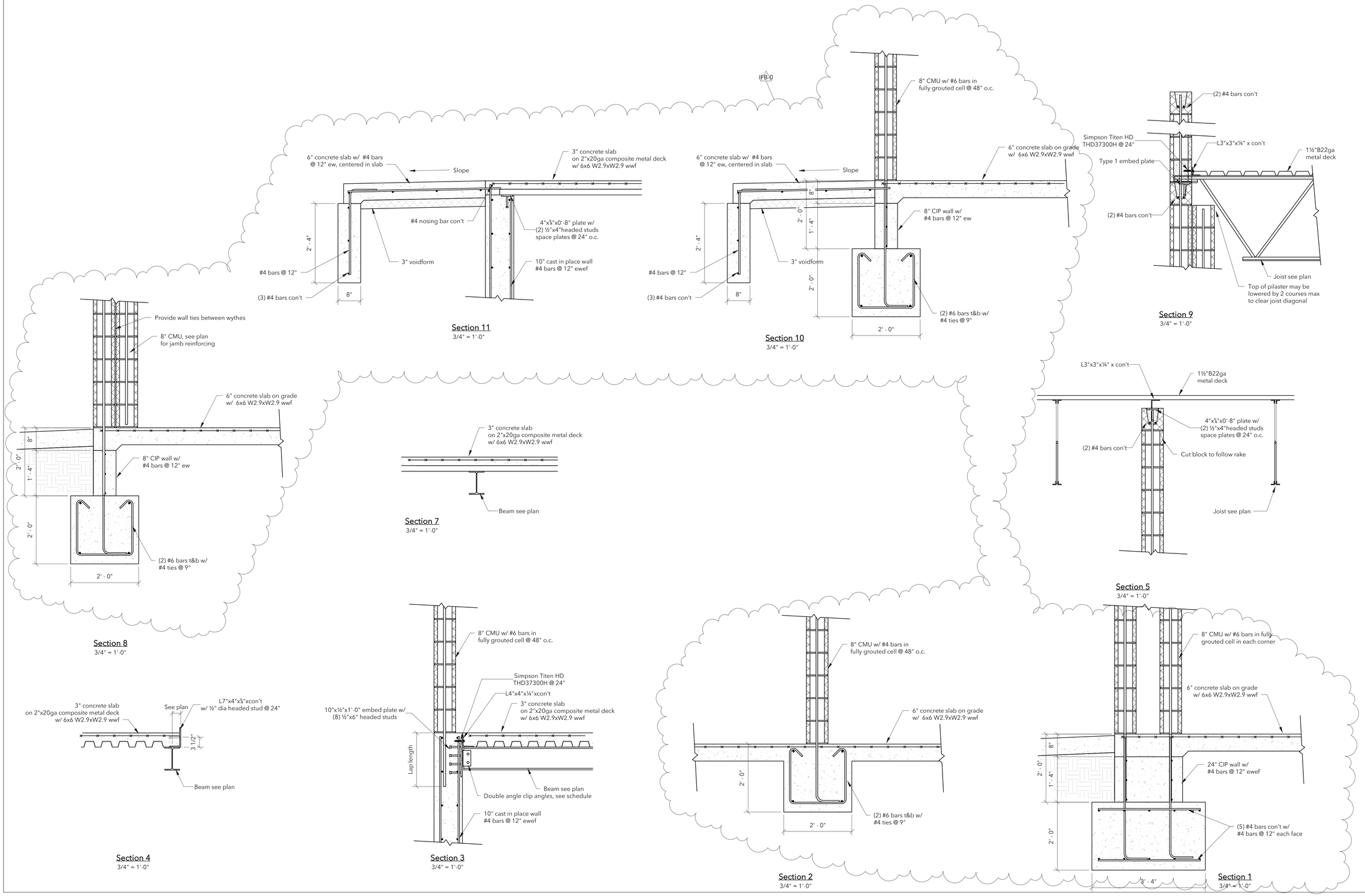

AHO ARCHITECTS, LLC

www.ahoarch.com

08.12.2026

STATE OF TEXAS
JOHN CARTSON JONES
114125
LICENSED
PROFESSIONAL ENGINEER

Express Oil Change & Tire Engineers

Single Building / Right Hand Oil Change / Rear Enter / Side Tire Storage

Cross Roads, Texas (Aubrey)

FINAL

No.	Description	Date
IFP-0	Issue for Permit	06/30/2026
IFB-0	Iss for Bid/AHJ Rev	08/12/2026

© 2026 Aho Architects, LLC. All Rights Reserved.

Sections and Details

Project number	26013
Date	06/30/2026
Drawn by	jcj
Checked by	jd

S5.2

Scale 3/4" = 1'-0"

BJW STRUCTURAL ENGINEERS

BARNETT JONES WILSON, LLC ⊕ PELL CITY ⊕ TUSCALOOSA ⊕ CHATTANOOGA ⊕ WWW.STRUCTENGR.COM

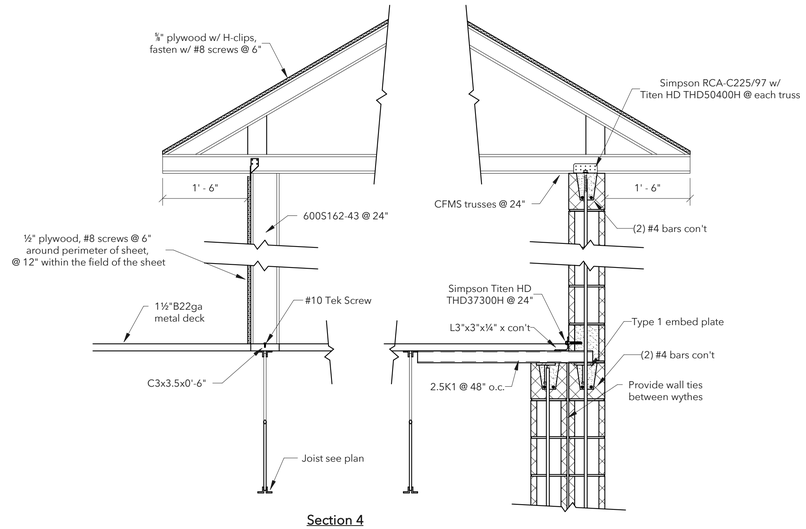

Section 4
3/4" = 1'-0"

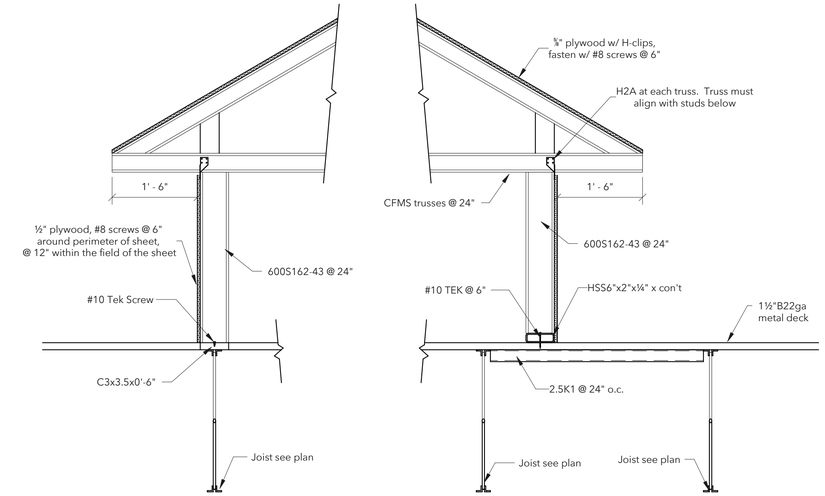

Section 3
3/4" = 1'-0"

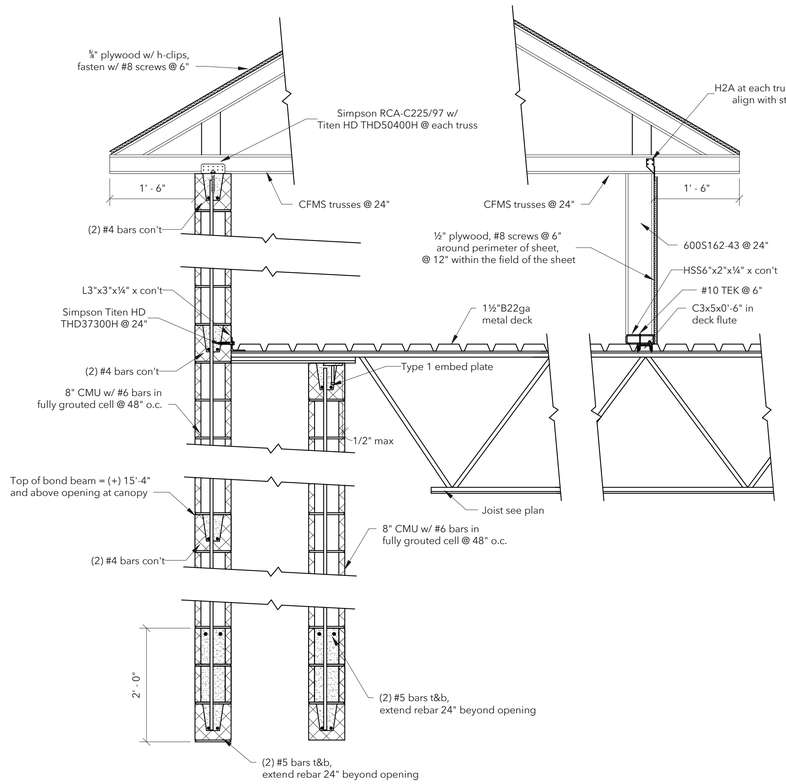

Section 2
3/4" = 1'-0"

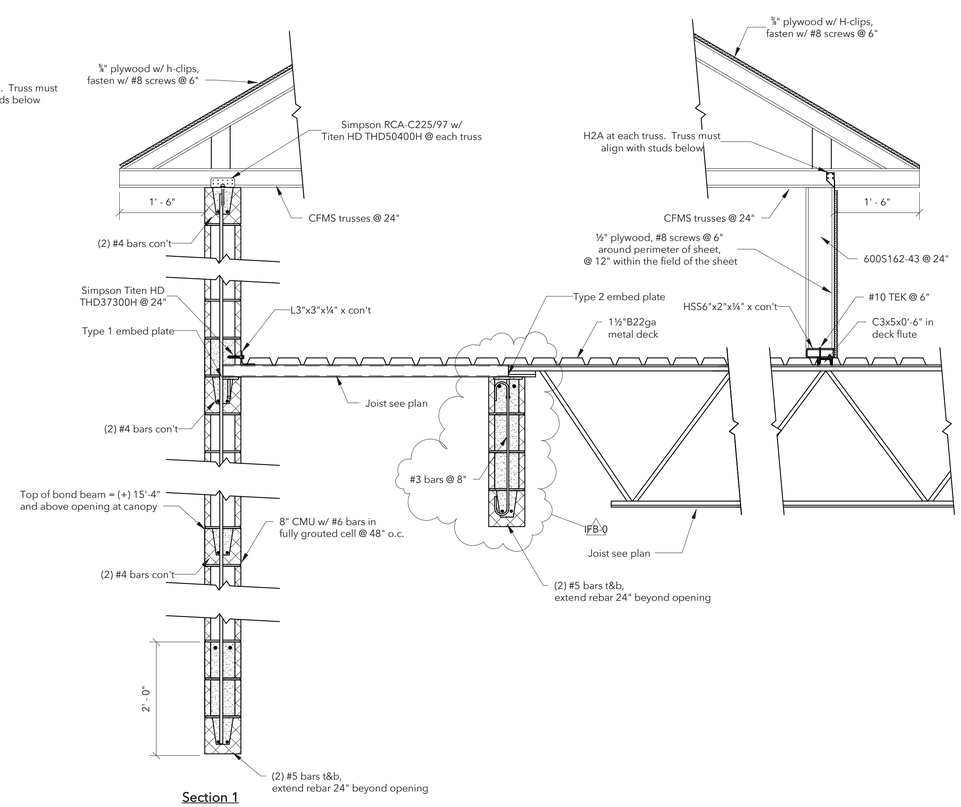

Section 1
3/4" = 1'-0"

AHO ARCHITECTS, LLC

www.ahoarch.com

08.12.2026

STATE OF TEXAS
JOHN CARTSON JONES
114125
LICENSED
PROFESSIONAL ENGINEER

Express Oil Change & Tire Engineers

Single Building / Right Hand Oil Change / Rear Enter / Side Tire Storage

Cross Roads, Texas (Aubrey)

FINAL

No.	Description	Date
IFP-0	Issue for Permit	06/30/2026
IFB-0	Iss for Bid/AHJ Rev	08/12/2026

© 2026 Aho Architects, LLC. All Rights Reserved.

Sections and Details

Project number	26013
Date	06/30/2026
Drawn by	jcj
Checked by	jd

S5.3

Scale 3/4" = 1'-0"

BJW STRUCTURAL ENGINEERS

BARNETT JONES WILSON, LLC ⊕ PELL CITY ⊕ TUSCALOOSA ⊕ CHATTANOOGA ⊕ WWW.STRUCT-ENGR.COM

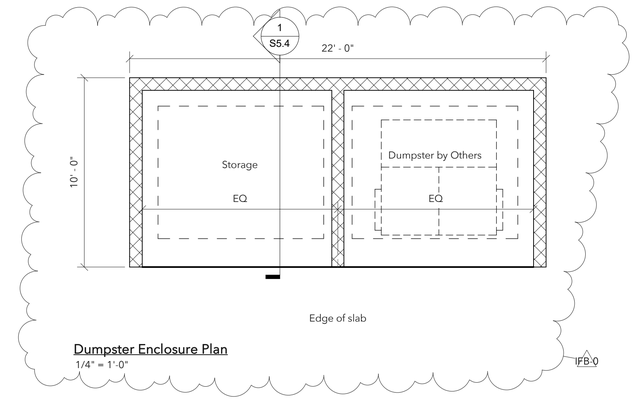

Dumpster Enclosure Plan
1/4" = 1'-0"

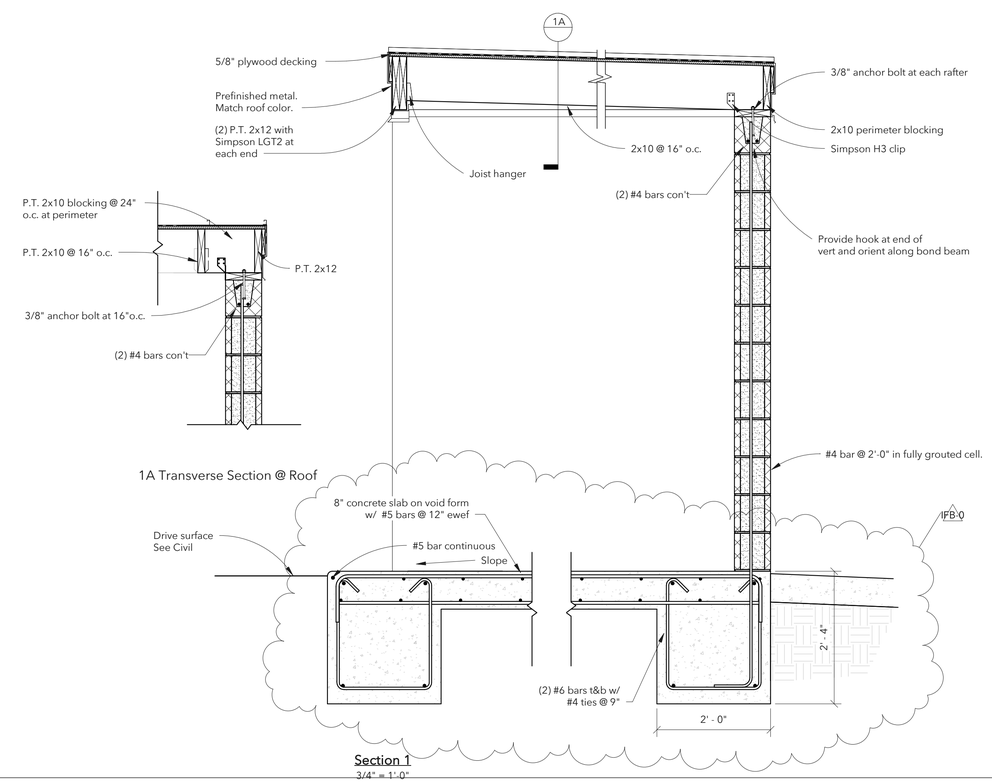

1A Transverse Section @ Roof

Section 1
3/4" = 1'-0"

AHO ARCHITECTS, LLC

www.ahoarch.com

08.12.2026

STATE OF TEXAS
JOHN CARTSON JONES
114125
LICENSED
PROFESSIONAL ENGINEER

Express Oil Change & Tire Engineers

Single Building / Right Hand Oil Change / Rear Enter / Side Tire Storage

Cross Roads, Texas (Aubrey)

FINAL

No.	Description	Date
IFP-0	Issue for Permit	06/30/2026
IFB-0	Iss for Bid/AHJ Rev	08/12/2026

© 2026 Aho Architects, LLC.
All Rights Reserved.

Sections and Details

Project number	26013
Date	06/30/2026
Drawn by	jcj
Checked by	jd

S5.4

Scale As indicated

SECTION 15326 - FIRE-SUPPRESSION SYSTEMS

A. WORK SPECIFIED IN THIS SECTION INCLUDES DESIGN AND INSTALLATION OF A COMPLETE HYDRAULICALLY CALCULATED AUTOMATIC WET SPRINKLER SYSTEM. PROVIDE SPRINKLER HEADS IN ALL AREAS TO INSURE REQUIRED COVERAGE PER NFPA 13. PIPING LAYOUTS AS REQUIRED TO MEET NFPA 13 STANDARDS. PROVIDE TESTING OF SYSTEM.

B. DESIGN AUTOMATIC SPRINKLER SYSTEM AND OBTAIN APPROVAL FROM AUTHORITIES HAVING JURISDICTION. INCLUDE [20 PERCENT] [10 PERCENT] [10 PSI] MARGIN OF SAFETY FOR AVAILABLE WATER FLOW AND PRESSURE. INCLUDE LOSSES THROUGH WATER-SERVICE PIPING, VALVES, AND BACKFLOW PREVENTERS.

C. SPRINKLER OCCUPANCY HAZARD CLASSIFICATIONS:
1. BUILDING SERVICE AREAS: ORDINARY HAZARD, GROUP 1.
2. ELECTRICAL EQUIPMENT ROOMS: ORDINARY HAZARD, GROUP 1.
3. GENERAL STORAGE AREAS (STOCKPILES 10 FT OR LESS): ORDINARY HAZARD, GROUP 2.
4. MECHANICAL EQUIPMENT ROOMS: ORDINARY HAZARD, GROUP 1.
5. OFFICE AND PUBLIC AREAS: LIGHT HAZARD.

IFB-0

D. SYSTEM DENSITY AND DESIGN AREAS SHALL BE PER NFPA 13 AND BASED ON OCCUPANCY DESIGNATIONS. SPRINKLER SPACING SHALL BE PER NFPA 13 UNLESS DIRECTED OTHERWISE WITHIN THE SPRINKLER LISTING OR MANUFACTURER'S REQUIREMENTS. COMPONENTS AND INSTALLATION SHALL BE CAPABLE OF PRODUCING PIPING SYSTEMS WITH 175-PSIG MINIMUM WORKING-PRESSURE RATING, UNLESS OTHERWISE INDICATED.

E. SUBMITTAL SHALL BE MADE TO THE ARCHITECT AT THE SAME TIME IT IS MADE TO THE AUTHORITY HAVING JURISDICTION. SUBMIT SIX (6) SETS OF SHOP DRAWINGS, INDICATING ALL PHASES OF THE INSTALLATION, PIPE ROUTING, EQUIPMENT LAYOUTS, ELEVATIONS, SECTIONS AND DETAILS FOR APPROVAL. REVISIONS SHALL BE MADE FOR COMMENTS AND RESUBMITTED FOR APPROVAL. NO WORK IS TO BEGIN UNTIL APPROVALS HAVE BEEN GIVEN IN WRITING.

F. A FIRE-HYDRANT FLOW TEST SHALL BE PERFORMED BY CONTRACTOR AS A BASIS FOR HYDRAULICALLY CALCULATED SYSTEMS. TESTING SHALL BE CONDUCTED AT A LOCATION REPRESENTATIVE OF THE ACTUAL FUTURE SYSTEM SUPPLY AND BE NO MORE THAN ONE YEAR OLD AT THE DATE OF SUBMISSION. .

G. INDICATE AND INTERPRET TEST RESULTS FOR COMPLIANCE WITH PERFORMANCE REQUIREMENTS AND AS DESCRIBED IN NFPA 13. INCLUDE "CONTRACTOR'S MATERIAL AND TEST CERTIFICATE FOR ABOVEGROUND PIPING" AND "CONTRACTOR'S MATERIAL AND TEST CERTIFICATE FOR UNDERGROUND PIPING." INSTALL LABELING AND PIPE MARKERS ON EQUIPMENT AND PIPING ACCORDING TO REQUIREMENTS IN NFPA 13

H. INSTALLER SHALL BE LICENSED BY THE STATE IN WHICH THE PROJECT IS LOCATED TO INSTALL FIRE PROTECTION SYSTEMS, DESIGNED AND INSTALLED FIRE-SUPPRESSION SYSTEMS SIMILAR TO THAT INDICATED FOR THIS PROJECT, AND OBTAINED DESIGN APPROVAL AND INSPECTION APPROVAL FROM AUTHORITIES HAVING JURISDICTION.

I. CONTRACTOR'S WORKING PLANS, CALCULATIONS, AND FIELD TEST REPORTS SHALL BE PREPARED BY THE CONTRACTOR'S PROFESSIONAL ENGINEER. BASE CALCULATIONS ON RESULTS OF FIRE-HYDRANT FLOW TEST. CONTRACTOR'S PROFESSIONAL ENGINEER SHALL BE LEGALLY QUALIFIED TO PRACTICE IN JURISDICTION WHERE PROJECT IS LOCATED.

J. FURNISH EXTRA MATERIALS THAT MATCH PRODUCTS INSTALLED AND THAT ARE PACKAGED WITH PROTECTIVE COVERING FOR STORAGE AND IDENTIFIED WITH LABELS DESCRIBING CONTENTS. MATERIALS SHALL INCLUDE A SPRINKLER CABINETS: FINISHED, WALL-MOUNTING STEEL CABINET AND HINGED COVER, WITH SPACE FOR A MINIMUM OF SIX SPARE SPRINKLERS PLUS SPRINKLER WRENCH. INCLUDE THE NUMBER OF SPRINKLERS REQUIRED BY NFPA 13 AND WRENCH FOR SPRINKLERS. INCLUDE SEPARATE CABINET WITH SPRINKLERS AND WRENCH FOR EACH TYPE OF SPRINKLER ON PROJECT.

K. PIPE AND FITTINGS:
1. SCHEDULE 10 STEEL PIPE: ASTM A135 OR ASTM A795, SCHEDULE 10 IN NPS 5 AND SMALLER AND NFPA 13 SPECIFIED WALL THICKNESS IN NPS 6 OR LARGER.
2. FITTINGS SHALL BE ASTM A47, MALLEABLE-IRON OR ASTM A 536, DUCTILE-IRON CASTING COMPLYING WITH AWWA PIPE SIZE; WITH ENDS FACTORY GROOVED ACCORDING TO AWWA C606. CAST-IRON THREADED FITTINGS CONFORMING TO ASME B16.4. MALLEABLE-IRON THREADED FITTINGS CONFORMING TO ASME B16.3. STEEL, THREADED COUPLINGS CONFORMING TO ASTM A 865. STEEL WELDING FITTINGS CONFORMING TO ASTM A 234/A 234M, ASME B16.9, OR ASME B16.11.
3. STEEL FLANGES AND FLANGED FITTINGS SHALL CONFORM WITH ASME B16.5.
4. STEEL, GROOVED-END FITTINGS SHALL BE UL-LISTED AND FM-APPROVED, ASTM A 47, MALLEABLE IRON OR ASTM A 536, DUCTILE IRON; WITH DIMENSIONS MATCHING STEEL PIPE AND ENDS FACTORY GROOVED ACCORDING TO AWWA C606.
5. JOINING MATERIALS SHALL MATCH FITTING TYPES.

L. FIRE PROTECTION SERVICE VALVES:
1. VALVES SHALL BE UL LISTED AND FM APPROVED, WITH MINIMUM 175-PSIG NONSHOCK WORKING-PRESSURE RATING. VALVES FOR GROOVED-END PIPING MAY BE FURNISHED WITH GROOVED ENDS INSTEAD OF TYPE OF ENDS SPECIFIED.
2. GATE VALVES, NPS 2 AND SMALLER: UL 262; CAST-BRONZE, THREADED ENDS; SOLID WEDGE; OS&Y; AND RISING STEM.
3. GATE VALVES, NPS 2-½ AND LARGER: UL 262, IRON BODY, BRONZE MOUNTED, TAPER WEDGE, OS&Y, AND RISING STEM. INCLUDE REPLACEABLE, BRONZE, WEDGE FACING RINGS AND FLANGED ENDS.
4. INDICATING VALVES, NPS 2-½ AND SMALLER: UL 1091; BUTTERFLY OR BALL-TYPE, BRONZE BODY WITH THREADED ENDS; AND INTEGRAL INDICATING DEVICE. PROVIDE WITH VISUAL AND ELECTRICAL INDICATOR WITH SUPERVISORY SWITCH.
5. SWING CHECK VALVES, NPS 2 AND SMALLER: UL 312 OR MSS SP-80, CLASS 150; BRONZE BODY WITH BRONZE DISC AND THREADED ENDS.
6. SWING CHECK VALVES, NPS 2-½ AND LARGER: UL 312, CAST-IRON BODY AND BOLTED CAP, WITH BRONZE DISC OR CAST-IRON DISC WITH BRONZE-DISC RING AND FLANGED ENDS.
7. SPLIT-CLAPPER CHECK VALVES, NPS 4 AND LARGER: UL 312, CAST-IRON BODY WITH RUBBER SEAL, BRONZE-ALLOY DISCS, AND STAINLESS-STEEL SPRING AND HINGE PIN.

M. ALARM CHECK VALVES: UL 193, 250-PSIG WORKING PRESSURE; DESIGNED FOR HORIZONTAL OR VERTICAL INSTALLATION, WITH CAST-IRON FLANGED INLET AND OUTLET, BRONZE GROOVED SEAT WITH O-RING SEALS, AND SINGLE-HINGE PIN AND LATCH DESIGN. VALVE TRIM SHALL BE EXTERNALLY GALVANIZED AND HAVE A MAXIMUM WORKING PRESSURE OF 250-PSIG. INCLUDE TRIM SETS FOR BYPASS, DRAIN, ELECTRIC SPRINKLER ALARM SWITCH, PRESSURE GAGES, RETARDING CHAMBER, AND FILL-LINE ATTACHMENT WITH STRAINER. VALVE SHALL BE VIKING CORP MODEL J-1 OR EQUAL. PIPE DRAIN WITH CHECK VALVE TO MAIN DRAIN PIPING.

N. SPRINKLERS:
1. STORE SPRINKLER SY STEM COMPONENTS IN THEIR ORIGINAL SHIPPING CONTAINER, IN A CLEAN, DRY SPACE PROTECTED FROM WEATHER. UNTIL COMPLETION OF ALL FINISH-OUT, PROTECTIVE CAPS SHALL NOT BE REMOVED FROM CONCEALED SPRINKLERS OR COVER PLATES INSTALLED. ANY PAINTED SPRINKLERS OR COVER PLATES SHALL BE REPLACED.
2. FIRE SPRINKLERS SHALL BE OF ONE MANUFACTURER THROUGHOUT THE BUILDING. NO MIXING OF SPRINKLER BRANDS SHALL BE PERMITTED. SPRINKLERS SHALL BE OF ALL BRASS FRAME CONSTRUCTION UTILIZING A METAL BELLEVILLE SPRING SEAL, COATED ON BOTH SIDES WITH TEFLON FILM. UTILIZATION OF NON-METAL PARTS IN THE SEALING PORTION OF THE SPRINKLER IS STRICTLY PROHIBITED. AUTOMATIC SPRINKLERS SHALL BE EQUIPPED WITH HEAT-RESPONSIVE ELEMENT COMPLYING WITH UL 199 OR UL 1767, FOR EARLY SUPPRESSION, FAST-RESPONSE APPLICATIONS.
a) ESCUTCHEONS FOR CONCEALED, FLUSH, AND RECESSED-TYPE SPRINKLERS ARE SPECIFIED WITH SPRINKLERS. CONCEALED SPRINKLERS SHALL HAVE A COVER PLATE THAT IS A PUSH-ON, THREAD-OFF DESIGN THAT ALLOWS FOR UP TO ½" OF ADJUSTMENT AND HAVE A DIAMETER NO GREATER THAN 2-3/4".

O. SPECIALTY SPRINKLER FITTINGS:
1. SPECIALTY FITTINGS: UL LISTED AND FM APPROVED; MADE OF STEEL, DUCTILE IRON, OR OTHER MATERIALS COMPATIBLE WITH PIPING.
2. DROP-NIPPLE FITTINGS: UL 1474, WITH THREADED INLET, THREADED OUTLET, AND SEALS; ADJUSTABLE.
3. SPRINKLER, DRAIN AND ALARM TEST FITTINGS: UL-LISTED, CAST- OR DUCTILE-IRON BODY; WITH THREADED INLET AND OUTLET, TEST VALVE, AND ORIFICE AND SIGHT GLASS.
4. SPRINKLER, BRANCH-LINE TEST FITTINGS: UL-LISTED, BRASS BODY; WITH THREADED INLET AND CAPPED DRAIN OUTLET AND THREADED OUTLET FOR SPRINKLER.
5. SPRINKLER, INSPECTOR'S TEST FITTINGS: PROVIDE AS REQUIRED. UL-LISTED, CAST- OR DUCTILE-IRON HOUSING; WITH THREADED INLET AND DRAIN OUTLET AND SIGHT GLASS.

P. FIRE DEPARTMENT CONNECTIONS:
1. WALL, FIRE DEPARTMENT CONNECTIONS: UL 405; CAST-BRASS BODY WITH BRASS, WALL, ESCUTCHEON PLATE; BRASS, LUGGED CAPS WITH GASKETS AND BRASS CHAINS; AND BRASS, LUGGED SWIVEL CONNECTIONS. INCLUDE INLETS WITH THREADS ACCORDING TO NFPA 1963 AND MATCHING LOCAL FIRE DEPARTMENT SIZES AND THREADS, OUTLET WITH PIPE THREADS, EXTENSION PIPE NIPPLES, CHECK DEVICES OR CLAPPERS FOR INLETS, AND ESCUTCHEON PLATE WITH PERMANENT DESCTIPTIVE MARKING APPROPRIATE TO SYSTEM SERVED. FDC SHALL POLISHED BRASS FINISH AND INCLUDE FLUSH OR EXPOSED PROJECTING MOUNTING AS INDICATED ON PLANS AND ESCUTCHEON PLATE
2. EXPOSED, FREESTANDING, FIRE DEPARTMENT CONNECTIONS: UL 405, CAST-BRASS BODY, INLETS WITH THREADS ACCORDING TO NFPA 1963 AND MATCHING LOCAL FIRE DEPARTMENT SIZES AND THREADS, AND BOTTOM OUTLET WITH PIPE THREADS. INCLUDE BRASS, LUGGED CAPS, GASKETS, AND BRASS CHAINS; BRASS, LUGGED SWIVEL CONNECTION AND DROP CLAPPER FOR EACH HOSE-CONNECTION INLET; 18-INCH- HIGH BRASS SLEEVE; AND ROUND, FLOOR, BRASS, ESCUTCHEON PLATE WITH PERMANENT DESCTIPTIVE MARKING APPROPRIATE TO SYSTEM SERVED. FINISH SHALL BE POLISHED BRASS.

Q. ALARM DEVICES:
1. ELECTRONIC WATER FLOW ALARM: ALARM SHALL BE POTTER ELECTRIC HORN STROBE MODEL SASH-120, 120 VAC OR EQUAL BY SYSTEM SENSOR.
2. WATER-FLOW INDICATORS: UL 346; ELECTRICAL-SUPERVISION, VANE-TYPE WATER-FLOW DETECTOR; WITH 250-PSIG PRESSURE RATING; AND DESIGNED FOR HORIZONTAL OR VERTICAL INSTALLATION. INCLUDE TWO SINGLE-POLE, DOUBLE-THROW, CIRCUIT SWITCHES FOR ISOLATED ALARM AND AUXILIARY CONTACTS, 7 A, 125-V AC AND 0.25 A, 24-V DC; COMPLETE WITH FACTORY-SET, FIELD-ADJUSTABLE RETARD ELEMENT TO PREVENT FALSE SIGNALS AND TAMPERPROOF COVER THAT SENDS SIGNAL IF REMOVED.
3. PRESSURE SWITCHES: UL 753; ELECTRICAL-SUPERVISION-TYPE, WATER-FLOW SWITCH WITH RETARD FEATURE. INCLUDE SINGLE-POLE, DOUBLE-THROW, NORMALLY CLOSED CONTACTS AND DESIGN THAT OPERATES ON RISING PRESSURE AND SIGNALS WATER FLOW.
4. VALVE SUPERVISORY SWITCHES: UL 753; ELECTRICAL; SINGLE-POLE, DOUBLE THROW; WITH NORMALLY CLOSED CONTACTS. INCLUDE DESIGN THAT SIGNALS CONTROLLED VALVE IS IN OTHER THAN FULLY OPEN POSITION.

R. PRESSURE GAGES:
1. PRESSURE GAGES: UL 393, 3-1/2- TO 4-1/2-INCH DIAMETER DIAL WITH DIAL RANGE OF 0 TO 250 PSIG.

S. SERVICE ENTRANCE PIPING:
1. CONNECT STANDPIPE AND SPRINKLER PIPING TO WATER-SERVICE PIPING OF SIZE AND IN LOCATION INDICATED FOR SERVICE ENTRANCE TO BUILDING. INSTALL SHUTOFF VALVE, BACKFLOW PREVENTER, PRESSURE GAGE, DRAIN, AND OTHER ACCESSORIES INDICATED AT CONNECTION TO WATER-SERVICE PIPING. INSTALL SHUTOFF VALVE, CHECK VALVE, PRESSURE GAGE, DRAIN, AND OTHER ACCESSORIES AT CONNECTION TO WATER SERVICE.

T. PIPING INSTALLATION:
1. INSTALL UNDERGROUND SERVICE-ENTRANCE PIPING ACCORDING TO NFPA 24 AND WITH RESTRAINED JOINTS.
2. USE APPROVED FITTINGS TO MAKE CHANGES IN DIRECTION, BRANCH TAKEOFFS FROM MAINS, AND REDUCTIONS IN PIPE SIZES. INSTALL UNIONS ADJACENT TO EACH VALVE IN PIPES NPS 2 AND SMALLER. UNIONS ARE NOT REQUIRED ON FLANGED DEVICES OR IN PIPING INSTALLATIONS USING GROOVED JOINTS. INSTALL FLANGES OR FLANGE ADAPTERS ON VALVES, APPARATUS, AND EQUIPMENT HAVING NPS 2-½ AND LARGER CONNECTIONS.
3. INSTALL "INSPECTOR'S TEST CONNECTIONS" IN SPRINKLER PIPING AS REQUIRED, COMPLETE WITH SHUTOFF VALVE, SIZED AND LOCATED ACCORDING TO NFPA 13. INSTALL SPRINKLER PIPING WITH DRAINS FOR COMPLETE SYSTEM DRAINAGE.
4. INSTALL SPRINKLER ZONE CONTROL VALVES, TEST ASSEMBLIES, AND DRAIN RISERS ADJACENT TO STANDPIPES WHEN SPRINKLER PIPING IS CONNECTED TO STANDPIPES. INSTALL DRAIN VALVES ON STANDPIPES.
5. INSTALL BALL DRIP VALVES TO DRAIN PIPING BETWEEN FIRE DEPARTMENT CONNECTIONS AND CHECK VALVES. DRAIN TO FLOOR DRAIN OR OUTSIDE BUILDING.
6. INSTALL ALARM DEVICES IN PIPING SYSTEMS.
7. HANGERS AND SUPPORTS: COMPLY WITH NFPA 13 FOR HANGER MATERIALS. INSTALL ACCORDING TO NFPA 13 FOR SPRINKLER PIPING.
8. INSTALL PIPING WITH GROOVED JOINTS ACCORDING TO MANUFACTURER'S WRITTEN INSTRUCTIONS. CONSTRUCT RIGID PIPING JOINTS, UNLESS OTHERWISE INDICATED.
9. INSTALL PRESSURE GAGES ON RISER OR FEED MAIN, AT EACH SPRINKLER TEST CONNECTION, AND AT TOP OF EACH STANDPIPE. INSTALL GAGES TO PERMIT REMOVAL AND INSTALL WHERE THEY WILL NOT BE SUBJECT TO FREEZING.

U. VALVE INSTALLATION:
1. O S & Y VALVES: INSTALL FIRE-PROTECTION-SERVICE VALVES SUPERVISED-OPEN, LOCATED TO CONTROL SOURCES OF WATER SUPPLY EXCEPT FROM FIRE DEPARTMENT CONNECTIONS. PROVIDE PERMANENT IDENTIFICATION SIGNS INDICATING PORTION OF SYSTEM CONTROLLED BY EACH VALVE.
2. INSTALL CHECK VALVE IN EACH WATER-SUPPLY CONNECTION. INSTALL BACKFLOW PREVENTERS INSTEAD OF CHECK VALVES IN POTABLE-WATER SUPPLY SOURCES.
3. ALARM CHECK VALVES: INSTALL VALVES IN VERTICAL POSITION FOR PROPER DIRECTION OF FLOW, INCLUDING BYPASS CHECK VALVE AND RETARD CHAMBER DRAIN-LINE CONNECTION.

V. SPRINKLER INSTALLATION:
1. INSTALL SPRINKLERS IN ACCORDANCE WITH MANUFACTURER'S LISTING. INSTALL SPRINKLERS IN SUSPENDED CEILINGS IN CENTER OF ACOUSTICAL PANELS AND TILES. INSTALL SPRINKLERS IN SUSPENDED CEILINGS IN CENTER OF NARROW DIMENSION OF ACOUSTICAL PANELS. DO NOT INSTALL PENDENT OR SIDEWALL, WET-TYPE SPRINKLERS IN AREAS SUBJECT TO FREEZING. USE DRY-TYPE SPRINKLERS WITH WATER SUPPLY FROM HEATED SPACE.

W. TESTING AND STARTUP:
1. FLUSH, TEST, AND INSPECT SPRINKLER PIPING ACCORDING TO NFPA 13, "SYSTEM ACCEPTANCE" CHAPTER. REPLACE PIPING SYSTEM COMPONENTS THAT DO NOT PASS TEST PROCEDURES AND RETEST TO DEMONSTRATE COMPLIANCE. REPEAT PROCEDURE UNTIL SATISFACTORY RESULTS ARE OBTAINED. REPORT TEST RESULTS PROMPTLY AND IN WRITING TO ARCHITECT AND AUTHORITIES HAVING JURISDICTION.
2. CLEAN DIRT AND DEBRIS FROM SPRINKLERS. REMOVE AND REPLACE SPRINKLERS HAVING PAINT OTHER THAN FACTORY FINISH. PROTECT SPRINKLERS FROM DAMAGE UNTIL ALL FINISH-OUT OPERATIONS HAVE BEEN COMPLETED.
3. VERIFY THAT SPECIALTY VALVES, TRIM, FITTINGS, CONTROLS, AND ACCESSORIES ARE INSTALLED AND OPERATE CORRECTLY. VERIFY THAT SPECIFIED TESTS OF PIPING ARE COMPLETE. VERIFY THAT SPRINKLERS ARE CORRECT TYPES, HAVE CORRECT FINISHES AND TEMPERATURE RATINGS. VERIFY THAT DAMAGED SPRINKLERS AND SPRINKLERS WITH PAINT OR COATING NOT SPECIFIED ARE REPLACED WITH NEW, CORRECT TYPE. VERIFY THAT POTABLE-WATER SUPPLIES HAVE CORRECT TYPES OF BACKFLOW PREVENTERS.
4. FILL WET-PIPE SPRINKLER PIPING WITH WATER. ENERGIZE CIRCUITS TO ELECTRICAL EQUIPMENT AND DEVICES. ADJUST OPERATING CONTROLS AND PRESSURE SETTINGS. COORDINATE WITH FIRE ALARM TESTS. DEMONSTRATE EQUIPMENT, SPECIALTIES, AND ACCESSORIES. REVIEW OPERATING AND MAINTENANCE INFORMATION. SCHEDULE DEMONSTRATION WITH OWNER WITH AT LEAST SEVEN DAYS' ADVANCE NOTICE.

AIR COMPRESSOR SCHEDULE

EQUIPMENT NO.	MANUFACTURER AND MODEL NO.	SERVICE	TYPE	RECEIVER TANK CAPACITY (GAL)	DIMENSIONS			VIBRATION ISOLATION			ELECTRICAL				REMARKS
					LENGTH (IN)	WIDTH (IN)	HEIGHT (IN)	TYPE	DEFLECTION (IN)	BASE	DISCONNECT	MOTOR STARTER	MOTOR		
													HP	VOLTS/PH/HZ	
FAC-1	GENERAL AIR OLRV400-A	DRY PIPE SYSTEM	OIL LESS	--	17.3	9.2	8.2	--	--	--	BY DIV. 26	BY DIV. 21	1/2	208 / 1 / 60	1), 2)

REMARKS:
1) COMPRESSOR SIZED FOR MAX. VOLUME OF 250 GALLONS. FINAL SIZE MAY BE SMALLER ONCE EXACT VOLUME OF DRY PIPE SYSTEM IS DETERMINED
2) RISER MOUNTED COMPRESSOR

Pinnacle ENGINEERING, INC
Engineering & Design Consultants
2031 Shady Crest Dr
Birmingham, AL 35216
(205) 733-6912 FAX: (205) 733-6913
Job No.26152

FIRE PROTECTION ZONE SCHEDULE

ZONE NO.	ZONE COVERAGE	SQUARE FOOTAGE	SYSTEM TYPE	SUPPLY SOURCE	NFPA CLASSIFICATIONS			SPRINKLER		REMARKS
					OCCUPANCY	GROUP	SPECIAL COMBUSTIBLE CLASSIFICATIONS (COMMODITIES)	STYLE	TEMPERATURE	
ZONE 1	STORAGE 12	APPROX. 500	DRY	8" SITE MAIN	EXTRA	--	HIGH-PILED	PENDANT	ORDINARY	1), 2), 3)
ZONE 2	REMAINDER OF BUILDING	APPROX. 4930	DRY	8" SITE MAIN	ORDINARY	2	--	VARIES	ORDINARY	1), 3)

REMARKS:
1) CONTRACTOR SHALL ARRANGE SPRINKLERS IN AREAS AS REQUIRED IN NFPA-13.
2) UPRIGHT SPRINKLER HEADS SHALL BE INSTALLED.
3) ALL SPRINKLER HEADS SHALL BE QUICK RESPONSE TYPE.

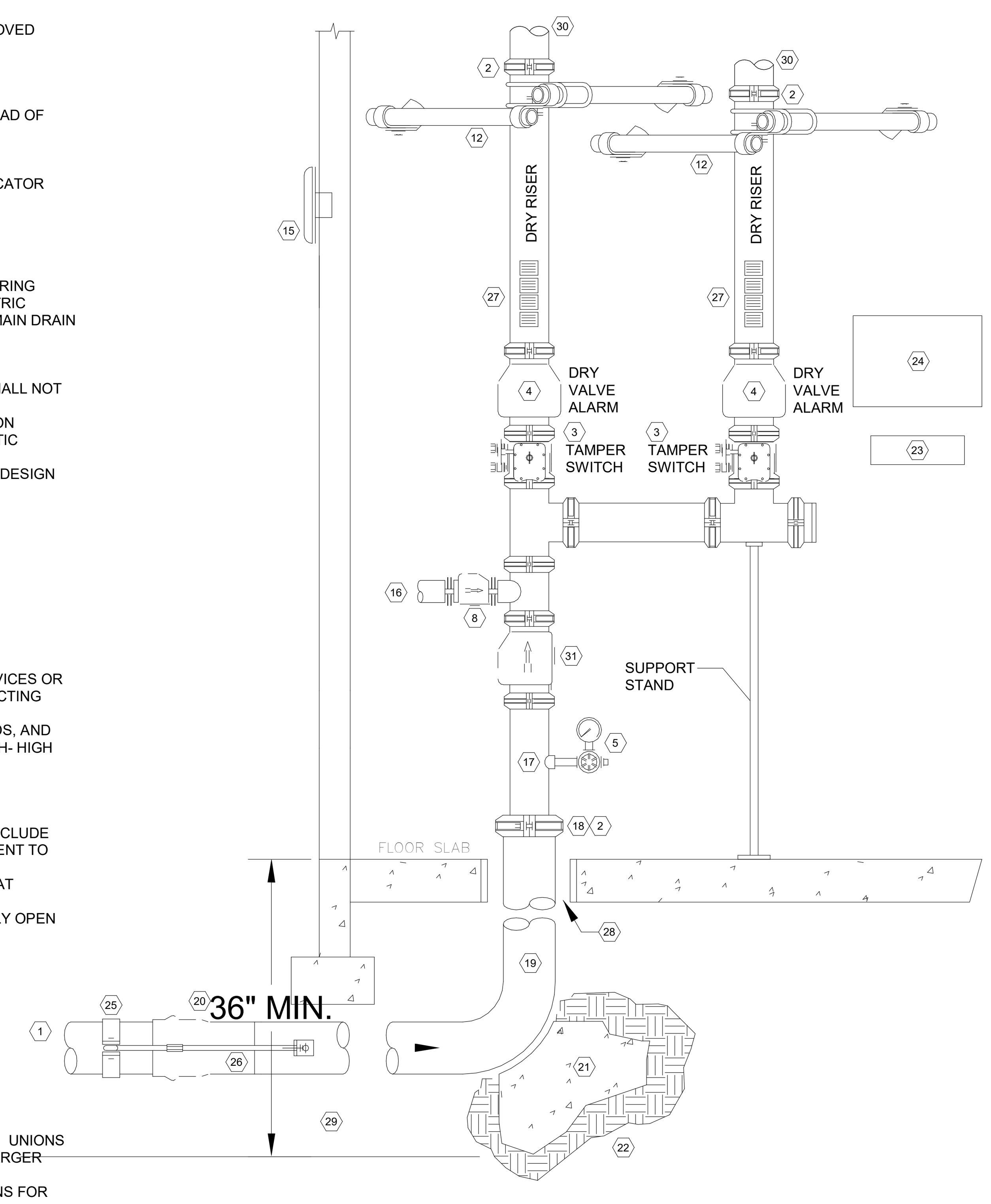

4 FP0.01 FIRE PROTECTION RISER DIAGRAM
NO SCALE

DRAWING NOTES:
1. WATER SUPPLY FROM CITY WATER MAIN. REFER TO SITE UTILITY PLAN FOR CONTINUATION.
2. USE FLEXIBLE GROOVED PIPE COUPLING WHEN SEISMIC BRACING IS REQUIRED. REFER TO DRAWING NOTE 12.
3. GROOVED BUTTERFLY VALVE WITH INTEGRAL SUPERVISORY SWITCH.
4. DRY SYSTEM VALVE. PROVIDE ASSOCIATED DRAIN AIR AIR PIPING.
5. PRESSURE GAUGE WITH ISOLATION VALVE.
6. NOT USED
7. NOT USED
8. SWING CHECK VALVE
9. NOT USED
10. NOT USED
11. NOT USED
12. SEISMIC BRACING SHALL BE REQUIRED FOR SEISMIC DESIGN CATEGORY C, D, E, AND F. REFER TO STRUCTURAL PLANS FOR SDC CLASSIFICATION.
13. 1/2" AUTOMATIC BALL DRIP VALVE
14. NOT USED
15. WEATHERPROOF ELECTRIC BELL OR HORN AND STROBE
16. OUT TO REMOTE FIRE DEPARTMENT CONNECTION WITH GALVANIZED SCH 40 PIPING - PROVIDE BALL DRIP WHEN TRAPPING PIPE SIZE CONNECTION AS REQUIRED. PROVIDE 1/2" AUTOMATIC BALL DRIP VALVE. SEE FLOOR PLAN, SHEET FP1.01.
17. GALVANIZED SPOOL PIECE WITH PRESSURE GAUGE
18. REDUCING GROOVED COUPLING OR CONCENTRIC GROOVED REDUCER
19. AMES STAINLESS STEEL "IN-BUILDING-RISER", MINIMUM 6" SIZE
20. TYTON JOINT PIPE CONNECTION WITH GASKET
21. CONCRETE THRUST BLOCK WITH 8 SQ. FEET HORIZONTAL BEARING AREA (MINIMUM)
22. UNDISTURBED EARTH
23. DEVICE CABINET WITH SPARE SPRINKLER HEADS AND WRENCHES.
24. LAMINATED SYSTEM MAP WITH SYSTEM START-UP AND SHUT-DOWN INSTRUCTIONS.
25. GALVANIZED STEEL RETAINER CLAMP
26. GALVANIZED STEEL RODS SIZED PER NFPA 24. PROVIDE WASHERS, ROD COUPLINGS, AND ALL-THREAD RODS WITH DOUBLE HEX NUTS.
27. HYDRAULIC CALCULATION PLACARDS
28. PROVIDE SLEEVE WHERE PIPING PENETRATES BUILDING AT FLOOR. SEAL AROUND PENETRATION WITH FLEXIBLE MASTIC. PROVIDE 2" ANNULAR SPACE AROUND PIPING.
29. ALL BURIED STEEL COMPONENTS SHALL BE PROTECTED FROM CORROSION BY THE TAR AND WRAPPED METHOD. GALVANIZED STEEL COMPONENTS ARE NOT EXEMPT FROM THIS REQUIREMENT.
30. SUPPLY TO DRY PIPE FIRE SPRINKLER SYSTEM
31. RISER CHECK VALVE

FIRE PROTECTION LEGEND

—FP—	FIRE PROTECTION PIPING
	FLOW SWITCH
	INSPECTOR'S TEST VALVE
	VALVE WITH TAMPER SWITCH
●	PENDENT SPRINKLER HEAD
⊗	CONCEALED SPRINKLER WITH WHITE COVER PLATE
⊘	SEMI-RECESSED SPRINKLER HEAD
○	UPRIGHT SPRINKLER HEAD

CONTRACTOR SHALL PROVIDE FIELD CONDUCTED FLOW TEST PRIOR TO BID:

LOCATION: ____________________

STATIC PRESSURE: ____________________

RESIDUAL PRESSURE: ____________________

FLOWING: ____________________

DATE OF TEST: ____________________

TIME OF DAY: ____________________

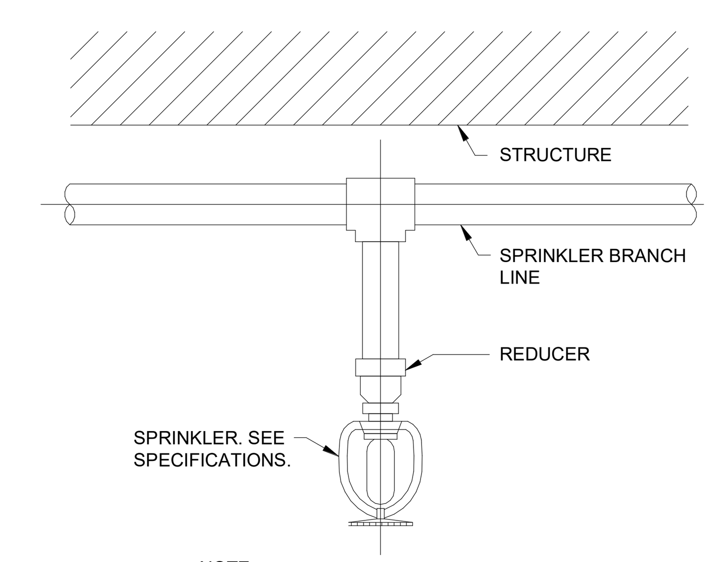

NOTE:
DEFLECTOR DISTANCE TO STRUCTURE MUST BE IN ACCORDANCE WITH NFPA 13 FOR TYPE OF BUILDING CONSTRUCTION INVOLVED.

1 FP0.01 PENDANT SPRINKLER HEAD
NO SCALE

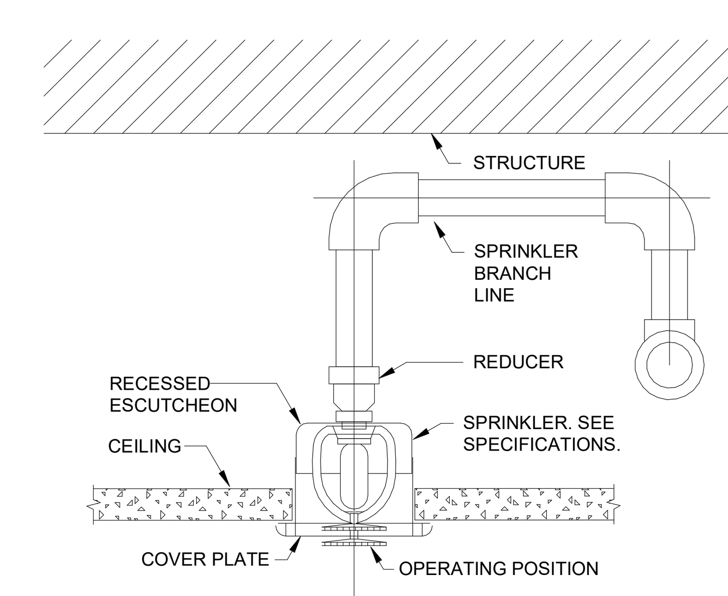

3 FP0.01 CONCEALED SPRINKLER HEAD
NO SCALE

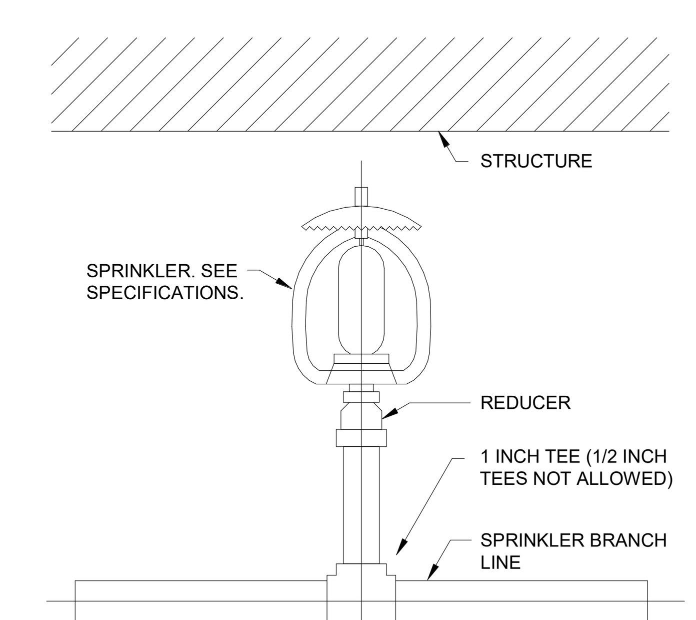

2 FP0.01 UPRIGHT SPRINKLER HEAD
NO SCALE

AHO ARCHITECTS, LLC
www.ahoarch.com

STATE OF TEXAS
JAMES HOGLAND, JR.
93348
8/12/26

Express Oil Change & Tire Engineers
Single Building / Right Hand Oil Change / Rear Enter / Side Tire Storage
Cross Roads, Texas (Aubrey)

FINAL

No.	Description	Date
IFP-0	Issued for Permit	06/30/26
IFB-0	Iss. fo Bid/AHJ Rev.	08/12/2026

© 2026 Aho Architects, LLC. All Rights Reserved.

Fire Protection Legend, Abbreviations and Schedules

Project number	26013
Date	06/30/2026
Drawn by	CA
Checked by	JB

FP0.01

Scale

9/1/2026 1:09:22 PM

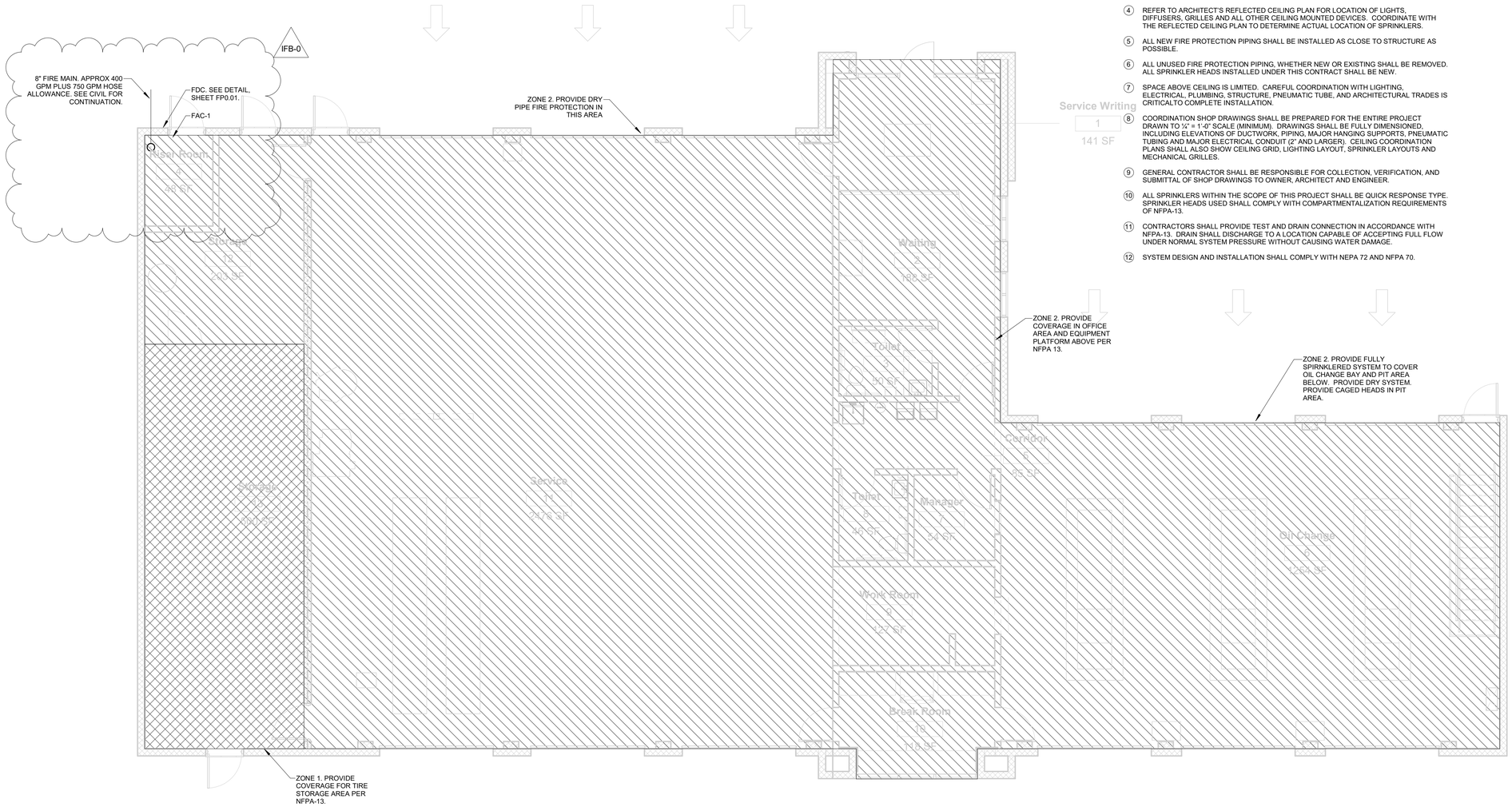

NORTH

FIRE PROTECTION FLOOR PLAN
3/16" = 1'-0"

GENERAL NOTES:

1. FIRE PROTECTION LAYOUTS SHOWN ON PLANS ARE FOR INFORMATIONAL PURPOSES ONLY. IT IS THE INTENT OF THESE DRAWINGS TO INDICATE AREAS OF COVERAGE, TYPES OF SPRINKLER HEADS AND FINISHES TO BE USED, TYPES OF FIRE PROTECTION SYSTEM TO BE INSTALLED, AND LOCATIONS OF MAJOR EQUIPMENT AND COMPONENTS. THE FIRE PROTECTION CONTRACTOR SHALL DESIGN A FULL AND COMPLETE FIRE PROTECTION SYSTEM BASED ON HYDRAULIC INFORMATION, LAYOUT OF PIPING SYSTEM AS COORDINATED WITH OTHER TRADES,AND SPECIFIC COMPONENTS USED IN FIRE PROTECTION SYSTEM. ALL DESIGNS SHALL BE IN ACCORDANCE WITH NFPA 13.
2. PIPING LAYOUT SHOWN IS DIAGRAMMATIC AND NOT INTENDED TO SHOW ALL OFFSETS AND CHANGES IN ELEVATION NECESSARY FOR COMPLETE INSTALLATION. IT IS THE CONTRACTOR'S RESPONSIBILITY TO FIELD VERIFY EXISTING CONDITIONS AND DIMENSIONS PRIOR TO SUBMITTING BID.
3. CONTRACTOR SHALL PROVIDE NECESSARY OFFSETS IN NEW AND EXISTING PIPING AND ELECTRICAL CONDUIT AS REQUIRED TO ACCOMMODATE NEW WORK. CONTRACTOR SHALL ALLOW FOR ANY CONFLICTS ENCOUNTERED.
4. REFER TO ARCHITECT'S REFLECTED CEILING PLAN FOR LOCATION OF LIGHTS, DIFFUSERS, GRILLES AND ALL OTHER CEILING MOUNTED DEVICES. COORDINATE WITH THE REFLECTED CEILING PLAN TO DETERMINE ACTUAL LOCATION OF SPRINKLERS.
5. ALL NEW FIRE PROTECTION PIPING SHALL BE INSTALLED AS CLOSE TO STRUCTURE AS POSSIBLE.
6. ALL UNUSED FIRE PROTECTION PIPING, WHETHER NEW OR EXISTING SHALL BE REMOVED. ALL SPRINKLER HEADS INSTALLED UNDER THIS CONTRACT SHALL BE NEW.
7. SPACE ABOVE CEILING IS LIMITED. CAREFUL COORDINATION WITH LIGHTING, ELECTRICAL, PLUMBING, STRUCTURE, PNEUMATIC TUBE, AND ARCHITECTURAL TRADES IS CRITICALTO COMPLETE INSTALLATION.
8. COORDINATION SHOP DRAWINGS SHALL BE PREPARED FOR THE ENTIRE PROJECT DRAWN TO ¼" = 1'-0" SCALE (MINIMUM). DRAWINGS SHALL BE FULLY DIMENSIONED, INCLUDING ELEVATIONS OF DUCTWORK, PIPING, MAJOR HANGING SUPPORTS, PNEUMATIC TUBING AND MAJOR ELECTRICAL CONDUIT (2" AND LARGER). CEILING COORDINATION PLANS SHALL ALSO SHOW CEILING GRID, LIGHTING LAYOUT, SPRINKLER LAYOUTS AND MECHANICAL GRILLES.
9. GENERAL CONTRACTOR SHALL BE RESPONSIBLE FOR COLLECTION, VERIFICATION, AND SUBMITTAL OF SHOP DRAWINGS TO OWNER, ARCHITECT AND ENGINEER.
10. ALL SPRINKLERS WITHIN THE SCOPE OF THIS PROJECT SHALL BE QUICK RESPONSE TYPE. SPRINKLER HEADS USED SHALL COMPLY WITH COMPARTMENTALIZATION REQUIREMENTS OF NFPA-13.
11. CONTRACTORS SHALL PROVIDE TEST AND DRAIN CONNECTION IN ACCORDANCE WITH NFPA-13. DRAIN SHALL DISCHARGE TO A LOCATION CAPABLE OF ACCEPTING FULL FLOW UNDER NORMAL SYSTEM PRESSURE WITHOUT CAUSING WATER DAMAGE.
12. SYSTEM DESIGN AND INSTALLATION SHALL COMPLY WITH NEPA 72 AND NFPA 70.

Pinnacle ENGINEERING, INC.
Engineering & Design Consultants
2031 Shady Crest Dr
Birmingham, AL 35216
(205) 733-6912 FAX: (205) 733-6913
Job No.26152

AHO ARCHITECTS, LLC
www.ahoarch.com

STATE OF ALABAMA
BRIAN AHO
93346
8/12/26

Express Oil Change & Tire Engineers

Single Building / Right Hand Oil Change / Rear Enter / Side Tire Storage

Cross Roads, Texas (Aubrey)

FINAL

No.	Description	Date
IFP-0	Issued for Permit	06/30/26
IFB-0	Iss. fo Bid/AHJ Rev.	08/12/2026

© 2026 Aho Architects, LLC. All Rights Reserved.

Fire Protection Floor Plan

Project number	26013
Date	06/30/2026
Drawn by	CA
Checked by	JB

FP1.01

Scale As indicated

9/1/2026 1:09:22 PM

LEGEND

Symbol	Description
12x20	DUCT SIZE, FIRST FIGURE IS SIDE SHOWN INSIDE CLEAR DIMENSION UNLESS NOTED OTHERWISE
24x12	LOW PRESSURE, RECTANGULAR (GALVANIZED STEEL)
24x12	LOW PRESSURE, RECTANGULAR (ALUMINUM STEEL)
20"ø	ROUND (GALVANIZED STEEL)
20x10	MEDIUM PRESSURE, FLAT OVAL (GALVANIZED STEEL)
	FLEXIBLE DUCT
R	DUCT RISE
D	DUCT DROP
	EXISTING DUCTWORK TO REMAIN
	DUCT TRANSITION
	RECTANGULAR TO ROUND DUCT TRANSITION
	TURNING VANES
FD	FIRE DAMPER AND SLEEVE, PROVIDE ACCESS DOOR
SD	SMOKE DAMPER AND SLEEVE, PROVIDE ACCESS DOOR
SD/FD	COMBINATION FIRE/SMOKE DAMPER, PROVIDE ACCESS DOOR
	MANUAL VOLUME DAMPER
	STANDARD 45° BRANCH, SUPPLY OR RETURN, NO SPLITTER
	STANDARD 45° BRANCH, SUPPLY OR RETURN, NO SPLITTER, WITH MANUAL VOLUME DAMPER
	CONICAL SPIN-IN FITTING WITH BUTTERFLY DAMPER
	GRILLE OR REGISTER, CEILING
A	ACCESS DOOR
D	CONDENSATE DRAIN PIPING
AD	AUXILIARY CONDENSATE DRAIN PIPING
R	REFRIGERANT PIPING (2 LINES TOTAL)
	ELBOW, 90° (LONG RADIUS)
	TEE
	TEE, TURNED UP
	TEE TURNED DOWN
	ELBOW, TURNED DOWN
	ELBOW, TURNED UP
T	WALL MOUNTED THERMOSTAT
H	WALL MOUNTED HUMIDISTAT
S	WALL MOUNTED TEMPERATURE SENSOR
C	WALL MOUNTED CARBON DIOXIDE SENSOR
# G	WALL MOUNTED DEVICE W/ COVER GAURD
	SMOKE DETECTOR
	TIE NEW INTO EXISTING
UC	UNDERCUT DOOR 3/4 INCHES
	SUPPLY AIR FLOW
	RETURN OR EXHAUST AIR FLOW

NOTE: THIS LEGEND IS FOR REFERENCE ONLY. ALL SYMBOLS WHICH APPEAR WITHIN THE LEGEND MAY NOT APPLY TO THIS PROJECT.

ABBREVIATIONS

AB.CL'G	ABOVE CEILING
ABV.	ABOVE
AC	ALTERNATING CURRENT
A/C	AIR COMPRESSOR
AFF	ABOVE FINISHED FLOOR
AHU	AIR HANDLING UNIT
AI	ANALOG INPUT
ALT.	ALTERNATE
AMP	AMPERE
AO	ANALOG OUTPUT
APPROX.	APPROXIMATELY
ARCH.	ARCHITECTURAL
AVG	AVERAGE
B	BOILER
BTU	BRITISH THERMAL UNIT
CFM	CUBIC FEET PER MINUTE
CH	CHILLER
CHWP	CHILLED WATER PUMP
CLG	CEILING
CT	COOLING TOWER
CU	CONDENSING UNIT
CWP	CONDENSER WATER PUMP
DEFL	DEFLECTION
DET	DETAIL
DI	DIGITAL INPUT
DIA	DIAMETER
∅	DIAMETER
DO	DIGITAL OUTPUT
EDB	ENTERING DRY BULB
ELEC.	ELECTRICAL
ELEV.	ELEVATION
EWB	ENTERING WET BULB
EWT	ENTERING WATER TEMPERATURE
EXH	EXHAUST
EXIST.	EXISTING
°F	DEGREES FAHRENHEIT
GFF	GAS FIRED FURNACE
GPM	GALLONS PER MINUTE
FPM	FEET PER MINUTE
FPS	FEET PER SECOND
FT	FOOT OR FEET
HD.	HEAD
HP	HORSE POWER
HR	HOUR(S)
HT.	HEIGHT
HTR	HEATER
HVAC	HEATING, VENTILATION AND AIR CONDITIONING
HWP	HOT WATER PUMP
HX	HEAT EXCHANGER
HZ	FREQUENCY (HERTZ)
ID	INSIDE DIAMETER
IN.	INCHES
KW	KILOWATT
KWH	KILOWATT HOUR
MAX	MAXIMUM
MBH.	1000 BTU PER HOUR
MECH.	MECHANICAL
MFR.	MANUFACTURER
MIN	MINIMUM
NO.	NUMBER
N/A	NOT APPLICABLE
NC	NOISE CRITERIA
O.D.	OUTSIDE DIAMETER
OA	OUTSIDE AIR
⦵	OVAL DUCTWORK
ORIG.	ORIGINAL
PH.	PHASE
PIU	POWERED INDUCTION UNIT
PRESS	PRESSURE
RTN	RETURN AIR
RTU	ROOFTOP AIR HANDLING UNIT
SDC	STAND ALONE DIGITAL CONTROLLER
SENS.	SENSIBLE
SQ.	SQUARE
SPLY	SUPPLY
TEMP	TEMPERATURE
VAV	VARIABLE AIR VOLUME
W	WATT
W/	WITH
W.P.D.	WATER PRESSURE DROP

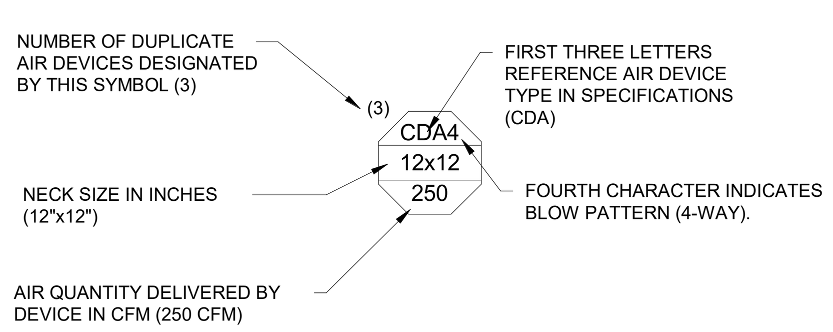

1 / M0.01 AIR DEVICE LEGEND
NO SCALE

AIR HANDLING UNIT SCHEDULE

EQUIPMENT NO.	MANUFACTURER/ MODEL NO.	CFM	OA CFM	E.S.P. (IN. W.C.)	FAN H.P.	FAN DRIVE	COOLING CAPACITY EDB (F°)	EWB (F°)	LDB (F°)	LWB (F°)	ELECTRIC HEAT TOTAL (KW) (208V)	TOTAL (KW) (240V)	STAGES	ELECTRICAL DISCONNECT	VOLTS/PH./HZ. 208/1/60 UNIT MCA	208/1/60 UNIT MOCP	VOLTS/PH./HZ. 240/1/60 UNIT MCA	240/1/60 UNIT MOCP	MOUNTING	WEIGHT (LBS.)	REMARKS
AHU-1	TRANE 5TEM6D04AV31	1,195	150	--	1/2	--	80	67	58.60	57.70	10.8	14.4	2	BY DIV. 26	73.0	80.0	83.0	90.0	HORIZONTAL	150	1), 2), 3)

REMARKS:
1) PROVIDE UNIT WITH SINGLE POINT POWER CONNECTION.
2) PROVIDE WITH 1" THROW AWAY FILTERS.
3) ROUTE CONDENSATE TO HUB DRAIN ON MEZZANINE.

OUTDOOR HEAT PUMP SCHEDULE

EQUIPMENT NO.	MANUFACTURER/ MODEL NO.	SERVICE	COOLING CAPACITY NOMINAL (TONS)	AMBIENT TEMP. (F)	HEATING CAPACITY MBH	AMBIENT TEMP. (F)	ELECTRICAL UNIT MCA	UNIT MOCP	DISCONNECT	VOLTS/PH./HZ.	MIN. SEER2	MIN. COP @47	WEIGHT (LBS.)	REMARKS
OHP-1	TRANE 5TWR5036A1	AHU-1	3.0	95.0	31.8	47.0	19.0	30.0	BY DIV. 26	208/1/60	16.0	4.2	225	1), 2), 3)

REMARKS:
1) PROVIDE LONG LINE ACCESSORIES AS REQUIRED BY MANUFACTURER.
2) UNITS SHALL BE SIZED AT 95°F AMBIENT TEMPERATURE.
3) LOCATE UNIT ON HOUSEKEEPING PAD. ANCHOR UNIT TO CURB WITH EXPANSION BOLTS.

POWER VENTILATOR SCHEDULE

EQUIPMENT NO.	MANUFACTURER/ MODEL NO.	CFM	E.S.P. (IN. W.C.)	RPM	MAX. SONES	ELECTRICAL DISCONNECT	MOTOR STARTER	WATTS	MOTOR VOLTS/PH./HZ.	LOCATION	TYPE	DRIVE	WGT (LBS.)	REMARKS
EF-1	COOK GC-146	70	0.35	849	1.5	BY DIV. 26	BY DIV. 23	32	115/1/60	CEILING	CENTRIFUGAL	DIRECT	15	1), 3), 5)
EF-2	COOK GC-146	70	0.35	849	1.5	BY DIV. 26	BY DIV. 23	32	115/1/60	CEILING	CENTRIFUGAL	DIRECT	15	1), 3), 5)
EF-3	COOK 150SQN17D	3000	0.35	1649	21.4	BY DIV. 26	BY DIV. 23	1 HP	115/1/60	INLINE	CENTRIFUGAL	DIRECT	120	2), 3), 6)
EF-4	COOK 195C7B	4200	0.35	1004	16.0	BY DIV. 26	BY DIV. 23	1 HP	115/1/60	ROOF	CENTRIFUGAL	BELT	125	2), 4)

REMARKS:
1) PROVIDE OCCUPANCY SENSOR FOR FAN OPERATION IN EACH RESTROOM.
2) FAN SHALL RUN CONTINUOUSLY DURING OCCUPIED HOURS. INTERLOCK WITH LOCAL SWITCH. COORDINATE WITH ELECTRICAL.
3) PROVIDE WITH FAN SPEED CONTROLLER.
4) PROVIDE WITH FAN INLET GUARDS AND BELT TENSIONER.
5) PROVIDE WITH BACKDRAFT DAMPER.
6) PROVIDE FAN WITH EC VARIFLOW DRIVE PACKAGE.

IFB-0

GAS RADIANT HEATER SCHEDULE

EQUIPMENT NO.	MANUFACTURER/ MODEL NO.	HEATING CAPACITY (MBH)	AMPS	ELECTRICAL DISCONNECT	VOLTS/PH./HZ.	WEIGHT (LBS)	MOUNTING HEIGHT	REMARKS
RH-1	RE-VERBER-RAY DX3L-30-100	100	0.1	BY DIV. 26	115/1/60	160	13 6"	1), 2), 4), 5)
RH-2	RE-VERBER-RAY DR-50	50	0.1	BY DIV. 26	115/1/60	50	11' 9"	1), 2), 3), 4)
RH-3	RE-VERBER-RAY DR-50	50	0.1	BY DIV. 26	115/1/60	50	11' 9"	1), 2), 3), 4)

REMARKS:
1) MAINTAIN DISTANCES FROM COMBUSTIBLES PER MANUFACTURERS INSTALLATION DETAILS.
2) PROVIDE WITH 24V TRANSFORMER AND LOW VOLTAGE THERMOSTAT.
3) ANGLE UNITS AT 30 DEGREES FROM HORIZONTAL. SUSPEND UNITS FROM STRUCTURE PER DETAIL.
4) HEIGHT SHOWN MEASURED FROM BOTTOM OF HEATING RAY HEAD/TUBE.
5) PROVIDE HEATER WITH SIDE SHIELDS TO DIRECT HEAT DOWNWARD.

ELECTRIC UNIT HEATER SCHEDULE

EQUIPMENT NO.	MANUFACTURER/ MODEL NO.	KW	STAGES	EAT (°F)	CFM	ELECTRICAL DISCONNECT	VOLTS/PH./HZ.	MOUNTING	WGT (LBS)	REMARKS
EUH-1	MARKEL 3450	3	1	60	245	INTEGRAL	208/1/60	WALL	45	1)

REMARKS:
1) PROVIDE WITH UNIT MOUNTED THERMOSTAT, CONTROL TRANSFORMER, AND DISCONNECT SWITCH.

OUTSIDE AIR CALCULATIONS

MECHANICAL CODE OUTSIDE AIR REQUIREMENT

Served By	Space Name	Supply Air (cfm) Vpz (Max)	Area (sq. ft) Az	Occupancy Classification	Max Number of Occupants/SF (per 1000 SF)	Number of Occupants Rp	O.A. Area Air Rate (cfm / sq. ft) Ra	O.A. People Air Rate (cfm/person) Pz	O.A. Area Air Rate (cfm)	O.A. People Air Rate (cfm)	O.A. (cfm) Vbz	Zone Effectiveness Ez	Corrected CFM Voz	MAX OA REQUIRED Vot	Primary O.A. Fraction Zp	Ventilation Effectiveness Ev	Remarks
AHU-1	1 Service Writing	320	141	Lobbies	--	1	0.06	5	8	5	13	0.80	17	17	0.05	1	
	2 Waiting	275	188	Lobbies	--	15	0.06	5	11	75	86	0.80	108	108	0.39	0.758	
	7 Manager	100	54	Office	5	1	0.06	5	3	5	8	0.80	10	10	0.10	1	
	10 Break Room	400	118	Break Room	35	1	0.06	10	7	10	17	1.80	9	9	0.02	1	
															OA	Lowest Ev	
															144.46	1.00	

Pinnacle ENGINEERING, INC
Engineering & Design Consultants
2031 Shady Crest Dr
Birmingham, AL 35216
(205) 733-6912 FAX: (205) 733-6913
Job No.26152

AHO ARCHITECTS, LLC
www.ahoarch.com

STATE OF TEXAS
JAMES HOGLAND, JR.
93348
PROFESSIONAL ENGINEER
8/12/26

Express Oil Change & Tire Engineers
Single Building / Right Hand Oil Change / Rear Enter / Side Tire Storage
Cross Roads, Texas (Aubrey)

FINAL

No.	Description	Date
IFP-0	Issued for Permit	06/30/26
IFB-0	Iss. fo Bid/AHJ Rev.	08/12/2026

© 2026 Aho Architects, LLC. All Rights Reserved.

Mechanical Legend, Abbreviations and Schedules

Project number	26013
Date	06/30/2026
Drawn by	CA
Checked by	JB

M0.01

Scale 12" = 1'-0"

9/1/2026 1:09:23 PM

SECTION 15010 - MECHANICAL GENERAL

A. PROVIDE EQUIPMENT, LABOR, MATERIAL, ETC., REQUIRED TO MAKE A COMPLETE WORKING INSTALLATION.

B. INSTALL THE WORK IN ACCORDANCE WITH DRAWINGS, SPECIFICATIONS AND THE STANDARDS AND CODES (LATEST EDITION) THAT APPLY TO THIS WORK. IN THE EVENT OF A CONFLICT, INSTALL WORK IN ACCORDANCE WITH THE MOST STRINGENT CODE REQUIREMENTS DETERMINED BY THE ENGINEER.

C. OBTAIN AND PAY FOR ALL PERMITS AND INSPECTIONS INCLUDING: BUILDING PERMITS, HEALTH DEPARTMENT PERMITS AND SEWER TAP PERMITS. DELIVER TO ENGINEER CERTIFICATES OF INSPECTION AND APPROVAL ISSUED BY AUTHORITIES.

D. ALL EQUIPMENT AND METHOD SHALL BE INSTALLED AND CONNECTED IN ACCORDANCE WITH THE BEST ENGINEERING PRACTICES AND IN ACCORDANCE WITH THE MANUFACTURER'S RECOMMENDATIONS.

E. DISCONNECT, REMOVE AND RE-INSTALL MECHANICAL SERVICES LOCATED ON OR CROSSING THROUGH CONTRACT LIMITS, ABOVE OR BELOW GRADE, OBSTRUCTING CONSTRUCTION OF PROJECT OR CONFLICTING WITH COMPLETED PROJECT OR ANY APPLICABLE CODES.

F. DRAWINGS AND SPECIFICATIONS ARE COMPLEMENTARY. WORK CALLED FOR BY ONE IS BINDING AS IF CALLED FOR BY BOTH.

G. DRAWINGS ARE DRAWN TO A SMALL SCALE AND ARE DIAGRAMMATIC ONLY. THE DRAWINGS INDICATE SIZE AND GENERAL ARRANGEMENT OF EQUIPMENT. DO NOT SCALE DRAWINGS FOR EXACT LOCATIONS. FIELD MEASUREMENTS TAKE PRECEDENCE.

H. PROVIDE NECESSARY OFFSETS, ELBOWS AND FITTINGS AS REQUIRED TO AVOID CONFLICT WITH EQUIPMENT OF OTHER DIVISIONS AND TO OBTAIN PROPER HEADROOM AND CLEAR PASSAGEWAYS. THIS SHALL BE DONE AT NO ADDITIONAL COST TO THE OWNER.

I. WORK UNDER THIS DIVISION SHALL BE FIRST CLASS WITH EMPHASIS ON NEATNESS AND WORKMANSHIP. INSTALL WORK USING COMPETENT MECHANICS, UNDER SUPERVISION OF FOREMAN, ALL DULY CERTIFIED BY LOCAL AUTHORITIES.

J. INSTALLATION SUBJECT TO ENGINEER'SOBSERVATION, FINAL APPROVAL, AND ACCEPTANCE. ENGINEER MAY REJECT UNSUITABLE WORK.

K. ALL MATERIALS SHALL BE NEW. ALL MATERIALS AND EQUIPMENT FOR WHICH A UL STANDARD, AN AGA APPROVAL, AN AWWA STANDARD, FM LISTING OR ASME REQUIREMENTS IS ESTABLISHED, SHALL BE SO APPROVED AND LABELED OR STAMPED.

L. THE DRAWINGS ARE BASED ON THE USE OF PRODUCTS SPECIFIED AND LISTED FIRST. IF ANY REVISION IN PIPING, CONDUIT WORK, FOUNDATIONS, ANCHOR BOLTS, CONNECTIONS, ETC., IS REQUIRED BY OTHER NAMED PRODUCTS OR APPROVED SUBSTITUTIONS, IT SHALL BE THE CONTRACTOR'S RESPONSIBILITY TO MAKE SUCH REVISIONS AT NO ADDITIONAL EXPENSE TO THE OWNER.

M. SUBMIT SIX (6) ORIGINAL COPIES OF COMPLETE SHOP DRAWINGS FOR ALL MATERIALS AND EQUIPMENT FURNISHED UNDER DIVISION 15 OF SPECIFICATIONS TO ENGINEER FOR REVIEW. SHOP DRAWINGS SHALL BEAR THE STAMP OF APPROVAL OF THE CONTRACTOR AS EVIDENCE THAT THE DRAWINGS HAVE BEEN CHECKED BY HIM. DRAWING SUBMITTED WITHOUT THIS STAMP OF APPROVAL WILL NOT BE CONSIDERED AND WILL BE RETURNED FOR PROPER RESUBMISSION.

N. REVIEW OF SHOP DRAWINGS DOES NOT RELIEVE CONTRACTOR OF RESPONSIBILITY FOR ERRORS AND OMISSIONS IN SHOP DRAWINGS. CONTRACTOR IS RESPONSIBLE FOR DIMENSIONS AND SIZES OF EQUIPMENT. INFORM ENGINEER IN WRITING OF EQUIPMENT DIFFERING FROM THAT SHOWN.

O. PROVIDE MAINTENANCE AND OPERATING MANUALS BOUND IN 8-1/2" X 11" HARDBACK, THREE-POST BINDERS. MANUALS SHALL CONTAIN WRITTEN INSTRUCTIONS FOR EACH SYSTEM, SHOP DRAWINGS, SCHEMATIC DRAWINGS, EQUIPMENT CATALOG CUTS, MANUFACTURER'S INSTRUCTIONS, MANUFACTURERS WARRANTIES, AND VALVE TAG LIST.

P. PROVIDE AS-BUILT PRINTS AT THE COMPLETION OF JOB. KEEP ONE SET OF PRINTS ON JOB AND RECORD DAY TO DAY CHANGES TO CONTRACT DRAWINGS WITH RED PENCIL. INDICATE ACTUAL LOCATION OF PIPING, DUCTWORK, VALVES, DAMPERS, AND EQUIPMENT. TURN OVER PRINTS TO ENGINEER AT FINAL OBSERVATION.

Q. FURNISH ENGINEER WRITTEN WARRANTY, STATING THAT IF WORKMANSHIP AND/OR MATERIALS EXECUTED UNDER THIS DIVISION IS PROVEN DEFECTIVE WITHIN ONE (1) YEAR AFTER FINAL ACCEPTANCE, SUCH DEFECTS AND OTHER WORK DAMAGED WILL BE REPAIRED AND/OR REPLACED.

SECTION 15050 - BASIC MATERIALS AND METHODS

A. CONCRETE HOUSEKEEPING PADS:
1. PROVIDE CONCRETE HOUSEKEEPING PADS UNDER ALL FLOOR MOUNTED EQUIPMENT, PIPE SUPPORT AND DUCT SUPPORTS AND WHERE INDICATED. CONCRETE SHALL BE 3000 PSI AT 28 DAYS MINIMUM.
2. PADS SHALL BE DOWELED TO FLOOR WITH NOT LESS THAN 4 NO. 4 BARS GROUTED IN PLACE. ANCHOR BOLTS FOR EQUIPMENT SHALL BE POURED INTEGRAL WITH THE PAD. PADS SHALL BE REINFORCED WITH AT LEAST ONE NO. 4 BAR (STIRRUPS). PADS SHALL HAVE CHAMFERED EDGES AND A BROOM FINISH.
3. HOUSEKEEPING PADS SHALL BE NOT LESS THAN 3-1/2 IN. THICK, SIZED AT LEAST 8 IN. LARGER THAN THE EQUIPMENT.

B. ACCESS PANELS:
1. ACCESS PANELS SHALL HAVE WELDED STEEL FRAME, ONE PIECE DOORS, AND SELF LATCHING DOOR LOCKS. LOCKS SHALL BE SCREW DRIVER OPERATED WITH CASE HARDENED STEEL CAM. PANELS SHALL BE MILCOR, CESCO, KARP OR EQUAL.
2. PROVIDE ACCESS PANELS IN WALLS AND CEILINGS AS NEEDED TO ALLOW ACCESS TO VALVES, EQUIPMENT, SHOCK ABSORBERS, TRAP PRIMERS, ETC. AND WHERE NOTED.

C. FIRESTOPPING AND SOUNDSTOPPING:
1. PENETRATIONS THROUGH FLOORS AND FIRE RESISTANT WALLS SHALL BE SEALED TO THE RATED FIRE RESISTANCE EQUAL TO THE WALL. INSTALLATION SHALL BE DONE BY A QUALIFIED INSTALLER, APPROVED BY THE MANUFACTURER.
2. IN AN EXISTING BUILDING ALL PENETRATIONS THROUGH FLOORS AND FIRE RESISTANT WALLS SHALL BE SEALED AT THE END OF EACH WORKING DAY. THESE CLOSURES SHALL HAVE AN EQUAL FIRE RESISTANCE RATING TO THE FLOOR OR WALL.
3. PROVIDE SOUND PROOFING THROUGH NON-RATED WALLS.

D. PIPING SEALS:
1. PROVIDE MODULAR, RESILIENT SEALS AROUND PIPES PENETRATING ALL EXTERIOR WALLS, AND FLOORS BELOW GRADE. PIPING SEALS SHALL BE THUNDERLINE CORP. "LINK SEAL" LS SERIES.

E. CUTTING AND PATCHING:
1. CONTRACTOR SHALL BE RESPONSIBLE FOR CUTTING AND PATCHING. CUT WALLS, FLOORS, CEILINGS, PARTITIONS, ETC., REQUIRED FOR THE INSTALLATION OF THIS WORK IN A NEAT AND CAREFUL MANNER. CORE DRILL FOR PIPE SLEEVES AND OTHER OPENINGS THROUGH FLOORS AND WALLS. SAWCUT LARGER OPENINGS. CUTTING SHALL BE KEPT TO A MINIMUM.
2. REPLACE OR REPAIR DUCTWORK, CONDUIT, PIPING, ETC., THAT IS CUT. PATCH AROUND OPENING CUT BY THIS CONTRACTOR OR PROVIDED BY OTHERS FOR HIM. PATCHING SHALL BE DONE BY AN APPROVED QUALIFIED CONTRACTOR, BUT SHALL BE PAID FOR BY THIS CONTRACTOR. FINISHED PATCHING SHALL RETAIN FIRE AND SMOKE RATINGS OF THE ASSEMBLY AND SHALL MATCH SURROUNDING FINISH.

F. ANCHORS:
1. MOUNT ALL EQUIPMENT, BRACKETS, HANGERS, ANCHORS, ETC. TO SAFELY RESIST THE VIBRATION OR THRUST FORCES AND SUPPORT THE UNIT'S WEIGHT.
2. FLOOR MOUNTED ROTATING OR VIBRATING EQUIPMENT SHALL BE ANCHORED TO THE FLOOR USING GROUTED-IN-PLACE OR CAST-IN-PLACE ANCHOR BOLTS WITH THREE INCH HOOK AND SLEEVE. ANCHOR BOLTS SHALL BE OF THE SIZE RECOMMENDED BY THE MANUFACTURER.
3. FLOOR MOUNTED STATIC ITEMS, WALL AND CEILING MOUNTED EQUIPMENT BRACKET AND HANGERS SHALL BE INSTALLED USING DRILLED ANCHORS. ANCHORS SHALL BE PHILLIPS DRILL COMPANY "RED HEAD" OR MULTI-SET II. SIZE ANCHORS FOR FOUR TIMES THE APPLIED LOAD. BOLTS USED OUTDOORS OR IN A WET ENVIRONMENT SHALL BE HOT DIP GALVANIZED.

G. PIPE IDENTIFICATION:
1. IDENTIFICATION SHALL BE IN ACCORDANCE WITH ANSI-A13.1. PIPE MARKERS SHALL BE SETON'S WEATHER-CODE OR EQUAL.
2. PROVIDE PIPE MARKERS AND DIRECTIONAL ARROWS ON PIPES AT BOTH SIDES OF PARTITIONS AND FLOORS SLABS, AT BRANCH LINE TAKE-OFFS, AT VALVES, AT INTERMEDIATE INTERVALS NOT IN EXCESS OF 20 FT. AND AT CONNECTIONS TO EQUIPMENT.
3. TAPE COLOR BAND IDENTIFYING MARKERS AND ARROWS ON EACH PIPE, BOTH INSULATED AND BARE PIPES. PIPE MARKERS AND ARROWS SHALL BE LOCATED WHERE READILY VISIBLE AND ON LOWER QUADRANTS OF OVERHEAD PIPES.

H. VALVE TAG AND CHART:
1. VALVE TAGS SHALL BE SETON M4506, BLACK FILLED LETTERS WITH BRASS JACK CHAIN. ONE VALVE NUMBER SHALL BE STAMPED ON EACH TAG. IDENTIFY EACH VALVE TAG FOR THE UTILITY IT SERVES, SUCH AS "CW" FOR COLD WATER, HW FOR HOT WATER, ETC. VALVE CHARTS SHALL BE SETON. ATTACH A NUMBERED VALVE TAG TO EACH VALVE.
2. PROVIDE A TYPE WRITTEN CHART IN FRAME UNDER GLASS COVER, GIVING THE FULL LIST OF ALL VALVES INSTALLED UNDER THIS CONTRACT. CHART SHALL LIST VALVE NUMBER, TYPE OF UTILITY, AND LOCATION. MOUNT CHART WHERE DIRECTED BY OWNER. PROVIDE ONE ADDITIONAL COPY TO OWNER.

I. EQUIPMENT IDENTIFICATION:
1. IDENTIFY EACH PIECE OF EQUIPMENT WITH A 1/8 INCH THICK ENGRAVED MELAMINE PLASTIC LAMINATE NAMEPLATE. LETTERS SHALL BE 1/2 INCH HIGH STANDARD STYLE. NAMES, ABBREVIATIONS, AND NUMBERING SHALL AGREE WITH THE CORRESPONDING EQUIPMENT DESIGNATIONS SHOWN ON THE DRAWINGS. USE BLACK LETTERS CUT IN A WHITE BACKGROUND FOR ALL EQUIPMENT ON STANDARD ELECTRICAL POWER
2. FASTEN NAMEPLATES TO EQUIPMENT IN A CONSPICUOUS LOCATION USING SELF-TAPPING STAINLESS STEEL SCREWS, EXCEPT USE CONTACT EPOXY ADHESIVE WHERE SCREWS CANNOT OR SHOULD NOT PENETRATE SUBSTRATE.

J. PIPE SLEEVES:
1. PROVIDE PIPE SLEEVES WHERE PIPES PASS THROUGH FLOORS AND WALLS ABOVE OR BELOW CEILINGS. PROVIDE PIPE SLEEVES IN NEW WALLS AND FLOORS AS THE WORK PROGRESSES. PROVIDE SPLIT PIPE SLEEVES IN NEW WALLS BUILT UP AROUND EXISTING PIPES. TACK WELD SPLIT SLEEVES TOGETHER.
2. SIZE PIPE SLEEVES TO ALLOW CONTINUOUS INSULATION, BUT NOT LESS THAN TWO PIPE SIZES LARGER THAN PIPE. SLEEVES IN WALLS SHALL BE FLUSH WITH WALL, SLEEVES IN FLOORS SHALL EXTEND 3/4 INCHES ABOVE FLOOR AND BE FLUSH WITH STRUCTURE BELOW.
3. SLEEVES IN CONCRETE WALLS, FLOORS OR MASONRY SHALL BE SCH 40 STEEL PIPE, MACHINE CUT. SLEEVES IN GYPSUM BOARD OR PLASTER WALLS SHALL BE 14 GAUGE, ROLLED GALVANIZED SHEET METAL TACK WELDED ON THE LONGITUDINAL SEAM.
4. PROVIDE PLATES AROUND PIPES EXTENDING INTO EXPOSED AREAS WHERE THEY PASS THROUGH WALLS, FLOORS AND CEILINGS. SIZE PLATES TO COMPLETELY COVER PIPE SLEEVES. PLATES SHALL BE BEATON AND CADWELL, KEENEY OR GRINNELL, NICKEL PLATED STEEL, SPLIT PLATES WITH SET SCREW. CONCRETE FLOOR PLATE SHALL BE GRINNELL FIGURE 400.

K. FLASHING:
1. PROVIDE FLASHING AT PIPING AND DUCT PENETRATIONS THROUGH ROOF AND ROOF MOUNTED STRUCTURES FURNISHED UNDER THIS DIVISION. FLASH IN ACCORDANCE WITH ROOFING MANUFACTURERS DETAILS. FLASHING MATERIALS SHALL BE IN ACCORDANCE WITH THE ROOFING MANUFACTURERS SYSTEM.
2. PROVIDE FLASHING AT PIPES PASSING THROUGH FLOORS WITH WATERPROOF MEMBRANE. FLASHING SHALL BE IN ACCORDANCE WITH WATERPROOFING MANUFACTURER'S DETAILS.

SECTION 15260 - HVAC INSULATION

A. GENERAL:
1. ALL INSULATION, JACKETING, AND ADHESIVE SHALL HAVE COMPOSITE SURFACE BURNING CHARACTERISTIC RATING AS TESTED BY ASTM E 84, UL 723, OR NFPA 255 NOT EXCEEDING A FLAME SPREAD OF 25 OR SMOKE DEVELOPED OF 50.
2. SUBMITTALS SHALL USE PAGES FROM MIDWEST INSULATION CONTRACTORS ASSOCIATION - ACOMMERCIAL AND INDUSTRIAL INSULATION STANDARDS@ FOR DEFINING HOW INSULATION MATERIALS WILL BE APPLIED.
3. ALL PIPE OR DUCT INSULATION SHALL BE CONTINUOUS THROUGH WALLS, CEILING OR FLOOR OPENINGS, OR SLEEVES; EXCEPT WHERE FIRESTOP OR FIRESAFING MATERIALS ARE REQUIRED.
4. INSULATE ITEMS MOUNTED IN DUCTWORK WITH THE SAME THICKNESS OF INSULATION AS SPECIFIED FOR DUCTWORK: INCLUDING AIR MEASURING STATIONS, SMOKE DAMPERS, AND AUTOMATIC DAMPERS.
5. REPAIR INSULATION DAMAGED BY WORK UNDER THIS CONTRACT TO MATCH EXISTING WORK OR REPLACE DAMAGED PORTION WITH INSULATION SPECIFIED FOR NEW WORK.

B. ELASTOMERIC CLOSED CELL INSULATION:
1. INSULATION SHALL BE RUBATEX OR ARMSTRONG. SECURE INSULATION WITH CONTACT ADHESIVE IN ACCORDANCE WITH MANUFACTURERS INSTRUCTIONS. EXPOSED OR EXTERIOR INSTALLATIONS SHALL BE PAINTED WITH TWO COATS OF WATER BASE LATEX ENAMEL.
2. PROVIDE 1 IN. THICK INSULATION ON DX REFRIGERANT PIPING, COOLING COIL CONDENATE PIPING, CHILLED WATER RUN-OUTS TO TERMINAL DEVICES, COVERS AND CAPS FOR ALL VALVE STEMS AND OPERATORS, GAUGE COCKS, THERMOMETER WELLS AND OTHER APPURTENANCES SUBJECT TO SWEATING.

C. CONCEALED DUCTWORK:
1. DUCT WRAP SHALL BE 2 IN. THICK, 1.0 PCF WITH ALUMINUM OR FRK FACING, HAVING A MAXIMUM VAPOR TRANSMISSION OF .02 PERMS. MINIMUM INSTALLED "R" VALUE SHALL BE 5.6 WITH 25% COMPRESSION. INSULATION SHALL BE 250 DEG. F RATED AS MANUFACTURED BY OWENS CORNING, MANVILLE, KNAUF, OR CERTAINTEED.
2. APPLY JACKETED DUCTWRAP TO ALL CONCEALED DUCTWORK PROVIDING CONDITIONED AIR, OR OUTSIDE AIR. ONLY INSULATE RETURN DUCTWORK IN NON-CONDITIONED SPACES AND IN CEILING SPACES BELOW A ROOF. PULL INSULATION SNUG, BUT DO NOT COMPRESS INSULATION MORE THAN 1/4 INCH.
3. SECURE DUCTWRAP INSULATION TO DUCTWORK USING ADHESIVE. SECURE INSULATION ON BOTTOM ON SIDES OF HORIZONTAL DUCTWORK AND ALL SIDES OF VERTICAL DUCTWORK WITH INSULPINS WELDED TO DUCT ON 12 TO 18 INCH CENTERS AND WITH CLIPS SLIPPED OVER THE PINS. APPLY CLIPS WITHOUT COMPRESSING INSULATION. MAKE JOINTS BY LAPPING THE FACING A MINIMUM OF 2 INCH AND STAPLING WITH T-5 FLARED STAPLES. VAPOR - SEAL WITH CHILDERS CP-30 LOW ODOR AT ALL STAPLES, CLIP LOCATIONS AND OTHER PENETRATIONS. SEAL JOINTS WITH 3 INCH WIDE FSK TAPE.
4. FOR DUCTWORK INSIDE THERMAL ENVELOPE, INSULATION SHALL BE 2 IN. THICK. FOR DUCTWORK OUTSIDE THE THERMAL ENVELOPE, ALL DUCTWORK EXCEPT EXHAUST SHALL BE 4 IN. THICK (2 LAYERS).

D. EXPOSED DUCTWORK:
1. INSULATION BOARD SHALL BE 2 IN. THICK 3 PCF WITH FRK FACING. MINIMUM INSTALLED "R" VALUE 6. INSULATION SHALL BE 250 DEG. F RATED AS MANUFACTURED BY OWENS CORNING, MANVILLE, KNAUF, OR CERTAINTEED.
2. APPLY 2 IN. THICK INSULATION BOARD WITH FRK FACING TO ALL EXPOSED DUCTWORK PROVIDING CONDITIONED AIR, OR OUTSIDE AIR. INSULATE RETURN DUCTWORK IN NON-CONDITIONED SPACES.
3. SECURE INSULATION WITH INSULPINS (ALL SURFACES) WELDED TO DUCT ON 12 TO 18 IN. CENTERS AND WITH CLIPS SLIPPED OVER PINS. SEAMS AND JOINTS SHALL BE VAPOR SEALED WITH 3 IN. WIDE FSK TAPE. CORNERS AND EDGES OF DUCTWORK SHALL BE REINFORCED WITH ROLL-ON CORNER BEAD. SEAL ALL BREAK AND PUNCTURES WITH VAPOR BARRIER SEALANT AND FSK TAPE.

E. PIPING FINISHES:
1. METAL JACKETING SHALL BE, SMOOTH .016 IN. THICK, TYPE T 3003 ALUMINUM WITH LAMINATED MOISTURE BARRIER. JACKETING SHALL BE CHILDERS, ALUMINUM ROLL JACKETING WITH POLYKRAFT MOISTURE BARRIER. COVER THE FOLLOWING INSULATED SYSTEMS WITH METAL JACKETING: PIPING INSTALLED OUTDOORS. METAL FITTING COVERS SHALL BE TWO PIECE ALUMINUM. COVERS SHALL BE ELL-JAC.
2. CONCEALED PIPING FINISH COVERING SHALL BE THE ALL SERVICE JACKET. FITTINGS SHALL BE COVERED BY WRAPPING THE FITTING WITH FIBER REINFORCED TAPE, WITH A 5 PERCENT OVERLAP. FITTING COVERS SHALL BE ONE PIECE 20 MIL PVC. COVERS SHALL BE CEEL-TITE 550 PVC-UVR BY CEEL-CO OR EQUALS.

A. DUCTWORK FINISHES:
INSULATED DUCTWORK INSTALLED OUTDOORS, INSULATED DUCTWORK WITHIN 8 FT. OF THE FINISHED FLOOR IN A MECHANICAL ROOM SHALL BE COVERED WITH 30 GAUGE GALVANIZED STEEL. COVERING SHALL BE HEMMED, AND FLANGED. SECURE WITH SELF TAPPING SCREWS ON EIGHT INCH CENTERS. DO NOT PUNCTURE VAPOR BARRIER

SECTION 15535 - REFRIGERANT PIPING SYSTEMS

A. REFRIGERANT PIPING SHALL BE TYPE L, HARD DRAWN COPPER TUBING CONFORMING TO ASTM SPECIFICATION B-280, CLEANED AND CAPPED AND MARKED "ACR". FITTINGS FOR REFRIGERANT LINES SHALL BE AS WROUGHT COPPER OR FORGED BRASS CONFORMING TO ANSI/ASME STANDARD B16.22. JOINTS IN REFRIGERANT LINES SHALL BE BRAZED IN ACCORDANCE WITH ANSI B9.1. KEEP REFRIGERATION PIPING SEALED UNTIL IT IS USED. CAP OPEN ENDS OF INSTALLED PIPING UNTIL READY FOR FINAL CONNECTIONS.

B. THE REFRIGERATION SYSTEM PIPING AND ACCESSORIES SHALL BE INSTALLED IN ACCORDANCE WITH THE SAFETY CODE FOR MECHANICAL REFRIGERATION ANSI/ASHRAE 15-92 AND THE REFRIGERATION PIPING CODE ANSI/ASME B31.5. THE REFRIGERANT TUBE SIZES, AND INSTALLATION OF TUBING SHALL BE IN ACCORDANCE WITH THE EQUIPMENT MANUFACTURER'S RECOMMENDATIONS.

C. REFRIGERANT SUCTION LINE SIZE SHALL LIMIT THE TEMPERATURE RISE TO TWO DEGREES F AT FULL LOAD AND HOLD THE REFRIGERANT GAS VELOCITY TO NOT LESS THAN 500 FT. PER MIN. (FPM) IN THE HORIZONTAL NOR LESS THAN 1000 FPM IN THE VERTICAL AT MINIMUM LOAD. REFRIGERANT LIQUID LINE SIZE SHALL LIMIT THE PRESSURE DROP BETWEEN 4 AND 6 PSI AT FULL LOAD.

D. PITCH HOT GAS LINES AND SUCTION LINES APPROXIMATELY 1/8 INCH PER 10 FT. HOT GAS LINES AND SUCTION LINES EXCEEDING 30 FT. VERTICAL LIFT SHALL BE TRAPPED EVERY 20 FT. VERTICAL REFRIGERANT LINES SHALL BE RUN PLUMB, HORIZONTAL LINES SHALL RUN PARALLEL WITH BUILDING WALLS. REFRIGERANT LINES SHALL NOT CONTACT BUILDING STRUCTURE. ISOLATE PIPING WITH RESILIENT LINER IN PIPE SUPPORT OR ELASTOMERIC INSULATION.

E. TEST FOR LEAKS WITH AN ELECTRONIC LEAK DETECTOR. REPAIR LEAKS, REFILL, REPRESSURIZE, AND RETEST. FOLLOW STANDARD CHARGING AND DEHYDRATION PROCEDURES. CHARGE THROUGH THE SYSTEM FILTER-DRIER. CHANGE FILTER DRIERS AFTER 40 HOURS OF OPERATION.

F. PROVIDE A LINE SIZE FILTER-DRIER IN EACH LIQUID REFRIGERANT LINE BETWEEN THE CONDENSER AND THE EXPANSION VALVE. FILTER-DRIER SHALL BE A HENRY VALVE CO., SPORLAN OR ALCO.

G. SERVICE VALVES SHALL BE BACK SEATING TYPE, STEEL OR IRON BODY. PROVIDE SERVICE VALVES AT CONDENSING UNIT. SERVICE VALVES SHALL BE LINES SIZE. VALVES SHALL BE HENRY VALVE CO., COMPRESSOR VALVES, SPORLAN OR ALCO.

H. PROVIDE ISOLATION VALVES AROUND THE FILTER-DRIER TO PERMIT SERVICING THE DRIER WITHOUT LOSS OF REFRIGERANT. ISOLATION VALVES SHALL BE HENRY VALVE CO., 900 SERIES BALL VALVES. SPORLAN AND ALCO ARE APPROVED EQUAL.

I. CHARGING VALVE SHALL BE INSTALLED IN EACH LIQUID REFRIGERANT LINE BETWEEN THE CONDENSER AND THE FILTER DRIER. CHARGING VALVE SHALL BE A HENRY VALVE CO. TYPE 927 OR APPROVED EQUAL. SPORLAN AND ALCO ARE APPROVED EQUAL.

J. SIGHT GLASS SHALL BE INSTALLED IN EACH LIQUID REFRIGERANT LINE AT THE EVAPORATOR COIL. SIGHT GLASS SHALL BE HENRY VALVE CO. MI 31 SERIES DOUBLE PORT STYLE WITH EXTENDED ENDS FOR SOLDERING FOR LINES 5/8 INCH OD OR LARGER. USE MI 30 SERIES SINGLE PORT SOLDERING FOR LINES 5/8 INCH OD OR LARGER. USE MI 30 SERIES SINGLE PORT FOR LINES 1/2 INCH OD AND SMALLER. SPORLAN AND ALCO ARE APPROVED EQUAL.

K. PROVIDE BALANCED EXTERNALLY EQUALIZED THERMOSTATIC EXPANSION VALVE. DISTRIBUTORS SHALL BE MATCHED WITH THERMOSTATIC EXPANSION VALVES AND DIRECT EXPANSION COIL FOR PROPER PERFORMANCE. THERMOSTATIC EXPANSION VALVE (TXV) SHALL BE BALANCED EXTERNALLY EQUALIZED TYPE. DISTRIBUTIONS SHALL BE MATCHED WITH THERMOSTATIC EXPANSION VALVES AND DIRECT EXPANSION COIL FOR PROPER PERFORMANCE. DISTRIBUTORS SHALL BE ALCO OR APPROVED EQUAL. LOCATE BULB IN ACCORDANCE WITH MANUFACTURERS RECOMMENDATIONS. CONNECT THE EQUALIZING LINE TO THE TXV DOWN STREAM OF THE BULB. PROVIDE TRAPPED DOUBLE SUCTION RISERS ON SYSTEMS WITH UNLOADING CAPABILITY, WHEN REQUIRED FOR PROPER OIL RETURN.

L. PROVIDE FLEXIBLE CONNECTORS ON LIQUID LINE, AND SUCTION LINE AT THE CONDENSING UNIT. FLEXIBLE CONNECTORS SHALL BE BRAIDED BRONZE COVERING ON A BRONZE HOSE. END CONNECTORS SHALL BE FEMALE COPPER TUBE TYPE. UNITS SHALL BE RATED NOT LESS THAN 270 PSI AT 250 DEGREES F. UNITS SHALL BE SOUTHEASTERN HOSE, INC., SUPERIOR OR ANACONDA.

SECTION 15671 - AIR COOLED CONDENSING UNITS

A. UNITS SHALL BE ASSEMBLED ON MINIMUM 10 GAUGE STEEL MOUNTING/LIFTING RAILS AND SHALL BE WEATHER PROOFED. UNIT SHALL INCLUDE HERMETIC OR SEMI-HERMETIC RECIPROCATING COMPRESSOR(S), PLATE FIN CONDENSER COIL, FANS AND MOTORS, CONTROLS AND HOLDING CHARGE OF R-22. UNITS SHALL BE UL LISTED, AND RATED IN ACCORDANCE WITH ARI STANDARD 240 AND 270.

B. UNIT CASING SHALL BE CONSTRUCTED OF MINIMUM 18 GAUGE G-210, HEAVY GALVANIZED STEEL. EXTERIOR SURFACES SHALL BE FINISHED WITH A WEATHER-RESISTANT BAKED ENAMEL FINISH. COATING SYSTEM SHALL HAVE BEEN TESTED 500 HOURS IN SALT SPRAY TEST (ASTM B117). UNITS SHALL HAVE REMOVABLE PANELS THAT ALLOW ACCESS TO ALL MAJOR COMPONENTS AND CONTROLS.

C. SINGLE COMPRESSOR UNITS LESS THAN 7-1/2 TONS:
1. COMPRESSOR SHALL BE HERMETICALLY SEALED AND MOUNTED ON RUBBER VIBRATION ISOLATORS. COMPRESSOR SHALL INCLUDE INTERNAL OVER TEMPERATURE AND PRESSURE PROTECTION, THERMOSTATICALLY CONTROLLED SUMP HEATER, AND INTERNAL SPRING MOUNTS. REFRIGERATION CIRCUIT SHALL INCLUDE FACTORY INSTALLED LIQUID LINE DRIER, LOW PRESSURE SWITCH. LIQUID LINE AND SUCTION LINE SERVICE VALVE WITH GAUGE PORT.

D. CONDENSER SHALL BE INTERNALLY FINNED OR SMOOTH BORE 3/8 INCH COPPER TUBES MECHANICALLY BONDED TO CONFIGURED ALUMINUM PLATE FIN AS STANDARD. COIL SHALL BE FACTORY PRESSURE AND LEAK TESTED TO 375 PSIG AIR PRESSURE. PROVIDE CONDENSER COIL GUARD CONSISTING OF METAL GRILLE WITH PVC COATING.

E. CONDENSER FAN AND MOTOR(S) SHALL HAVE DIRECT-DRIVE, STATICALLY AND DYNAMICALLY BALANCED FAN(S) WITH ALUMINUM BLADES AND ELECTRO-COATED STEEL HUBS. FANS SHALL BE MOUNTED IN DRAW-THROUGH VERTICAL DISCHARGE POSITION. PERMANENTLY LUBRICATED TOTALLY ENCLOSED TYPE MOTORS SHALL BE PROVIDED AND SHALL HAVE BUILT IN CURRENT AND THERMAL OVERLOAD PROTECTION. MOTOR(S) SHALL BE BALL BEARING TYPE.

F. UNITS SHALL BE COMPLETELY FACTORY WIRED WITH NECESSARY CONTROLS AND CONTACTOR WITH PRESSURE LUGS OR TERMINAL BLOCK FOR POWER WIRING. CONTROL WIRING SHALL BE 24-VOLT CONTROL CIRCUIT WHICH INCLUDES FUSING AND CONTROL TRANSFORMER.

G. DEFROST CONTROLS SHALL INCLUDE ELECTRONIC TIME INITIATED, TEMPERATURE TERMINATED DEFROST SYSTEM. TIMED OVERRIDE LIMITS DEFROST CYCLE TO 10 MINUTES.

H. LOW AMBIENT HEAD PRESSURE SHALL BE PROVIDED TO MODULATE THE RPM OF UNIT OUTDOOR FAN MOTOR IN RESPONSE TO OUTDOOR AMBIENT TEMPERATURES AND UNIT HEAD PRESSURE. PROVIDE UNIT COOLING OPERATION TO OUTDOOR TEMPERATURE 0 DEGREES F.

I. PROVIDE ANTI-SHORT-CYCLE TIMER TO PREVENT RAPID ON-OFF COMPRESSOR CYCLING IN LIGHT LOAD CONDITIONS BY NOT ALLOWING COMPRESSOR TO OPERATE FOR 5-7 MINUTES UPON SHUTDOWN. TIMER SHALL CONSIST OF A SOLID STATE TIMING DEVICE, 24-VOLT, 60 CYCLE.

J. WARRANTY:
1. PROVIDE A WRITTEN WARRANTY AGREEING TO REPLACE COMPONENTS THAT FAIL IN MATERIALS AND WORKMANSHIP WITHIN THE SPECIFIED WARRANTY PERIOD, PROVIDED MANUFACTURER'S WRITTEN INSTRUCTIONS FOR INSTALLATION, OPERATION, AND MAINTENANCE HAVE BEEN FOLLOWED.
2. WARRANTY PERIOD: MANUFACTURERS STANDARD, BUT NOT LESS THAN FIVE (5) YEARS FROM DATE OF SUBSTANTIAL COMPLETION FOR COMPRESSOR(S) AND ONE (1) YEAR FOR ALL OTHER COMPONENTS.

K. UNITS SHALL BE JCI, CARRIER OR APPROVED EQUAL. INSTALL UNIT IN ACCORDANCE WITH MANUFACTURER=S INSTRUCTIONS.

SECTION 15855 - SPLIT SYSTEM DX AIR HANDLING UNITS

A. AIR HANDLING UNITS SHALL BE COMPLETELY FACTORY ASSEMBLED INCLUDING COIL, CONDENSATE DRAIN PAN, FAN MOTOR(S), FILTERS AND CONTROLS IN AN INSULATED CASING THAT CAN BE APPLIED IN EITHER VERTICAL OR HORIZONTAL CONFIGURATION. UNITS SHALL BE RATED AND TESTED IN ACCORDANCE WITH ARI STANDARD. UNITS SHALL BE UL LISTED AND LABELED IN ACCORDANCE WITH UL 465 AND UL 1995 FOR INDOOR BLOWER COIL UNITS.

B. UNIT CASING SHALL BE CONSTRUCTED OF ZINC COATED, MINIMUM 20 GAUGE, G-90 GALVANIZED STEEL. CASING SHALL BE COMPLETELY INSULATED WITH FIRE-RETARDANT, PERMANENT, ODORLESS GLASS FIBER MATERIAL WITH R-VALVE NOT LESS THAN 4. KNOCKOUTS SHALL BE PROVIDED FOR UNIT ELECTRIC POWER AND REFRIGERANT PIPING CONNECTIONS. CAPTIVE SCREWS SHALL BE STANDARD ON ALL ACCESS PANELS.

C. DIRECT EXPANSION COIL SHALL BE ALUMINUM FIN SURFACE MECHANICALLY BONDED TO 3/8 INCH INTERNALLY ENHANCED COPPER TUBING AND FACTORY PRESSURE AND LEAK TESTED AT 375 PSIG.

D. CONDENSATE DRAIN PAN SHALL BE ONE-PIECE, CORROSION RESISTANT, AND FULLY DRAINABLE. COIL SHALL BE MOUNTED ABOVE, NOT IN, THE DRAIN PAN TO ALLOW FULL INSPECTION OR CLEANING OF DRAIN PAN. UNIT SHALL CONTAIN CONDENSATE DRAIN PANS FOR BOTH HORIZONTAL AND VERTICAL APPLICATIONS. DRAIN PANS SHALL HAVE CONNECTIONS ON BOTH SIDES OF THE UNIT. INSTALL FULL SIZE CONDENSATE DRAIN PIPING FROM UNIT TO LOCATION INDICATED ON PLAN. DRAIN LINE SHALL BE INSTALLED WITH A SLOPE OF NOT LESS THAN 1/8 INCH PER FOOT DOWN IN THE DIRECTION OF FLOW.

E. BLOWER FAN SHALL BE DOUBLE INLET, DOUBLE WIDTH, FORWARD CURVED, CENTRIFUGAL-TYPE FAN(S) WITH ADJUSTABLE BELT DRIVE UNLESS NOTED OTHERWISE. THERMAL OVERLOAD PROTECTION SHALL BE STANDARD ON MOTOR. FAN AND MOTOR BEARINGS SHALL BE PERMANENTLY LUBRICATED.

F. MAGNETIC MOTOR STARTER, LOW VOLTAGE TERMINAL STRIP, AND SINGLE POINT POWER ENTRY SHALL BE INCLUDED. ALL NECESSARY CONTROLS SHALL BE FACTORY-INSULATED AND WIRED. EVAPORATOR DEFROST CONTROL SHALL BE INCLUDED TO PREVENT COMPRESSOR SLUGGING BY TEMPORARILY INTERRUPTING COMPRESSOR OPERATION WHEN LOW EVAPORATOR COIL TEMPERATURES ARE ENCOUNTERED.

G. FILTERS SHALL BE ONEINCH, THROW-AWAY TYPE FILTERS FILTERS SHALL BE ACCESSIBLE FROM EITHER SIDE THROUGH THE COIL ACCESS PANEL.

H. PROVIDE UNIT MOUNTED ELECTRIC HEATERS AS SCHEDULED. ELECTRIC HEAT ASSEMBLY SHALL BE UL, ETL, AND CSA APPROVED FOR DIRECT INSTALLATION ON FAN DISCHARGE. HEATER ASSEMBLY SHALL HAVE SINGLE-POINT POWER WIRING AND INCLUDE CONTACTORS WITH 24 VOLT COILS, POWER WIRING, 24 VOLT CONTROL WIRING TERMINAL BLOCKS, AND A HINGED ACCESS PANEL. ELECTRIC HEATER ELEMENTS SHALL BE CONSTRUCTED OF HEAVY-DUTY NICKEL CHROMIUM ELEMENTS.

I. UNITS SHALL BE YORK, CARRIER OR APPROVED EQUAL. INSTALL UNIT IN ACCORDANCE WITH MANUFACTURER=S INSTRUCTIONS.

Pinnacle ENGINEERING, INC
Engineering & Design Consultants
2031 Shady Crest Dr
Birmingham, AL 35216
(205) 733-6912 FAX: (205) 733-6913
Job No.26152

AHO ARCHITECTS, LLC
www.ahoarch.com

STATE OF TEXAS
JAMES HOGLAND, JR.
93348
8/12/26

Express Oil Change & Tire Engineers

Single Building / Right Hand Oil Change / Rear Enter / Side Tire Storage

Cross Roads, Texas (Aubrey)

FINAL

No.	Description	Date
IFP-0	Issued for Permit	06/30/26
IFB-0	Iss. fo Bid/AHJ Rev.	08/12/2026

© 2026 Aho Architects, LLC. All Rights Reserved.

Mechanical Specifications

Project number	26013
Date	06/30/2026
Drawn by	CA
Checked by	JB

M0.02

Scale 12" = 1'-0"

SECTION 15870 - POWER VENTILATORS

A. POWER VENTILATORS WHICH ARE SCHEDULED OR REFERRED TO BY MODEL NUMBER OR CATALOGUE NUMBER ARE INTENDED TO INCLUDE ALL MATERIALS COVERED BY SUCH NUMBER. ANY REQUIRED ACCESSORIES FOR THE INSTALLATION OF THE FAN ARE TO BE BY THE SAME MANUFACTURER UNLESS OTHERWISE NOTED.

B. ALL WIRING AND ELECTRICAL COMPONENTS SHALL COMPLY WITH THE NATIONAL ELECTRIC CODES (NEC). ALL MATERIALS SHALL BE UL LISTED. FANS SHALL BE UL 705. FANS SHALL BEAR THE AMCA CERTIFIED RATINGS SEAL FOR SOUND AND AIR PERFORMANCE. FAN ASSEMBLY SHALL BEAR AN ENGRAVED ALUMINUM NAMEPLATE. FANS WHEELS SHALL BE BALANCED IN ACCORDANCE WITH AMCA STANDARD 204-96.

C. EACH UNIT SHALL HAVE A BIRDSCREEN CONSTRUCTED OF GALVANIZED WIRE MESH WITH 2 IN. OPENINGS MOUNTED VERTICALLY IN THE UNIT DISCHARGE. THE BIRDSCREEN SHALL PRODUCE MINIMAL EFFECT ON AIR AND SOUND PERFORMANCE.

D. INSTALL FAN IN ACCORDANCE WITH MANUFACTURER'S INSTALLATION INSTRUCTIONS. INSTALL FANS WITH CLEARANCES FOR SERVICE AND MAINTENANCE. MAKE FINAL DUCT CONNECTIONS TO FANS WITH FLEXIBLE CONNECTORS.

E. ROOF CURBS SHALL BE CONSTRUCTED USING MINIMUM 14 GAUGE GALVANIZED STEEL WITH FULLY MITERED AND WELDED CORNERS, INTEGRAL BASE PLATES INTERNALLY REINFORCED WITH 1 IN. X L IN. X 1/8 IN. STEEL ANGLE, FACTORY INSULATED WITH L. L/2 IN. THICK THREE POUND PER CU. FT. DENSITY FIBERGLASS INSULATION. CURBS SHALL BE FABRICATED WITHOUT CANTS. MINIMUM HEIGHT OF CURB SHALL BE 8 IN. ABOVE FINISHED ROOF. CURBS SHALL BE CONSTRUCTED TO MATCH SLOPE OF ROOF AND PROVIDE A LEVEL TOP SURFACE FOR MOUNTING OF MECHANICAL EQUIPMENT.

F. BACK DRAFT DAMPER SHALL BE 6063TS EXTRUDED ALUMINUM FRAME, .025 IN THICK FORMED ALUMINUM BLADES, EXTRUDED VINYL EDGE SEALS, SYNTHETIC BEARINGS, MILL FINISH.

G. DOWNBLAST CENTRIFUGAL ROOF EXHAUSTER - BELT DRIVE:

1. FAN SHALL BE SPUN ALUMINUM OF BOLTED AND WELDED CONSTRUCTION UTILIZING CORROSION RESISTANT FASTENERS. THE SPUN ALUMINUM STRUCTURAL COMPONENTS SHALL BE CONSTRUCTED OF MINIMUM 16 GAUGE MARINE ALLOY ALUMINUM, BOLTED TO A RIGID ALUMINUM SUPPORT STRUCTURE. THE ALUMINUM BASE SHALL HAVE CONTINUOUSLY WELDED CURB CAP CORNERS FOR MAXIMUM LEAK PROTECTION. THE DISCHARGE BAFFLE SHALL HAVE A ROLLED BEAD.

2. AN INTEGRAL CONDUIT CHASE SHALL BE PROVIDED THROUGH THE CURB CAP AND INTO THE MOTOR COMPARTMENT TO FACILITATE WIRING CONNECTIONS.

3. FAN WHEEL SHALL BE CENTRIFUGAL BACKWARD INCLINED, CONSTRUCTED OF 100% ALUMINUM, INCLUDING A PRECISION MACHINED CAST ALUMINUM HUB. WHEEL INLET SHALL OVERLAP AN AERODYNAMIC ALUMINUM INLET CONE. MOTOR SHALL BE HEAVY DUTY TYPE WITH PERMANENTLY LUBRICATED SEALED BALL BEARINGS AND FURNISHED AT THE SPECIFIED VOLTAGE, PHASE AND ENCLOSURE.

4. BEARINGS SHALL BE DESIGNED AND INDIVIDUALLY TESTED SPECIFICALLY FOR USE IN AIR HANDLING APPLICATIONS. CONSTRUCTION SHALL BE HEAVY DUTY REGREASABLE BALL TYPE IN A CAST IRON HOUSING SELECTED FOR A MINIMUM L50 LIFE IN EXCESS OF 200,000 HOURS AT MAXIMUM CATALOGED OPERATING SPEED.

5. BEARINGS AND DRIVES SHALL BE MOUNTED ON A MINIMUM 14 GAUGE STEEL ASSEMBLY, ISOLATED FROM THE UNIT STRUCTURE WITH RUBBER VIBRATION ISOLATORS. THESE COMPONENTS SHALL BE ENCLOSED IN A WEATHER TIGHT COMPARTMENT, SEPARATED FROM THE EXHAUST AIRSTREAM. DRIVES SHALL BE PRECISION MACHINED CAST IRON TYPE, KEYED AND SECURELY ATTACHED TO THE WHEEL AND MOTOR SHAFTS. DRIVES SHALL BE SIZED FOR 150% OF THE INSTALLED MOTOR HORSEPOWER. BELTS SHALL BE OIL AND HEAT RESISTANT, NON-STATIC TYPE.

6. FAN SHALL BE MODEL ACE-B AS MANUFACTURED BY LOREN COOK COMPANY. GREENHECK, ACME AND PENN VENTILATOR ARE APPROVED EQUAL.

H. SQUARE INLINE EXHAUSTER - DIRECT DRIVE:

1. THE FAN SHALL BE OF BOLTED AND WELDED CONSTRUCTION UTILIZING CORROSION RESISTANT FASTENERS. HOUSING SHALL BE MINIMUM 18 GAUGE STEEL WITH AIRFLOW STRAIGHTENING VANES, INTEGRAL DUCT FLANGES AND HINGED ACCESS DOOR.

2. FAN WHEEL SHALL BE CENTRIFUGAL BACKWARD INCLINED, CONSTRUCTED OF 100% ALUMINUM, INCLUDING A PRECISION MACHINED CAST ALUMINUM HUB. WHEEL INLET SHALL OVERLAP AN AERODYNAMIC ALUMINUM INLET CONE.

3. MOTOR SHALL BE HEAVY DUTY TYPE WITH PERMANENTLY LUBRICATED SEALED BALL BEARINGS AND FURNISHED AT THE SPECIFIED VOLTAGE, PHASE AND ENCLOSURE.

4. FAN SHALL BE MODEL SQI-D AS MANUFACTURED BY LOREN COOK COMPANY. GREENHECK, ACME AND PENN VENTILATOR ARE APPROVED EQUAL.

I. CEILING MOUNTED EXHAUST FAN - DIRECT DRIVE:

1. GC 100 SERIES: THE FAN WHEEL HOUSING AND INTEGRAL OUTLET DUCT SHALL BE INJECTION MOLDED FROM A SPECIALLY ENGINEERED RESIN EXCEEDING UL REQUIREMENTS FOR SMOKE AND HEAT GENERATION. THE OUTLET DUCT SHALL HAVE PROVISION FOR AN ALUMINUM BACKDRAFT DAMPER WITH CONTINUOUS ALUMINUM HINGE ROD. THE INLET BOX SHALL BE MINIMUM 22 GAUGE GALVANIZED STEEL. MOTOR SHALL BE ISOLATION MOUNTED TO A ONE PIECE GALVANIZED STAMPED STEEL INTEGRAL MOTOR MOUNT/INLET. A FIELD WIRING COMPARTMENT WITH RECEPTACLE SHALL BE STANDARD. TO ACCOMMODATE DIFFERENT CEILING THICKNESS, AN ADJUSTABLE PREPUNCHED MOUNTING BRACKET SHALL BE PROVIDED. A WHITE, NON-YELLOWING, HIGH IMPACT STYRENE INJECTION MOLDED GRILL SHALL BE PROVIDED AS STANDARD. WHEEL SHALL BE CENTRIFUGAL FORWARD CURVED TYPE, INJECTION MOLDED OF POLYPROPYLENE RESIN.

2. MOTOR SHALL BE OPEN DRIP PROOF TYPE WITH PERMANENTLY LUBRICATED SEALED BEARINGS AND INCLUDE IMPEDANCE OR THERMAL OVERLOAD PROTECTION AND DISCONNECT PLUG. MOTOR SHALL BE FURNISHED AT THE SPECIFIED VOLTAGE.

3. FAN SHALL BE MODEL GC AS MANUFACTURED BY LOREN COOK COMPANY. GREENHECK, ACME AND PENN VENTILATOR ARE APPROVED EQUAL.

SECTION 15892 - LOW PRESSURE DUCTWORK

A. GENERAL
1. DUCT SYSTEM SHALL BE FABRICATED WITH SHEET METAL THICKNESSES AND REINFORCED IN ACCORDANCE WITH SMACNA, AS SHOWN ON THE DRAWINGS AND AS DESCRIBED HEREIN. DUCTS 18 INCHES AND LARGER ON ANY SIDE SHALL BE STIFFENED BY BEADING ON NOT TO EXCEED 12 INCH CENTERS. UNLESS NOTED OTHERWISE THE MINIMUM PRESSURE/VELOCITY CLASSIFICATION SHALL BE 2 INCH W.G. PLUS OR MINUS, AT 2500 FT. PER MINUTE, DUCT SEAL CLASS "A". DUCT SIZES SHOWN ARE CLEAR INSIDE DIMENSIONS.
2. DUCTWORK HANGERS SHALL BE SUPPORTED BY FASTENERS ATTACHED TO STRUCTURAL STEEL. REPAIR FIRE PROOFING WHICH WAS REMOVED FOR DUCTWORK INSTALLATION. INSTALLATION TO BE DONE BY AN APPROVED QUALIFIED TRADESMAN.
3. INSTALL IN THE DUCTWORK DEVICES FURNISHED BY THE TEMPERATURE CONTROLS SUB-CONTRACTOR. INSTALL SMOKE DETECTORS IN DUCTWORK FURNISHED BY THE DIVISION 16 CONTRACTOR.
4. WATER AND OTHER PIPES SHALL NOT BE ALLOWED TO PASS THROUGH AIR RISERS OR DUCTS, UNLESS APPROVED BY THE ENGINEERS, AND WHEN THIS OCCURS, THE SIZE OF SAID DUCT OR RISER SHALL BE PROPORTIONATELY INCREASED. SANITARY WASTE AND VENT PIPING SHALL NOT PENETRATE ANY DUCTWORK.

B. GALVANIZED STEEL DUCTWORK:
1. GALVANIZED STEEL DUCTWORK SHALL CONFORM TO ASTM A653 (G60). ALL LONGITUDINAL SEAMS SHALL BE GROOVED, DOUBLE OR PITTSBURGH TYPE.

C. DUCTWORK FITTINGS:
1. FOR RECTANGULAR DUCTWORK, VANES SHALL BE PROVIDED IN ELBOWS WITH 90 DEGREE THROATS AND THROAT RADII LESS THAN 1-1/2 TIMES DUCT WIDTH. VANES SHALL BE LOCATED IN ACCORDANCE WITH ASHRAE STANDARDS. DOUBLE-VANE AIRFOIL-TYPE TURNING VANES SHALL BE PROVIDED FOR ALL SQUARE TURNS.

D. HANGERS AND SUPPORTS:
1. PROVIDE CONCRETE INSERTS ON STRUCTURAL STEEL FASTENERS APPROPRIATE FOR BUILDING MATERIALS. PROVIDE TRAPEZE AND RISER SUPPORTS AS REQUIRED. SUPPORT MATERIALS SHALL BE THE SAME AS DUCTWORK SUPPORTING.
2. HANGER, STRAPS AND RODS SHALL WITH SMACNA'S "HVAC DUCT CONSTRUCTION STANDARDS METAL AND FLEXIBLE" STANDARDS
3. DUCT ATTACHMENTS: SHEET METAL SCREWS, BLIND RIVETS OR SELF-TAPPING METAL SCREWS; COMPATIBLE WITH DUCT MATERIALS.

E. SEALANT MATERIAL:
1. SEALANTS SHALL BE SOLVENT OR WATER BASED TYPE U.L. CLASSIFIED MEETING NFPA 90A CLASS 1 WITH ZERO FIRE AND SMOKE DEVELOPMENT RATING. SEALER SHALL BE UNITED SHEET METAL, UNITED DUCT SEALER, OR HARDCAST IRON GRIP NO. 601, TRANSVERSE SEAMS SHALL BE TAPED AND SEALED WITH TWO LAYERS OF UNITED SHEET METAL, UNI-CAST OR CAULKED WITH DUCT SEALER.

F. FLEXIBLE CONNECTORS:
1. INSTALL FLEXIBLE CONNECTORS AT ALL SUPPLY AND EXHAUST FANS AND OTHER AIR HANDLING UNITS WITH INLET AND OUTLET DUCT OR CASING CONNECTIONS. CONNECTORS SHALL NOT BE PAINTED. CONNECTORS SHALL NOT BE USED AS TRANSITION PIECES BETWEEN FAN AND DUCTWORK.
2. CONNECTORS SHALL BE NOT LESS THAN 4 INCHES LONG (IN CLEAR) AND PROPERLY ATTACHED TO DUCT AND FAN CONNECTION COLLAR BY 1 X 1/8 INCH DRAW BAND (FABRICATED OF THE SAME MATERIAL AS ADJACENT DUCTWORK) FIRMLY CLAMPED AROUND COLLARS IN SUCH A MANNER AS TO BE AIRTIGHT AND SECURED TO COLLARS WITH SHEET METAL SCREWS.
3. FLEXIBLE CONNECTORS SHALL BE U.L. LISTED, NEOPRENE COATED HEAVY GLASS FABRIC. FABRIC SHALL BE VENTGLAS, MANUFACTURED BY VENTFABRICS, INC.

G. FLEXIBLE DUCTWORK:
1. FLEXIBLE DUCTS SHALL BE USED FOR STRAIGHT runs OF DUCT OR OFFSETS UP TO 45 DEGREES, BUT NOT EXCEEDING 48 INCHES IN LENGTH. THE USE OF FLEXIBLE DUCTS AS ELBOWS WITH MORE THAN A 45 DEGREE BEND WILL NOT BE PERMITTED.
2. FLEXIBLE DUCT SHALL BE UL LISTED AND LABELED AS CLASS 1, AIR DUCT CONNECTOR, IN ACCORDANCE WITH U.L. STANDARD 181 AND SHALL MEET THE REQUIREMENTS OF THE LATEST NFPA BULLETIN, NO. 90A AND NO. 90B FOR FLAME SPREAD AND SMOKE DEVELOPMENT RATING.
3. FLEXIBLE DUCT SHALL BE RATED FOR A MAXIMUM PRESSURE OF 6 INCH POSITIVE AND 3/4 INCH NEGATIVE AND 4000 FPM MAXIMUM VELOCITY. AIR DUCT SHALL CONSIST OF: CPE LINER, COATED SPRING STEEL WIRE HELIX, FIBERGLASS INSULATING BLANKET, FIBERGLASS SCRIM AND REINFORCED ALUMINUM VAPOR BARRIER. THERMAL CONDUCTANCE SHALL BE .23 OR LESS.
4. DUCT SHALL BE FLEXMASTER TYPE 8M OR PRIOR APPROVED EQUAL.

A. VOLUME DAMPERS:
1. SINGLE BLADE DAMPERS SHALL BE CONSTRUCTED OF .22 GAUGE GALVANIZED STEEL (BLADE AND FRAME). SINGLE BLADE DAMPERS SHALL BE LIMITED TO A 12 INCH HIGH BLADE. BLADE EDGES SHALL BE CRIMPED OR REINFORCED. DAMPER LEVERS SHALL INDICATE POSITIVELY THE OPEN AND CLOSED POSITION. END BEARINGS SHALL BE MOLDED SYNTHETIC. DAMPERS SHALL BE RUSKIN MD25 OR APPROVED EQUAL (RUSKIN MDRS25 FOR ROUND DUCTS).
2. MULTIBLADE DAMPERS SHALL BE CONSTRUCTED OF SHEET METAL THE SAME MATERIAL AS THE ADJACENT DUCTWORK. DAMPER FRAME SHALL BE NOT LESS THAN 16 GA., DAMPER BLADES NOT WIDER THAN 6 INCHES CRIMPED OR REINFORCED. DAMPER LEVERS SHALL INDICATE POSITIVELY THE OPEN AND CLOSED POSITION. END BEARINGS SHALL BE MOLDED SYNTHETIC. DAMPER SHALL BE RUSKIN MD35 OR APPROVED EQUAL.

B. FIRE DAMPERS:
1. FIRE DAMPERS SHALL BE UNDERWRITERS APPROVED AND LABELED (UL555). DAMPERS SHALL BE FABRICATED OF GALVANIZED STEEL AND SHALL BE OF SUCH A DESIGN AND LENGTH AS TO FUNCTION AS A WALL MOUNTING SLEEVE, WHICH SHALL BE A PART OF THE FIRE DAMPER. SLEEVES SHALL BE OF WELDED OR BOLTED CONSTRUCTION. CRIMPING OR TABS WILL NOT BE ACCEPTABLE SUBSTITUTES FOR WELDING OR BOLTING.
2. FIRE DAMPERS SHALL BE RUSKIN DIDB2 SERIES FOR 1 2 HOUR RATING. FIRE DAMPERS SHALL BE RUSKIN DIDB23 SERIES FOR 3 HOUR RATING. INSTALL STYLE A FIRE DAMPERS BEHIND DUCTED GRILLES AND REGISTERS IN RATED WALLS. INSTALL STYLE B OR C FIRE DAMPERS IN DUCTED OPENINGS IN RATED WALLS. AIR BALANCE AND PREFCO ARE APPROVED EQUAL.

C. DAMPER HARDWARE:
1. ALL HARDWARE SHALL BE SMACNA ACCEPTED. INSULATED DUCTWORK (CONCEALED) - VENTLOK 638 ELEVATED DIAL REGULATOR. INSULATED DUCTWORK (EXPOSED) - VENTLOK 644 - SELF LOCKING REGULATOR. UNINSULATED DUCTWORK - VENTLOK 555 OR 560 QUADRANTS.

D. DUCT ACCESS DOORS:
1. ACCESS DOORS SHALL BE HINGED, CONSTRUCTED OF THE SAME MATERIAL AS THE DUCTWORK. DOOR EDGES SHALL BE SEALED WITH 3/4 INCH WIDE X 1/8 INCH THICK NEOPRENE SPONGE GASKETING. DOOR HARDWARE SHALL BE VENTLOK #100 LATCHES. ACCESS DOORS ON INSULATED DUCTWORK SHALL BE DOUBLE WALL CONSTRUCTION WITH 1 INCH OF RIGID 3 PCF FIBERGLASS INSULATION.
2. PROVIDE DUCT ACCESS DOORS AT ALL DUCT MOUNTED DEVICES REQUIRING ADJUSTMENT OR RESETTING. ACCESS DOORS SHALL BE APPROXIMATELY 18 INCHES HIGH BY 24 INCHES WIDE. IN SMALLER DUCTWORK, THE HEIGHT SHALL BE REDUCED TO BE 2 INCHES LESS THAN THAT OF THE DUCTWORK.

SECTION 15906 - TEMPERATURE CONTROLS

A. GENERAL:
1. FURNISH AND INSTALL AN ELECTRIC SYSTEM OF AUTOMATIC TEMPERATURE CONTROL AS SPECIFIED HEREIN AND AS SHOWN ON THE CONTRACT DRAWINGS AS MANUFACTURED BY HONEYWELL, JOHNSON CONTROLS, INVENSYS, OR APPROVED EQUAL.
2. EXTRA COSTS INCURRED BY USE OF OTHER THAN BASE BID CONTROL SYSTEM, SUCH AS WIRING, CONTRACT DRAWINGS CHANGES, CHANGES IN DESIGN, ADDED SUPERVISION, ETC., SHALL BE THE RESPONSIBILITY OF THE TEMPERATURE CONTROL SUBCONTRACTOR (TCSC).
3. SYSTEM DOCUMENTATION SHALL INCLUDE THE FOLLOWING: MANUFACTURER'S DATA SHEETS OF ALL PROTOCTS (ORIGINAL COPIES), COMPLETE DESCRIPTION OF OPERATION OF ALL CONTROL LOOPS, INCLUDING RECOMMENDED SETPOINTS AND RANGES OF ADJUSTMENT; FULLY LABELED ELEMENTARY DIAGRAM (ELECTRICAL LADDER DIAGRAM), AND LISTS OF ALL PROPOSED DEVICES AND EQUIPMENT

B. MOTOR OPERATORS: MOTOR OPERATOR SHALL BE SPRING RETURN TYPE, WHICH RETURNS MOTOR ACTUATOR SHAFT TO ITS FULL NORMAL MECHANICAL TRAVEL UPON POWER FAILURE. DAMPER MOTOR DRIVE MECHANISM WILL INCLUDE HOLDING BRAKE TO KEEP THE RETURN SPRING FROM DRAWING THE ACTUATOR FROM DRIVING TOWARD ITS NORMAL POSITION UNLESS POWER IS INTERRUPTED. SUPPLY AND INSTALL ELECTRIC MOTOR OPERATORS FOR ALL DAMPERS. UNIT SHALL BE HONEYWELL MSR105A SERIES OR APPROVED EQUAL.

C. AUTOMATIC DAMPERS: ALL CONTROL DAMPERS SHALL BE STANDARD PRODUCTS OF DAMPER OR TEMPERATURE CONTROL MANUFACTURERS UNLESS NOTED OTHERWISE. LOCAL FABRICATION OF DAMPERS IS NOT ALLOWED. DAMPERS SHALL BE OPPOSED BLADE TYPE. FURNISH FOR INSTALLATION BY THE MECHANICAL CONTRACTOR ALL MOTOR OPERATED DAMPERS. DAMPERS SHALL BE RUSKIN MODEL CD50. GREENHECK IN AN APPROVED EQUAL.

D. THERMOSTATS:
1. PROVIDE HVAC THERMOSTAT WITH THE FOLLOWING FEATURES: SEVEN DAY PROGRAMMING, TWO OCCUPIED/TWO UNOCCUPIED PERIODS PER DAY, AUTOMATIC HEAT/COOL CHANGEOVER WITH 2°F MINIMUM DEAD BAND, TWO STAGE HEATING, TWO STAGE COOLING, TOUCHSCREEN DISPLAY, AUXILIARY CONTACT, AND TEMPERATURE OVERRIDE. THERMOSTAT SHALL BE HONEYWELL VISIONPRO 8000 OR EQUAL.
2. PROVIDE HEATER AND VENTILATION THERMOSTAT WITH THE FOLLOWING FEATURES: SINGLE STAGE CONTROL, ON/OFF/AUTO SWITCHING, AND ADJUSTABLE SETPOINT CONTROL

E. TEMPERATURE CONTROL WIRING:
1. ALL CONTROL WIRING AND CONDUIT REQUIRED TO COMPLETE THE TEMPERATURE CONTROL SYSTEM SHALL BE PROVIDED BY THE TEMPERATURE CONTROL SUB-CONTRACTOR. ALL WIRING SHALL CONFORM TO STANDARDS AND SPECIFICATIONS OUTLINED IN DIVISION 16. WIRE SIZE SHALL BE IN ACCORDANCE WITH MANUFACTURER'S RECOMMENDATIONS AND NATIONAL ELECTRIC CODE. MINIMUM CONDUIT SHALL BE 1/2 INCH DIAMETER. TCSC SHALL COORDINATE ALL CONTROL POWER REQUIREMENTS WITH ELECTRICAL CONTRACTOR PRIOR TO BID.
2. ELECTRIC CONNECTIONS BETWEEN THE VARIOUS UNIT CONTROL CABINETS SHALL BE MADE BY THE TCSC. ALL WIRING MUST BE TAGGED ON BOTH ENDS WITH PANEL NUMBER AND TERMINAL NUMBER.
3. THE TCSC IS RESPONSIBLE FOR ALL REQUIRED PROCESS AND ELECTRICAL CONNECTIONS TO ALL EQUIPMENT, CONTROL DEVICES, AND FIELD INSTRUMENTS. TCSC SHALL FURNISH AND INSTALL ALL CONDUITS, RACEWAYS, ETC., REQUIRED. TCSC SHALL FURNISH AND INSTALL ALL CONTROL AND INTERLOCK WIRING. TCSC SHALL FURNISH AND INSTALL ALL REQUIRED AUXILIARY STARTER CONTACTS OR RELAYS, ETC., FOR A COMPLETE ELECTRICAL INTERLOCK AND CONTROL WIRING SYSTEM.

F. INSTALLATION:
1. THE ENTIRE CONTROL SYSTEM, INCLUDING LOW VOLTAGE WIRING, WITH THE EXCEPTION OF DUCT MOUNTED AUTOMATIC DAMPERS AND SMOKE DETECTORS, SHALL BE INSTALLED BY THE TEMPERATURE CONTROL CONTRACTOR, WHO SHALL MAKE ALL TESTS AND ADJUSTMENTS. ALL CONTROLS SHALL BE FIELD-TESTED AND FIELD-CALIBRATED.
2. SET POINTS OF ALL CONTROLLING INSTRUMENTS ARE INDICATED AT A SPECIFIC POINT; HOWEVER, ALL SET POINTS SHALL BE ADJUSTABLE UP AND DOWN FROM THE POINT INDICATED.
3. CONTRACTOR SHALL SUBMIT TENTATIVE LOCATIONS OF ALL CONTROL DEVICES AND COMPONENTS (INCLUDING TEMPERATURE SENSORS) TO THE ARCHITECT FOR WRITTEN APPROVAL PRIOR TO INSTALLATION. CONTRACTOR SHALL PAY PARTICULAR ATTENTION TO LOCATION OF CONTROL DEVICES AND COMPONENTS TO LOCATION OF CONTROL DEVICES AND COMPONENTS. EFFECTS OF DRAFTS, RADIANT HEAT, VIBRATION, ETC ARE TO BE CONSIDERED WHEN INSTALLING CONTROL DEVICES AND COMPONENTS.
4. PRIOR TO ORDERING FACTORY ASSEMBLED EQUIPMENT WHICH CONTAINS INTEGRAL CONTROL DEVICES AND COMPONENTS, THE CONTRACTOR SHALL OBTAIN A WRITTEN STATEMENT FROM BOTH THE MANUFACTURER AND THE INSTALLING CONTRACTOR THAT THEY HAVE REVIEWED THE APPROPRIATE SUBMITTAL DATA AND ARE AWARE OF THE MAKE, MODEL, TYPE, SIZE, CHARACTERISTICS, ETC. OF THE FACTORY ASSEMBLED CONTROL DEVICES AND COMPONENTS WHICH THEY SHALL BE REQUIRED TO INTERFACE TO AND/OR CONTROL.
5. ALL CONTROL DEVICES (BOTH FIELD AND PANEL MOUNTED) SHALL BE LABELED TO INDICATE BOTH THEIR CONTROL SYSTEMS DESIGNATION, E.G., RTU-1 THERMOSTAT. UNLESS INDICATED OTHERWISE, ABBREVIATIONS AND ACRONYMS FOR ALL ID TAGS AND PANEL FACEPLATES SHALL BE APPROVED BY THE ENGINEER.
6. ALL CONTROL DEVICES ARE TO BE MOUNTED IN ACCESSIBLE LOCATIONS. ALL DEVICES EXPOSED TO THE WEATHER SHALL BE HOUSED IN WEATHERPROOF ENCLOSURES.
7. AT THE COMPLETION OF THE JOB, TCSC SHALL CORRECT HIS DRAWINGS TO INCLUDE ANY CHANGES MADE DURING CONSTRUCTION. TCSC SHALL PROVIDE COLOR-CODED DRAWINGS INDICATED ALL TEMPERATURE ZONES AND EQUIPMENT (3 COPIES).

G. OPERATION TEST AND OWNER'S INSTRUCTION:
1. AT COMPLETION, TCSC SHALL OPERATE THE SYSTEM FOR A PERIOD OF AT LEAST THREE DAYS OF EIGHT HOURS EACH ON THE NEW SYSTEMS TO DEMONSTRATE FULFILLMENT OF THE REQUIREMENTS OF THE CONTRACT. DURING THIS TIME, ALL ADJUSTMENTS SHALL BE MADE TO THE EQUIPMENT SO THAT IT IS IN FIRST-CLASS OPERATING CONDITION. THE ENTIRE SYSTEM IS TO BE LEFT IN OPERATING CONDITION ACCEPTABLE TO THE ENGINEER.
2. UPON COMPLETION OF THE WORK AND ACCEPTANCE BY THE OWNER, TCSC SHALL PROVIDE ONE SCHEDULED FOUR-HOUR PERIOD OF FORMAL INSTRUCTION TO THE OWNER'S OPERATING PERSONNEL WHO HAVE RESPONSIBILITY FOR THE MECHANICAL SYSTEM.

H. SEQUENCE OF OPERATIONS:
1. HVAC UNITS:
1. NORMAL OPERATION:
1. UNITS SHALL BE CONTROLLED BY SPACE THERMOSTAT. FAN SHALL OPERATE CONTINUOUSLY DURING OCCUPIED MODE AND INTERMITTENTLY DURING UNOCCUPIED MODE.
2. HEATING AND COOLING SHALL BE ENABLED BY THERMOSTAT.
3. COOLING SETPOINT SHALL BE 73°F (ADJUSTABLE).
4. HEATING SETPOINT SHALL BE 68°F (ADJUSTABLE).
5. OUTSIDE AIR DAMPER SHALL OPEN DURING OCCUPIED MODE AND CLOSE DURING UNOCCUPIED MODE. OUTSIDE AIR DAMPER SHALL BE NORMALLY CLOSED AND RETURN TO NORMAL POSITION UPON LOSS OF POWER.

2. EXHAUST FANS:
1. INTERLOCK EXHAUST FANS AS NOTED ON SCHEDULE.

SECTION 15936 - REGISTERS, GRILLES AND DIFFUSERS

A. PRODUCT PERFORMANCE DATA SHALL BE TAKEN FROM TESTS CONDUCTED IN ACCORDANCE WITH ANSI/ASHRAE 70, AND ARI-890.

B. THE NOMINAL OR DUCT CONNECTION SIZE OF GRILLES (NOT OVERALL DIMENSIONS) IS GIVEN ON PLANS. GRILLES AND REGISTERS INCLUDING VOLUME CONTROLLERS SHALL BE CONSTRUCTED OF THE SAME MATERIALS SPECIFIED FOR THE GRILLE. THE GRILLE FINISH SHALL BE WHITE UNLESS NOTED OTHERWISE

C. REFER TO ARCHITECTURAL DRAWINGS FOR THE VARIOUS CEILING TYPES. REFER TO DRAWINGS OF REFLECTED CEILING PLANS FOR LOCATION OF CEILING DIFFUSERS AND GRILLES. MOUNTING FRAMES SHALL BE PROVIDED FOR ALL GRILLES AND REGISTERS MOUNTED IN DRYWALL, PLASTER, CONCRETE OR MASONRY OPENINGS.

D. SUPPLIER SHALL CHECK ALL AIR DISTRIBUTION AND RETURN AIR DEVICES FOR PROPER PERFORMANCE, NOISE AND ACCESSORIES. ANY DEVICE EXCEEDING NOISE LEVEL HEREIN SPECIFIED SHALL BE BROUGHT TO THE ATTENTION OF THE ENGINEERS.

E. CONTRACTOR SHALL COORDINATE OPENINGS IN HARD CEILINGS, FURRED WALLS, MASONRY WALLS, AND FLOORS. MOUNT EACH DEVICE SECURELY TO AVOID RATTLING AND VIBRATION. DEVICES SHALL BE PARALLEL TO THE PLANE OF THE SURFACES THEY ARE MOUNTED.

F. CEILING DIFFUSER TYPE A - TITUS MODEL TDC STEEL LOUVERED FACE DIFFUSER WITH 12 X 12 INCH MODULE AND 9 X 9 INCH UNIFORM BACKPAN. DIFFUSER SHALL INCLUDE ROUND NECK, REMOVABLE CORE OF FIXED DEFLECTION LOUVERS AND EQUALIZING GRID. DIFFUSER SHALL BE SUITABLE FOR SURFACE MOUNTING WITH AIR PATTERN AS SHOWN ON DRAWINGS.

G. RETURN/EXHAUST/GRILLES TYPE A - TITUS MODEL 350 RL STEEL GRILLE. GRILL SHALL INCLUDE ONE SET OF FIXED BLADES SET AT 35° DEFLECTION ON 3/4 INCH SPACING].

H. RETURN/EXHAUST/GRILLES TYPE B - TITUS MODEL 50F ALUMINUM EGG CRATE GRILL. GRILLE SHALL INCLUDE 2 X 2 X 2 INCH ALUMINUM GRID.

I. RETURN/EXHAUST GRILLES TYPE C - TITUS MODEL 33R STEEL HEAVY DUTY BAR GRILLE. GRILLE SHALL INCLUDE ONE SET OF FIXED BLADES SET AT 38° DEFLECTION ON 2 INCH SPACING. BARS SHALL BE 14 GAUGE STEEL. BARS SHALL BE REINFORCED BY PERPENDICULAR STEEL BARS SPACED ON 6 INCH MAXIMUM CENTERS.

SECTION 15990 - TESTING, ADJUSTING AND BALANCING

A. THE TEST AND BALANCE CONTRACTOR SHALL BE AN INDEPENDENT CONTRACTOR THAT REGULARLY PERFORMS AIR AND WATER SYSTEMS TESTING AND BALANCING. MINIMUM QUALIFICATIONS FOR ACCEPTANCE SHALL BE GENERAL MEMBERSHIP IN NEBB OR ABC, EXCEPT THAT AFFILIATION WITH MANUFACTURERS, INSTALLING, CONTRACTORS, OR ENGINEERING FIRMS MAY NOT PRECLUDE ACCEPTANCE.

B. PERFORM TESTING AND BALANCING PROCEDURES ON EACH SYSTEM ACCORDING TO THE PROCEDURES CONTAINED IN ASHRAE APPLICATIONS HANDBOOK, AABC OR NEBB NATIONAL STANDARDS.

C. CUT INSULATION, DUCTS, PIPES, AND EQUIPMENT CABINETS FOR INSTALLATION OF TEST PROBES TO THE MINIMUM EXTENT NECESSARY TO ALLOW ADEQUATE PERFORMANCE OF PROCEDURES. AFTER TESTING AND BALANCING, CLOSE PROBE HOLES AND PATCH INSULATION WITH NEW MATERIALS IDENTICAL TO THOSE REMOVED. RESTORE VAPOR BARRIER AND FINISH ACCORDING TO THE INSULATION SPECIFICATIONS FOR THIS PROJECT.

D. MARK EQUIPMENT SETTINGS WITH PAINT OR OTHER SUITABLE, PERMANENT IDENTIFICATION MATERIAL, INCLUDING DAMPER-CONTROL POSITIONS, VALVE INDICATORS, FAN-SPEED-CONTROL LEVERS, AND SIMILAR CONTROLS AND DEVICES, TO SHOW FINAL SETTINGS.

E. SET HVAC SYSTEM AIRFLOW AND WATER FLOW RATES WITHIN THE FOLLOWING TOLERANCES:
1. SUPPLY, RETURN, AND EXHAUST FANS: PLUS 5 TO PLUS 10 PERCENT.
2. AIR OUTLETS AND INLETS: 0 TO MINUS 10 PERCENT.
3. HEATING-WATER FLOW RATE: 0 TO MINUS 10 PERCENT.
4. COOLING-WATER FLOW RATE: 0 TO MINUS 5 PERCENT.

F. WITHIN 90 DAYS OF COMPLETING TESTING, ADJUSTING, AND BALANCING, PERFORM ADDITIONAL TESTING AND BALANCING TO VERIFY THAT BALANCED CONDITIONS ARE BEING MAINTAINED THROUGHOUT AND TO CORRECT UNUSUAL CONDITIONS. IF INITIAL TESTING, ADJUSTING, AND BALANCING PROCEDURES WERE NOT PERFORMED DURING NEAR-PEAK SUMMER AND WINTER CONDITIONS, PERFORM ADDITIONAL INSPECTIONS, TESTING, AND ADJUSTING DURING NEAR-PEAK SUMMER AND WINTER CONDITIONS. A FINAL TEST AND BALANCE REPORT SHALL BE PROVIDED TO THE ENGINEER OF RECORD AND MECHANICAL INSPECTOR AT THE CONCLUSION OF TESTING AND BALANCING THE SYSTEM.

G. THE MECHANICAL CONTRACTOR'S RESPONSIBILITIES: FURNISH THE TEST AND BALANCE CONTRACTOR ONE COMPLETE SET OF ACCEPTED EQUIPMENT DATA AND ONE COMPLETE SET OF ACCEPTED MECHANICAL SHOP DRAWINGS. THE MECHANICAL CONTRACTOR SHALL BE RESPONSIBLE FOR ADVISING THE TEST AND BALANCE CONTRACTOR OF ANY CHANGE(S) MADE TO THE SYSTEM(S) DURING THE CONSTRUCTION PROCESS. MECHANICAL CONTRACTOR SHALL PROVIDE DRAWINGS, SPECIFICATIONS, SHOP DRAWINGS, CONTROL DIAGRAMS, ETC. DETAILING THE CHANGE(S) TO THE TEST AND BALANCE CONTRACTOR. REPLACE AND/OR INSTALL PULLEYS, BELTS, DAMPERS AND TRIM PUMP IMPELLERS AS REQUIRED FOR THE CORRECT BALANCE AS DIRECTED BY THE TEST AND BALANCE CONTRACTOR. ALLOCATE TIME IN THE CONSTRUCTION SCHEDULE FOR TEST AND BALANCE PROCEDURE, ASSIST THE TEST AND BALANCE CONTRACTOR IN COORDINATING WORK WITH THE OTHER TRADES, AND PREPARE THE SYSTEM FOR TESTING AND BALANCING.

Pinnacle ENGINEERING, INC.
Engineering & Design Consultants
2031 Shady Crest Dr
Birmingham, AL 35216
(205) 733-6912 FAX: (205) 733-6913
Job No.26152

AHO AR

COM*check* Software Version COMcheckWeb
Mechanical Compliance Certificate

Project Information

Energy Code:	2021 IECC
Project Title:	EOC - Cross Roads, TX (Aubrey)
Location:	Aubrey, Texas
Climate Zone:	3a
Project Type:	New Construction

Construction Site:	Owner/Agent:	Designer/Contractor:
Aubrey, Texas	Express Oil Change & Tire Engineers 1880 Southpark Drive Birmingham, Alabama 35244 2059451771 jdavis@expressoil.com	James Hogland Pinnacle Engineering 2031 Shady Crest Drive Hoover, Alabama 35216

Additional Efficiency Package(s)
Credits: 10.0 Required 0.0 Proposed

Mechanical Systems List

Quantity	System Type & Description
1	AHU-1 (Single Zone): Heating: 1 each - Central Furnace, Electric, Capacity = 32 kBtu/h No minimum efficiency requirement applies Cooling: 1 each - Split System, Capacity = 34 kBtu/h, Air-Cooled Condenser, Unknown Economizer Proposed Efficiency = 16.00 SEER2, Required Efficiency = 13.40 SEER2 Proposed Part Load Efficiency = 0.00 , Required Part Load Efficiency = 0.00 Fan System: FAN SYSTEM 1 | office -- Compliance (Motor nameplate HP and fan efficiency method) : Passes Fans: FAN 1 Supply, Constant Volume, 1195 CFM, 0.3 motor nameplate hp, 67.00 fan energy index , fan exception: Single fan < 1 HP or < 0.89 kW
1	RH-1 (Single Zone w/ PerimeterSystem): Heating: 1 each - Radiant Heater, Gas, Capacity = 100 kBtu/h No minimum efficiency requirement applies
3	RH-2,3,4 (Single Zone w/ PerimeterSystem): Heating: 1 each - Radiant Heater, Gas, Capacity = 50 kBtu/h No minimum efficiency requirement applies
1	Water Heater: Electric Storage Water Heater, Capacity: 30 gallons w/ Circulation Pump No minimum efficiency requirement applies

Mechanical Compliance Statement
Compliance Statement: The proposed mechanical design represented in this document is consistent with the building plans, specifications, and other calculations submitted with this permit application. The proposed mechanical systems have been designed to meet the 2021 IECC requirements in COM*check* Version COMcheckWeb and to comply with any applicable mandatory requirements listed in the Inspection Checklist.

James Hogland, PE — [signature] — 6/29/26
Name - Title — Signature — Date

COM*check* Software Version COMcheckWeb
Inspection Checklist
Energy Code: 2021 IECC

Requirements: 54.0% were addressed directly in the COM*check* software
Text in the "Comments/Assumptions" column is provided by the user in the COMcheck Requirements screen. For each requirement, the user certifies that a code requirement will be met and how that is documented, or that an exception is being claimed. Where compliance is itemized in a separate table, a reference to that table is provided.

Section # & Req.ID	Plan Review	Complies?	Comments/Assumptions
C103.2 [PR1][1]	Plans and/or specifications provide all information with which compliance can be determined for the building envelope and document where exceptions to the standard are claimed.	☐Complies ☐Does Not ☐Not Observable ☐Not Applicable	
C103.2 [PR2][1]	Plans, specifications, and/or calculations provide all information with which compliance can be determined for the mechanical and service water heating systems and document where exceptions to the standard are claimed. Load calculations per acceptable engineering standards and handbooks. Hot water system sized per manufacturer's sizing guide.	☐Complies ☐Does Not ☐Not Observable ☐Not Applicable	Requirement will be met.
C103.2 [PR4][1]	Plans, specifications, and/or calculations provide all information with which compliance can be determined for the interior lighting and electrical systems and equipment and document where exceptions to the standard are claimed. Information provided should include interior lighting power calculations, wattage of bulbs and ballasts, transformers and control devices.	☐Complies ☐Does Not ☐Not Observable ☐Not Applicable	
C103.2 [PR8][1]	Plans, specifications, and/or calculations provide all information with which compliance can be determined for the exterior lighting and electrical systems and equipment and document where exceptions to the standard are claimed. Information provided should include exterior lighting power calculations, wattage of bulbs and ballasts, transformers and control devices.	☐Complies ☐Does Not ☐Not Observable ☐Not Applicable	
C402.4.1 [PR10][1]	The vertical fenestration area <= 30 percent of the gross above-grade wall area.	☐Complies ☐Does Not ☐Not Observable ☐Not Applicable	
C402.4.1 [PR11][1]	The skylight area <= 3 percent of the gross roof area.	☐Complies ☐Does Not ☐Not Observable ☐Not Applicable	

1 High Impact (Tier 1) | 2 Medium Impact (Tier 2) | 3 Low Impact (Tier 3)

Section # & Req.ID	Plan Review	Complies?	Comments/Assumptions
C402.4.2 [PR14][1]	In enclosed spaces > 2,500 ft2 directly under a roof with ceiling heights >15 ft. and used as an office, lobby, atrium, concourse, corridor, storage, gymnasium/exercise center, convention center, automotive service, manufacturing, non-refrigerated warehouse, retail store, distribution/sorting area, transportation, or workshop, the following requirements apply: (a) the daylight zone under skylights is >= half the floor area; (b) the skylight area to daylight zone is >= 3 percent with a skylight VT >= 0.40; or a minimum skylight effective aperture >= 1 percent.	☐Complies ☐Does Not ☐Not Observable ☐Not Applicable	
C406 [PR9][1]	Plans, specifications, and/or calculations provide all information with which compliance can be determined for the additional energy efficiency package options.	☐Complies ☐Does Not ☐Not Observable ☐Not Applicable	Requirement will be met.

Additional Comments/Assumptions:

1 High Impact (Tier 1) | 2 Medium Impact (Tier 2) | 3 Low Impact (Tier 3)

Section # & Req.ID	Footing / Foundation Inspection	Complies?	Comments/Assumptions
C303.2 [FO4][2]	Slab edge insulation installed per manufacturer's instructions.	☐Complies ☐Does Not ☐Not Observable ☐Not Applicable	
C303.2.1 [FO6][1]	Exterior insulation protected against damage, sunlight, moisture, wind, landscaping and equipment maintenance activities.	☐Complies ☐Does Not ☐Not Observable ☐Not Applicable	
C105 [FO3][2]	Installed slab-on-grade insulation type and R-value consistent with insulation specifications reported in plans and COMcheck reports.	☐Complies ☐Does Not ☐Not Observable ☐Not Applicable	*See the Envelope Assemblies table for values.*
C402.2.4 [FO7][2]	Slab edge insulation depth/length. Slab insulation extending away from building is covered by pavement or >= 10 inches of soil.	☐Complies ☐Does Not ☐Not Observable ☐Not Applicable	*See the Envelope Assemblies table for values.*

Additional Comments/Assumptions:

1 High Impact (Tier 1) | 2 Medium Impact (Tier 2) | 3 Low Impact (Tier 3)

Section # & Req.ID	Framing / Rough-In Inspection	Complies?	Comments/Assumptions
C303.1.3 [FR12][2]	Fenestration products rated in accordance with NFRC certified and as to performance labels or certificates provided.	☐Complies ☐Does Not ☐Not Observable ☐Not Applicable	
C402.4.3 [FR10][1]	Vertical fenestration SHGC value.	☐Complies ☐Does Not ☐Not Observable ☐Not Applicable	*See the Envelope Assemblies table for values.*
C402.4.3, C402.4.3.4 [FR8][1]	Installed vertical fenestration U-factor and SHGC consistent with label specifications and as reported in plans and COMcheck reports.	☐Complies ☐Does Not ☐Not Observable ☐Not Applicable	*See the Envelope Assemblies table for values.*
C402.4.5 [FR14][2]	U-factor of opaque swinging and nonswinging doors associated with the building thermal envelope meets requirements.	☐Complies ☐Does Not ☐Not Observable ☐Not Applicable	*See the Envelope Assemblies table for values.*
C402.5.1 [FR16][1]	The building envelope contains a continuous air barrier that is sealed in an approved manner and either constructed or tested in an approved manner. Air barrier penetrations are sealed in an approved manner.	☐Complies ☐Does Not ☐Not Observable ☐Not Applicable	
C402.5.4 [FR18][3]	Factory-built fenestration and doors are labeled as meeting air leakage requirements.	☐Complies ☐Does Not ☐Not Observable ☐Not Applicable	

Additional Comments/Assumptions:

1 High Impact (Tier 1) | 2 Medium Impact (Tier 2) | 3 Low Impact (Tier 3)

Section # & Req.ID	Plumbing Rough-In Inspection	Complies?	Comments/Assumptions
C404.5, C404.5.1, C404.5.2 [PL6][3]	Heated water supply piping conforms to pipe length and volume requirements. Refer to section details.	☐Complies ☐Does Not ☐Not Observable ☐Not Applicable	Requirement will be met.
C404.6.1, C404.6.2 [PL3][1]	Automatic time switches installed to automatically switch off the recirculating hot-water system or heat trace.	☐Complies ☐Does Not ☐Not Observable ☐Not Applicable	Requirement will be met.
C404.6.3 [PL7][3]	Pumps that circulate water between a heater and storage tank have controls that limit operation from startup to <= 5 minutes after end of heating cycle.	☐Complies ☐Does Not ☐Not Observable ☐Not Applicable	Requirement will be met.
C404.6.1, C404.6.1.1 [PL8][3]	Demand recirculation water systems have controls that start the pump upon receiving a signal from the action of a user of a fixture or appliance and limits the temperature of the water entering the cold-water piping to 104°F.	☐Complies ☐Does Not ☐Not Observable ☐Not Applicable	Requirement will be met.

Additional Comments/Assumptions:

1 High Impact (Tier 1) | 2 Medium Impact (Tier 2) | 3 Low Impact (Tier 3)

Section # & Req.ID	Mechanical Rough-In Inspection	Complies?	Comments/Assumptions
C402.2.6 [ME41][3]	Thermally ineffective panel surfaces of sensible heating panels have insulation >= R-3.5.	☐Complies ☐Does Not ☐Not Observable ☐Not Applicable	Requirement will be met.
C403.12.3 [ME61][2]	HVAC piping insulation insulated in accordance with Table C403.11.3. Insulation exposed to weather is protected from damage and is provided with shielding from solar radiation.	☐Complies ☐Does Not ☐Not Observable ☐Not Applicable	
C403.8.1 [ME65][3]	HVAC fan systems at design conditions do not exceed allowable fan system motor nameplate hp or fan system bhp.	☐Complies ☐Does Not ☐Not Observable ☐Not Applicable	Requirement will be met. *See the Mechanical Systems list for values.*
C403.8.3 [ME117][2]	Fans have a fan energy index (FEI) >= 1.00. Variable volume fans will have an FEI >= 0.95.	☐Complies ☐Does Not ☐Not Observable ☐Not Applicable	Requirement will be met.
C403.8.3 [ME117][2]	Fans have a fan energy index (FEI) >= 1.00. Variable volume fans will have an FEI >= 0.95.	☐Complies ☐Does Not ☐Not Observable ☐Not Applicable	Requirement will be met.
C403.8.4 [ME142][2]	Motors for fans that are not less than 1/12 hp and less than 1 hp are electronically commutated motors or have a minimum motor efficiency of 70 percent. These motors have the means to adjust motor speed.	☐Complies ☐Does Not ☐Not Observable ☐Not Applicable	Requirement will be met.
C403.8.6 [ME143][2]	Each DX cooling system > 65 kBtu and chiller water/evaporative cooling system with fans > 1/4 hp are designed to vary the indoor fan airflow as a function of load and comply with detailed requirements of this section.	☐Complies ☐Does Not ☐Not Observable ☐Not Applicable	Requirement will be met.
C403.9 [ME144][2]	Large diameter fans where installed shall be tested and labeled in accordance with AMCA 230.	☐Complies ☐Does Not ☐Not Observable ☐Not Applicable	Requirement will be met.
C403.13.1 [ME71][2]	Systems that heat outside the building envelope are radiant heat systems controlled by an occupancy sensing device or timer switch.	☐Complies ☐Does Not ☐Not Observable ☐Not Applicable	
C403.3 [ME55][2]	HVAC equipment efficiency verified.	☐Complies ☐Does Not ☐Not Observable ☐Not Applicable	*See the Mechanical Systems list for values.*
C403.2.2 [ME59][1]	Natural or mechanical ventilation is provided in accordance with International Mechanical Code Chapter 4. Mechanical ventilation has capability to reduce outdoor air supply to minimum per IMC Chapter 4.	☐Complies ☐Does Not ☐Not Observable ☐Not Applicable	Requirement will be met.

1 High Impact (Tier 1) | 2 Medium Impact (Tier 2) | 3 Low Impact (Tier 3)

Section # & Req.ID	Mechanical Rough-In Inspection	Complies?	Comments/Assumptions
C403.7.1 [ME59][1]	Demand control ventilation provided for spaces >500 ft2 and >15 people/1000 ft2 occupant density and served by systems with air side economizer, auto modulating outside air damper control, or design airflow >3,000 cfm.	☐Complies ☐Does Not ☐Not Observable ☐Not Applicable	Requirement will be met.
C403.7.2 [ME115][3]	Enclosed parking garage ventilation has automatic contaminant detection and capacity to stage or modulate fans to 50% or less of design capacity.	☐Complies ☐Does Not ☐Not Observable ☐Not Applicable	Requirement will be met.
C403.7.6 [ME141][3]	HVAC systems serving guestrooms in Group R-1 buildings with > 50 guestrooms: Each guestroom is provided with controls that automatically manage temperature setpoint and ventilation (see sections C403.7.6.1 and C403.7.6.2).	☐Complies ☐Does Not ☐Not Observable ☐Not Applicable	**Exception:** Requirement does not apply.
C403.7.4 [ME57][1]	Exhaust air energy recovery on systems meeting Table C403.7.4(1) and C403.7.4(2).	☐Complies ☐Does Not ☐Not Observable ☐Not Applicable	Requirement will be met.
C403.7.5 [ME116][3]	Kitchen exhaust systems comply with replacement air and conditioned supply air limitations, and satisfy hood rating requirements and maximum exhaust rate criteria.	☐Complies ☐Does Not ☐Not Observable ☐Not Applicable	**Exception:** Requirement does not apply.
C403.12.1, C403.12.2 [ME60][2]	HVAC ducts and plenums insulated in accordance with C403.11.1 and constructed in accordance with C403.11.2, verification may need to occur during Foundation Inspection.	☐Complies ☐Does Not ☐Not Observable ☐Not Applicable	
C403.4.1.4 [ME63][2]	Heating for vestibules and air curtains with integral heating include automatic controls that shut off the heating system when outdoor air temperatures > 45F. Vestibule heating and cooling systems controlled by a thermostat in the vestibule with heating setpoint <= 60F and cooling setpoint >= 80F.	☐Complies ☐Does Not ☐Not Observable ☐Not Applicable	Requirement will be met.
C403.3.3 [ME35][1]	Hot gas bypass limited to: <=240 kBtu/h – 50% >240 kBtu/h – 25%	☐Complies ☐Does Not ☐Not Observable ☐Not Applicable	Requirement will be met.
C408.2.2.1 [ME53][3]	Air outlets and zone terminal devices have means for air balancing.	☐Complies ☐Does Not ☐Not Observable ☐Not Applicable	Requirement will be met.
C403.11.3, C403.11.3.1, C403.11.3.2 [ME123][3]	Refrigerated display cases, walk-in coolers or walk-in freezers served by remote compressors and remote condensers not located in a condensing unit, have fan-powered condensers that comply with Sections C403.11.3.1 and refrigeration compressor systems that comply with C403.11.3.2..	☐Complies ☐Does Not ☐Not Observable ☐Not Applicable	**Exception:** Requirement does not apply.

Additional Comments/Assumptions:

1 High Impact (Tier 1) | 2 Medium Impact (Tier 2) | 3 Low Impact (Tier 3)

Section # & Req.ID	Rough-In Electrical Inspection	Complies?	Comments/Assumptions
C405.2.3.1 [EL22][1]	Spaces required to have light-reduction controls have a manual control that allows the occupant to reduce the connected lighting load in a reasonably uniform illumination pattern >= 50 percent.	☐Complies ☐Does Not ☐Not Observable ☐Not Applicable	
C405.2.1, C405.2.1.1 [EL18][1]	Occupancy sensors installed in classrooms/lecture/training rooms, conference/meeting/multipurpose rooms, copy/print rooms, lounges/breakrooms, enclosed offices, open plan office areas, restrooms, storage rooms, locker rooms, corridors, warehouse storage areas, and other spaces <= 300 sqft that are enclosed by floor-to-ceiling height partitions. Reference section language C405.2.1.2 for control function in warehouses and section C405.2.1.3 for open plan office spaces.	☐Complies ☐Does Not ☐Not Observable ☐Not Applicable	
C405.2.1.2 [EL19][1]	Occupancy sensors control function in warehouses: In warehouses, the lighting in aisleways and open areas is controlled with occupant sensors that automatically reduce lighting power by 50% or more within 20 minutes of when the areas are unoccupied. The occupant sensors control lighting in each aisleway independently and do not control lighting beyond the aisleway being controlled by the sensor. Lights not turned off by occupant sensors is done so by time-switch.	☐Complies ☐Does Not ☐Not Observable ☐Not Applicable	
C405.2.1.3 [EL20][1]	Occupant sensor control function in open plan office areas: Occupant sensor controls in open office spaces >= 300 sq.ft. have controls 1) configured so that general lighting can be controlled separately in control zones with floor areas <= 600 sq.ft. within the space, 2) general lighting in each zone permitted to turn on upon occupancy in control zone, 3) automatically turn off general lighting in all control zones within 20 minutes after all occupants have left the space, 4) are configured so that general lighting power in each control zone is reduced by >= 80% of the full zone general lighting power within 20 minutes of all occupants leaving that control zone.	☐Complies ☐Does Not ☐Not Observable ☐Not Applicable	
C405.2.2, C405.2.2.1 [EL21][2]	Each area not served by occupancy sensors (per C405.2.1.1) have time-switch controls and functions detailed in sections C405.2.2.1.	☐Complies ☐Does Not ☐Not Observable ☐Not Applicable	

1 High Impact (Tier 1) | 2 Medium Impact (Tier 2) | 3 Low Impact (Tier 3)

Section # & Req.ID	Rough-In Electrical Inspection	Complies?	Comments/Assumptions
C405.2.4, C405.2.4.1, C405.2.4.2 [EL23][2]	Daylight zones provided with individual controls that control the lights independent of general area lighting. See code section C405.2.3 Daylight-responsive controls for applicable spaces, C405.2.3.1 Daylight responsive control function and section C405.2.3.2 Sidelit zone.	☐Complies ☐Does Not ☐Not Observable ☐Not Applicable	
C405.2.5 [EL27][1]	Additional interior lighting power allowed for special functions per the approved lighting plans and is automatically controlled and separated from general lighting.	☐Complies ☐Does Not ☐Not Observable ☐Not Applicable	
C405.2.7 [EL28][1]	Automatic lighting controls for exterior lighting installed. Controls will be daylight controlled, set based on business operation time-of-day, or reduce connected lighting > 30%.	☐Complies ☐Does Not ☐Not Observable ☐Not Applicable	
C405.7 [EL26][2]	Low-voltage dry-type distribution electric transformers meet the minimum efficiency requirements of Table C405.6.	☐Complies ☐Does Not ☐Not Observable ☐Not Applicable	
C405.8 [EL27][2]	Electric motors meet the minimum efficiency requirements of Tables C405.7(1) through C405.7(4). Efficiency verified through certification under an approved certification program or the equipment efficiency ratings shall be provided by motor manufacturer (where certification programs do not exist).	☐Complies ☐Does Not ☐Not Observable ☐Not Applicable	
C405.9.1, C405.9.2 [EL28][2]	Escalators and moving walks comply with ASME A17.1/CSA B44 and have automatic controls configured to reduce speed to the minimum permitted speed in accordance with ASME A17.1/CSA B44 or applicable local code when not conveying passengers.	☐Complies ☐Does Not ☐Not Observable ☐Not Applicable	
C405.10 [EL29][2]	Total voltage drop across the combination of feeders and branch circuits <= 5%.	☐Complies ☐Does Not ☐Not Observable ☐Not Applicable	
C405.1.1 [EL30][2]	At least 90% of dwelling unit permanently installed lighting shall have lamp efficacy >= 65 lm/W or luminaires with efficacy >= 45 lm/W or comply with C405.2.4 or C405.3.	☐Complies ☐Does Not ☐Not Observable ☐Not Applicable	
C405.11, C405.11.1 [EL31][2]	50% of 15/20 amp receptacles installed in enclosed offices, conference rooms, copy rooms, break rooms, classrooms and workstations and > 25% of branch circuit feeders for modular furniture will have automatic receptacle control in accordance with C405.11.1.	☐Complies ☐Does Not ☐Not Observable ☐Not Applicable	

Additional Comments/Assumptions:

1 High Impact (Tier 1) | 2 Medium Impact (Tier 2) | 3 Low Impact (Tier 3)

Section # & Req.ID	Insulation Inspection	Complies?	Comments/Assumptions
C303.1 [IN3][1]	Roof insulation installed per manufacturer's instructions and is labeled with R-value or insulation certificate providing R-value and other relevant data. Blown or poured loose-fill insulation is installed only where the roof slope is <=3 in 12.	☐Complies ☐Does Not ☐Not Observable ☐Not Applicable	
C402.2.1 [IN20][1]	Roof assembly meets minimal thermal resistance installed between roof framing or in a continuous fashion on the roof assembly as stipulated in Table C402.1.3. Requirements for above deck insulation, minimum thickness, suspended ceilings, staggered joints and skylight curbs will be met.	☐Complies ☐Does Not ☐Not Observable ☐Not Applicable	
C303.2 [IN7][1]	Above-grade wall insulation installed per manufacturer's instructions.	☐Complies ☐Does Not ☐Not Observable ☐Not Applicable	
C105 [IN6][1]	Installed above-grade wall insulation type and R-value consistent with insulation specifications reported in plans and COMcheck reports.	☐Complies ☐Does Not ☐Not Observable ☐Not Applicable	*See the Envelope Assemblies table for values.*
C402.2.3 [IN8][2]	Installed floor insulation type and R-value consistent with insulation specifications reported in plans and COMcheck reports.	☐Complies ☐Does Not ☐Not Observable ☐Not Applicable	*See the Envelope Assemblies table for values.*
C402.2.6 [IN18][3]	Radiant panels and associated components, designed for heat transfer from the panel surfaces to the occupants or indoor space are insulated with a minimum of R-3.5.	☐Complies ☐Does Not ☐Not Observable ☐Not Applicable	
C402.3 [IN5][3]	High-albedo roofs satisfy one of the following: 3-year-aged solar reflectance >= 0.55 and thermal emittance >= 0.75 or 3-year-aged solar reflectance index >= 64.0.	☐Complies ☐Does Not ☐Not Observable ☐Not Applicable	
C105 [IN2][1]	Installed roof insulation type and R-value consistent with insulation specifications reported in plans and COMcheck reports. For some ceiling systems, verification may need to occur during Framing Inspection.	☐Complies ☐Does Not ☐Not Observable ☐Not Applicable	*See the Envelope Assemblies table for values.*
C402.5.1.1 [IN1][1]	All sources of air leakage in the building thermal envelope are sealed, caulked, gasketed, weather stripped or wrapped with moisture vapor-permeable wrapping material to minimize air leakage.	☐Complies ☐Does Not ☐Not Observable ☐Not Applicable	

Additional Comments/Assumptions:

1 High Impact (Tier 1) | 2 Medium Impact (Tier 2) | 3 Low Impact (Tier 3)

Section # & Req.ID	Final Inspection	Complies?	Comments/Assumptions
C303.3, C408.2.5.2 [FI17][3]	Furnished O&M instructions for systems and equipment to the building owner or designated representative.	☐Complies ☐Does Not ☐Not Observable ☐Not Applicable	
C303.3, C408.2.5.3 [FI8][3]	Furnished O&M manuals for HVAC systems within 90 days of system acceptance.	☐Complies ☐Does Not ☐Not Observable ☐Not Applicable	Requirement will be met.
C401.3 [FI58][1]	A thermal envelope certificate will be supplied and completed by an approved third party.	☐Complies ☐Does Not ☐Not Observable ☐Not Applicable	
C402.5.10 [FI26][3]	Recessed luminaires in thermal envelope to limit infiltration and be IC rated and labeled. Seal between interior finish and luminaire housing.	☐Complies ☐Does Not ☐Not Observable ☐Not Applicable	
C402.5.8 [FI37][1]	Weatherseals installed on all loading dock cargo door openings and provide direct contact along the top and sides of vehicles parked in the doorway.	☐Complies ☐Does Not ☐Not Observable ☐Not Applicable	
C403.1.1 [FI50][3]	HVAC systems and equipment design loads calculated in accordance with ANSI/ASHRAE/ACCA Standard 183 or by an approved equivalent computational procedure	☐Complies ☐Does Not ☐Not Observable ☐Not Applicable	
C403.3.1 [FI27][3]	HVAC systems and equipment capacity does not exceed calculated loads.	☐Complies ☐Does Not ☐Not Observable ☐Not Applicable	Requirement will be met.
C403.4.1 [FI47][3]	Heating and cooling to each zone is controlled by a thermostat control. Minimum one humidity control device per installed humidification/dehumidification system.	☐Complies ☐Does Not ☐Not Observable ☐Not Applicable	Requirement will be met.
C403.4.1.2 [FI38][3]	Thermostatic controls have a 5 °F deadband.	☐Complies ☐Does Not ☐Not Observable ☐Not Applicable	Requirement will be met.
C403.4.1.3 [FI20][3]	Temperature controls have setpoint overlap restrictions.	☐Complies ☐Does Not ☐Not Observable ☐Not Applicable	Requirement will be met.
C403.4.2 [FI39][3]	Each zone equipped with setback controls using automatic time clock or programmable control system.	☐Complies ☐Does Not ☐Not Observable ☐Not Applicable	Requirement will be met.
C403.4.2.1, C403.4.2.2 [FI40][3]	Automatic Controls: Setback to 55°F (heat) and 85°F (cool); 7-day clock, 2-hour occupant override, 10-hour backup	☐Complies ☐Does Not ☐Not Observable ☐Not Applicable	Requirement will be met.

1 High Impact (Tier 1) | 2 Medium Impact (Tier 2) | 3 Low Impact (Tier 3)

Section # & Req.ID	Final Inspection	Complies?	Comments/Assumptions
C403.4.2.3 [FI41][3]	Systems include optimum start controls.	☐Complies ☐Does Not ☐Not Observable ☐Not Applicable	Requirement will be met.
C404.3 [FI11][3]	Heat traps installed on supply and discharge piping of non-circulating systems.	☐Complies ☐Does Not ☐Not Observable ☐Not Applicable	Requirement will be met.
C404.4 [FI25][2]	All piping insulated in accordance with section details and Table C403.12.3.	☐Complies ☐Does Not ☐Not Observable ☐Not Applicable	Requirement will be met.
C404.6.1 [FI12][3]	Controls are installed that limit the operation of a recirculation pump installed to maintain temperature of a storage tank. System return pipe is a dedicated return pipe or a cold water supply pipe.	☐Complies ☐Does Not ☐Not Observable ☐Not Applicable	Requirement will be met.
C405.5.1 [FI19][1]	Exterior lighting power is consistent with what is shown on the approved lighting plans, demonstrating proposed watts are less than or equal to allowed watts.	☐Complies ☐Does Not ☐Not Observable ☐Not Applicable	*See the Exterior Lighting fixture schedule for values.*
C408.1.1 [FI57][1]	Building operations and maintenance documents will be provided to the owner. Documents will cover manufacturers' information, specifications, programming procedures and means of illustrating to owner how building, equipment and systems are intended to be installed, maintained, and operated.	☐Complies ☐Does Not ☐Not Observable ☐Not Applicable	
C408.2.1 [FI28][1]	Commissioning plan developed by registered design professional or approved agency.	☐Complies ☐Does Not ☐Not Observable ☐Not Applicable	Requirement will be met.
C408.2.3.1 [FI31][1]	HVAC equipment, systems and system-to-system relationships have been tested to ensure proper operation.	☐Complies ☐Does Not ☐Not Observable ☐Not Applicable	Requirement will be met.
C408.2.3.2 [FI10][1]	HVAC and service water heating control systems have been tested to ensure proper operation, calibration and adjustment of controls.	☐Complies ☐Does Not ☐Not Observable ☐Not Applicable	Requirement will be met.
C408.2.4 [FI29][1]	Preliminary commissioning report completed and certified by registered design professional or approved agency.	☐Complies ☐Does Not ☐Not Observable ☐Not Applicable	Requirement will be met.
C408.2.5 [FI7][3]	Furnished HVAC as-built drawings submitted within 90 days of system acceptance.	☐Complies ☐Does Not ☐Not Observable ☐Not Applicable	Requirement will be met.
C408.2.5 [FI16][3]	Furnished as-built drawings for electric power systems within 90 days of system acceptance.	☐Complies ☐Does Not ☐Not Observable ☐Not Applicable	

1 High Impact (Tier 1) | 2 Medium Impact (Tier 2) | 3 Low Impact (Tier 3)

Section # & Req.ID	Final Inspection	Complies?	Comments/Assumptions
C408.2.5.1 [FI43][1]	An air and/or hydronic system balancing report is provided for HVAC systems.	☐Complies ☐Does Not ☐Not Observable ☐Not Applicable	Requirement will be met.
C408.2.5.2 [FI30][1]	Final commissioning report due to building owner within 90 days of receipt of certificate of occupancy.	☐Complies ☐Does Not ☐Not Observable ☐Not Applicable	Requirement will be met.
C408.3 [FI33][1]	Lighting systems have been tested to ensure proper calibration, adjustment, programming, and operation.	☐Complies ☐Does Not ☐Not Observable ☐Not Applicable	

Additional Comments/Assumptions:

1 High Impact (Tier 1) | 2 Medium Impact (Tier 2) | 3 Low Impact (Tier 3)

Pinnacle
ENGINEERING, INC
Engineering & Design Consultants
2031 Shady Crest Dr
Birmingham, AL 35216
(205) 733-6912 FAX: (205) 733-6913
Job No.26152

AHO ARCHITECTS, LLC
www.ahoarch.com

STATE OF TEXAS
JAMES HOGLAND, JR.
93348
PROFESSIONAL ENGINEER
8/12/26

Express Oil Change & Tire Engineers
Single Building / Right Hand Oil Change / Rear Enter / Side Tire Storage
Cross Roads, Texas (Aubrey)

FINAL

No.	Description	Date
IFP-0	Issued for Permit	06/30/26
IFB-0	Iss. fo Bid/AHJ Rev.	08/12/2026

© 2026 Aho Architects, LLC. All Rights Reserved.

Mechanical Comcheck

Project number	26013
Date	06/30/2026
Drawn by	CA
Checked by	JB

M0.04

Scale 6" = 1'-0"

9/1/2026 1:09:24 PM

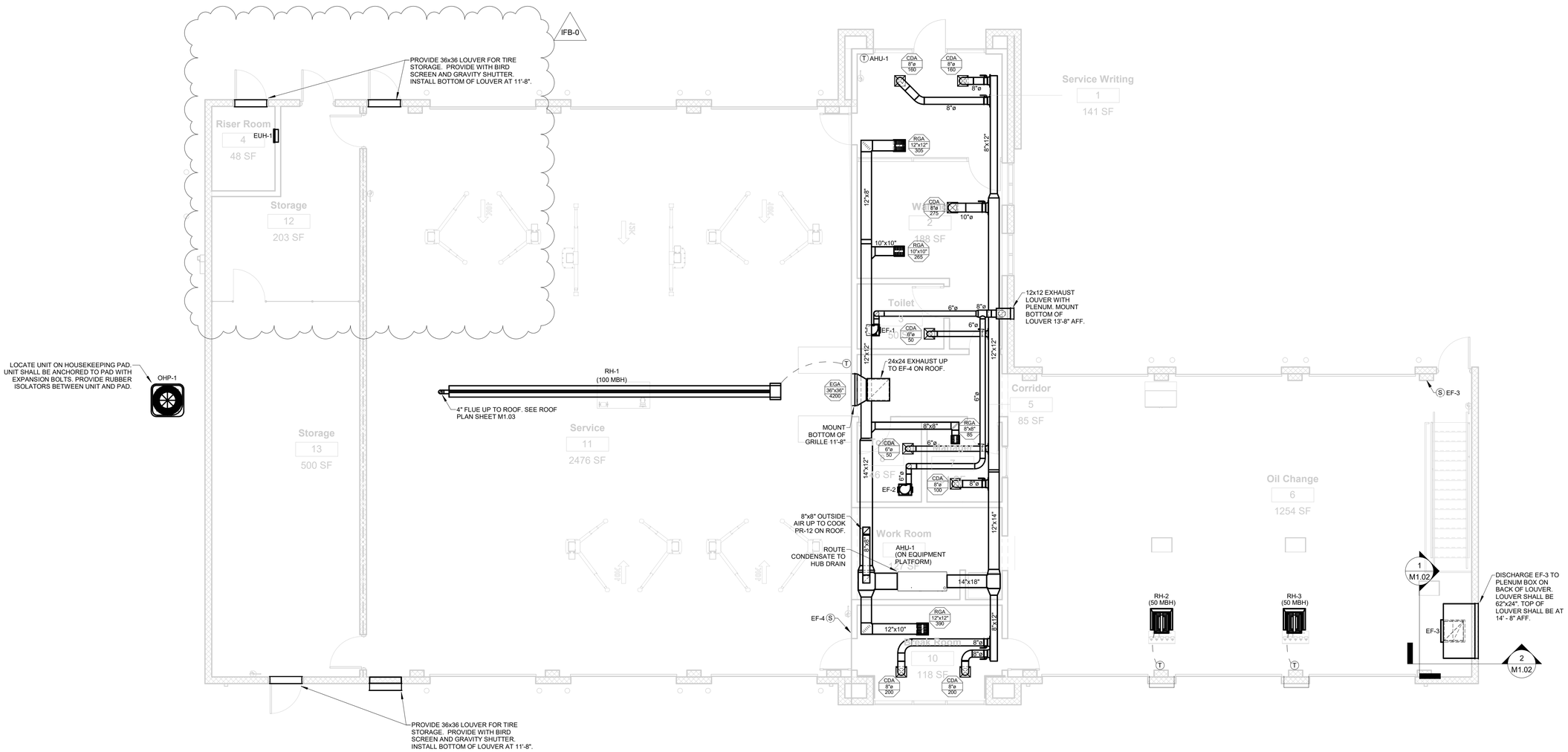

NORTH

MAIN FLOOR PLAN
MECHANICAL
3/16" = 1'-0"

GENERAL NOTES:

1. VERIFY EXISTING CONDITIONS IN FIELD PRIOR TO BEGINNING WORK.
2. SPACE ABOVE CEILING IS LIMITED. CAREFUL COORDINATION WITH LIGHTING, ELECTRICAL, PLUMBING, STRUCTURAL, AND ARCHITECTURAL WORK IS CRITICAL TO DUCTWORK INSTALLATION.
3. PROVIDE NECESSARY OFFSETS IN PIPING, ELECTRICAL CONDUIT, AND DUCTWORK AS REQUIRED TO ACCOMMODATE NEW WORK. DRAWINGS ARE DIAGRAMMATIC AND DO NOT SHOW ALL DETAILS NOR CHANGES IN DUCTWORK ELEVATIONS NECESSARY FOR COMPLETE INSTALLATION.
4. COORDINATE CEILING AIR DEVICE LOCATIONS WITH LIGHTING PLAN AND ARCHITECT'S REFLECTED CEILING PLAN.
5. DUCTWORK SHALL BE RUN TIGHT TO STRUCTURE. AVOID CROSSING OVER LIGHTS AND OTHER DUCTS DUE TO TIGHT CLEARANCES.
6. LOUVERS SHALL BE RUSKIN ELF6375DX OR APPROVED EQUAL. PROVIDE UNIT WITH BIRDSCREEN AND MILL ALUMINUM FINISH. COORDINATE EXACT HEIGHT AND COLOR OF LOUVER WITH ARCHITECT PRIOR TO ORDERING.
7. MOUNT TEMPERATURE CONTROLS 48" ABOVE FINISHED FLOOR. COORDINATE EXACT LOCATION WITH ARCHITECT.
8. SPILL CONDENSATE FROM AHUS INTO NEAREST FLOOR DRAIN.
9. PROVIDE ENGRAVED PLASTIC LABEL AT TERMINATION OF EACH AUXILIARY CONDENSATE DRAIN LINE READING AS FOLLOWS:
   "AHU-### AUXILIARY DRAIN LINE."
   "NOTIFY MAINTENANCE PERSONNEL WHEN WATER IS FLOWING"
10. CONNECT CONDENSATE DRAIN PIPING TO AIR HANDLING UNITS IN ACCORDANCE WITH DETAILS.
11. OUTSIDE AIR VENTILATION INTAKES FOR OIL CHANGE AND SERVICE AREAS WILL BE PROVIDED BY INTAKE LOUVERS OR ROLL UP DOORS.

Pinnacle ENGINEERING, INC.
Engineering & Design Consultants
2031 Shady Crest Dr
Birmingham, AL 35216
(205) 733-6912 FAX: (205) 733-6913
Job No.26152

AHO ARCHITECTS, LLC
www.ahoarch.com

STATE OF ALABAMA
JAMES BRYAN HOLLIS
93346
8/12/26

Express Oil Change & Tire Engineers

Single Building / Right Hand Oil Change / Rear Enter / Side Tire Storage

Cross Roads, Texas (Aubrey)

FINAL

No.	Description	Date
IFP-0	Issued for Permit	06/30/26
IFB-0	Iss. fo Bid/AHJ Rev.	08/12/2026

© 2026 Aho Architects, LLC.
All Rights Reserved.

Mechanical Floor Plan

Project number	26013
Date	06/30/2026
Drawn by	CA
Checked by	JB

M1.01

Scale As indicated

9/1/2026 1:09:24 PM

Pinnacle
ENGINEERING, INC.
Engineering & Design Consultants
2031 Shady Crest Dr
Birmingham, AL 35216
(205) 733-6912 FAX: (205) 733-6913
Job No.26152

AHO ARCHITECTS, LLC
www.ahoarch.com

STATE OF ALABAMA
JAMES M. ZYLKA
Birmingham
Alabama
093485
8/12/26

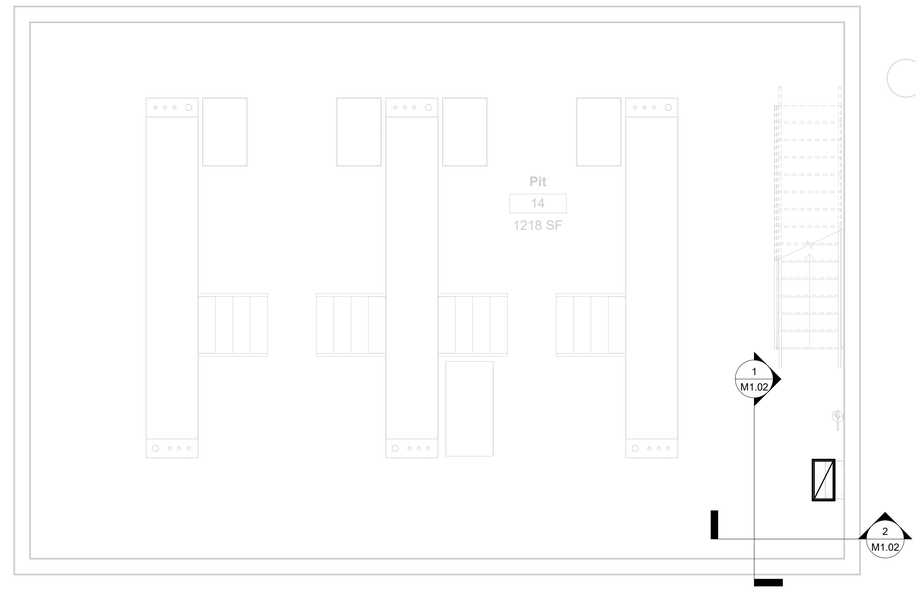

PIT FLOOR PLAN
MECHANICAL
NORTH 1/4" = 1'-0"

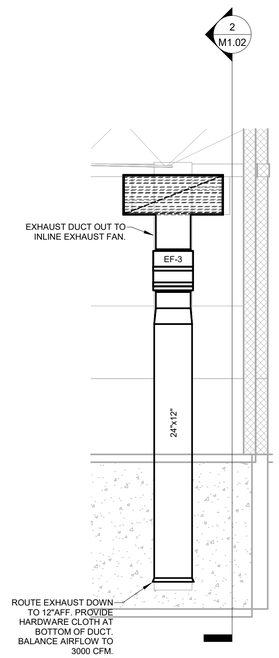

1 M1.02 Pit Exhaust Elevation
1/4" = 1'-0"

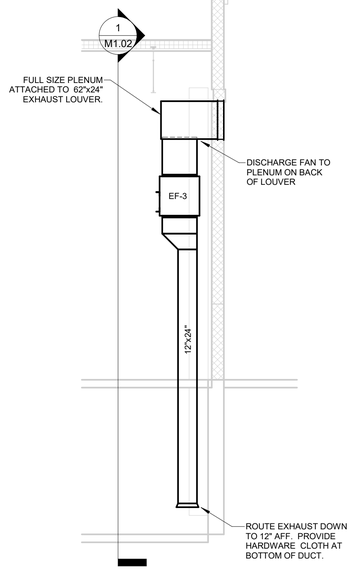

2 M1.02 Section Through Pit Exhaust
1/4" = 1'-0"

GENERAL NOTES:

1. VERIFY EXISTING CONDITIONS IN FIELD PRIOR TO BEGINNING WORK.
2. SPACE ABOVE CEILING IS LIMITED. CAREFUL COORDINATION WITH LIGHTING, ELECTRICAL, PLUMBING, STRUCTURAL, AND ARCHITECTURAL WORK IS CRITICAL TO DUCTWORK INSTALLATION.
3. PROVIDE NECESSARY OFFSETS IN PIPING, ELECTRICAL CONDUIT, AND DUCTWORK AS REQUIRED TO ACCOMMODATE NEW WORK. DRAWINGS ARE DIAGRAMMATIC AND DO NOT SHOW ALL DETAILS NOR CHANGES IN DUCTWORK ELEVATIONS NECESSARY FOR COMPLETE INSTALLATION.
4. COORDINATE CEILING AIR DEVICE LOCATIONS WITH LIGHTING PLAN AND ARCHITECT'S REFLECTED CEILING PLAN.
5. DUCTWORK SHALL BE RUN TIGHT TO STRUCTURE. AVOID CROSSING OVER LIGHTS AND OTHER DUCTS DUE TO TIGHT CLEARANCES.
6. LOUVERS SHALL BE RUSKIN ELF6375DX OR APPROVED EQUAL. PROVIDE UNIT WITH BIRDSCREEN AND MILL ALUMINUM FINISH. COORDINATE EXACT HEIGHT AND COLOR OF LOUVER WITH ARCHITECT PRIOR TO ORDERING.
7. MOUNT TEMPERATURE CONTROLS 48" ABOVE FINISHED FLOOR. COORDINATE EXACT LOCATION WITH ARCHITECT.
8. SPILL CONDENSATE FROM AHUS INTO NEAREST FLOOR DRAIN.
9. PROVIDE ENGRAVED PLASTIC LABEL AT TERMINATION OF EACH AUXILIARY CONDENSATE DRAIN LINE READING AS FOLLOWS:
   "AHU-### AUXILIARY DRAIN LINE "
   "NOTIFY MAINTENANCE PERSONNEL WHEN WATER IS FLOWING"
10. CONNECT CONDENSATE DRAIN PIPING TO AHU IN ACCORDANCE WITH DETAILS.

Express Oil Change & Tire Engineers

Single Building / Right Hand Oil Change / Rear Enter / Side Tire Storage

Cross Roads, Texas (Aubrey)

FINAL

No.	Description	Date
IFP-0	Issued for Permit	06/30/26
IFB-0	Iss. fo Bid/AHJ Rev.	08/12/2026

© 2026 Aho Architects, LLC.
All Rights Reserved.

Partial Mechanical Floor Plans - Pit and Platform

Project number	26013
Date	06/30/2026
Drawn by	CA
Checked by	JB

M1.02

Scale As indicated

9/1/2026 1:09:25 PM

Pinnacle
ENGINEERING, INC.
Engineering & Design Consultants
2031 Shady Crest Dr
Birmingham, AL 35216
(205) 733-6912 FAX: (205) 733-6913
Job No.26152

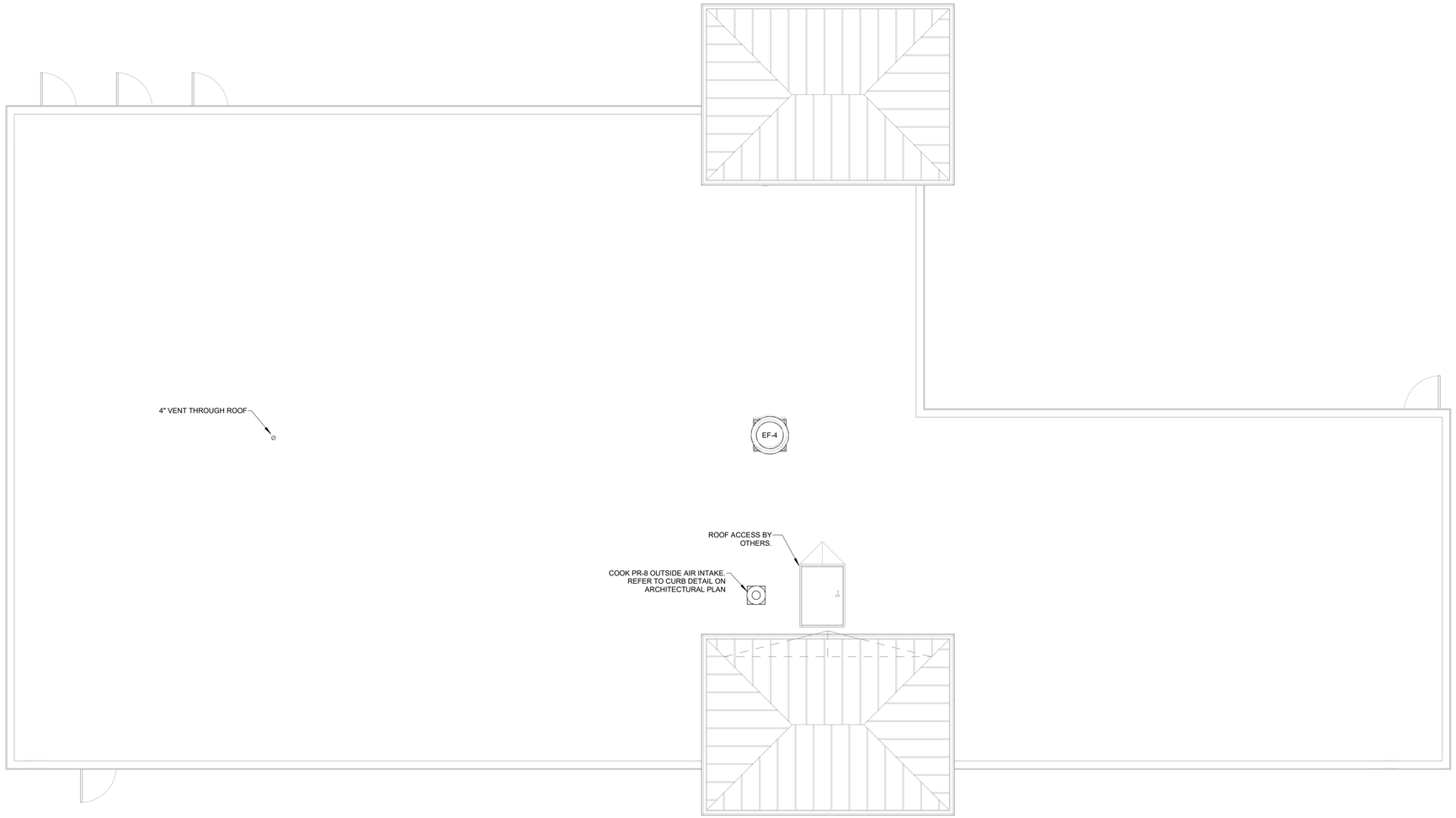

MECHANICAL ROOF PLAN
3/16" = 1'-0"

NORTH

GENERAL NOTES:

1. VERIFY EXISTING CONDITIONS IN FIELD PRIOR TO BEGINNING WORK.

AHO ARCHITECTS, LLC
www.ahoarch.com

STATE OF ALABAMA
JAMES BRYAN HOLLIS
Birmingham
Alabama
03348
8/12/26

Express Oil Change & Tire Engineers

Single Building / Right Hand Oil Change / Rear Enter / Side Tire Storage

Cross Roads, Texas (Aubrey)

FINAL

No.	Description	Date
IFP-0	Issued for Permit	06/30/26
IFB-0	Iss. fo Bid/AHJ Rev.	08/12/2026

© 2026 Aho Architects, LLC.
All Rights Reserved.

Mechanical Roof Plan

Project number	26013
Date	06/30/2026
Drawn by	CA
Checked by	JB

M1.03

Scale	As indicated

9/1/2026 1:09:25 PM

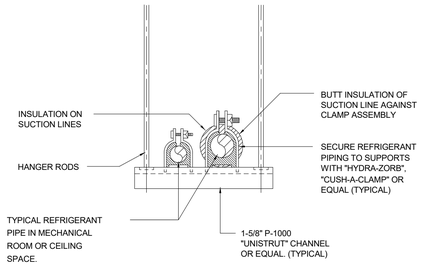

7 / M2.01 REFRIGERANT PIPING SUPPORT DETAIL
TYPICAL FOR PIPING SUSPENDED FROM STRUCTURE
NO SCALE

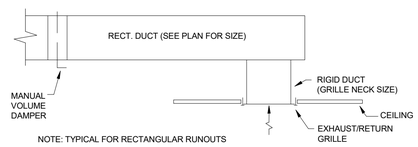

8 / M2.01 TYPICAL RETURN AND EXHAUST RUN-OUT DETAIL
NO SCALE

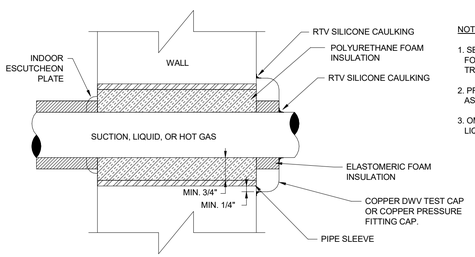

NOTES:

1. SEAL OPENING WITH POLYURETHANE FOAM. EQUAL TO VERSHFOAM TRIM OFF EXCESS FOAM.
2. PROVIDE INTERMEDIATE SUPPORTS AS REQUIRED.
3. OMIT ELASTOMERIC INSULATION ON LIQUID LINE.

9 / M2.01 REFRIGERANT LINE - WALL PENETRATION DETAIL
NO SCALE

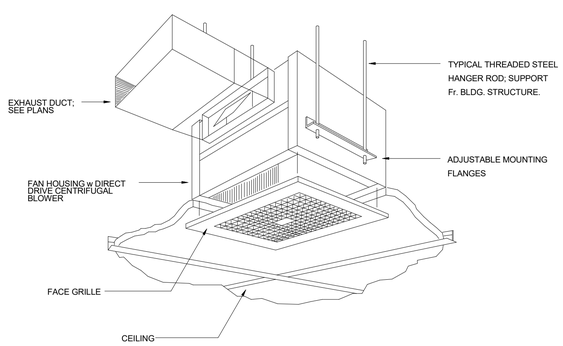

10 / M2.01 EXHAUST FAN INSTALLATION DETAIL(CEILING)
NO SCALE

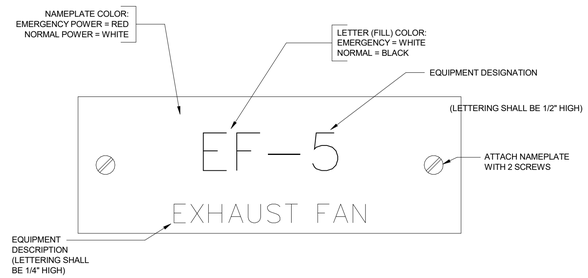

4 / M2.01 MECHANICAL EQUIPMENT NAMEPLATE DETAIL
NO SCALE

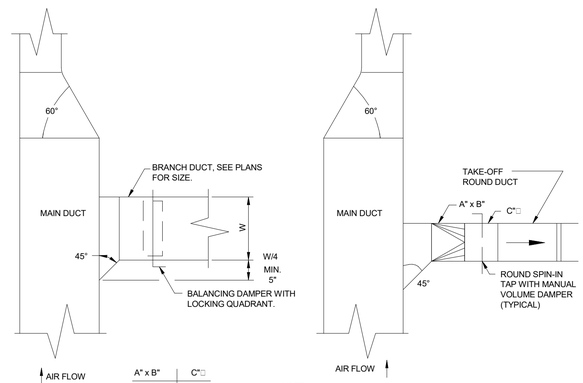

A" x B"	C"
12x8	10
12x10	12
16x10	14
22x10	16

NOTE:
USE 45° BRANCH FITTING WHEN MAIN SUPPLY DUCT DEPTH IS EQUAL TO OR SMALLER THAN TAKE-OFF ROUND DUCT SIZE.

5 / M2.01 TYPICAL DUCT TAKEOFF DETAIL
NO SCALE

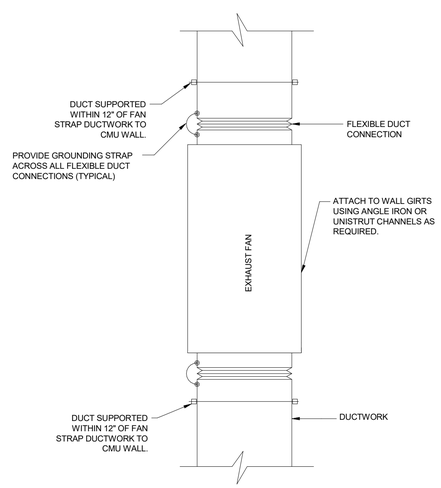

6 / M2.01 INLINE EXHAUST FAN DETAIL
NO SCALE

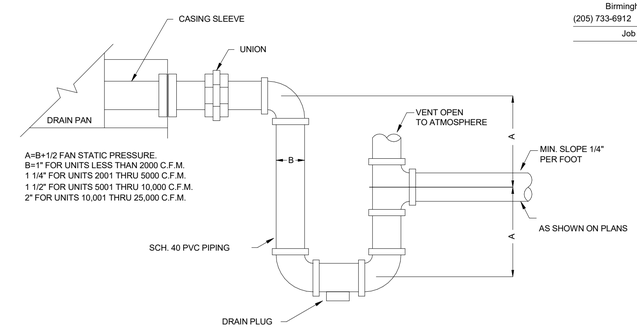

1 / M2.01 CONDENSATE DRAIN TRAP DETAIL
NO SCALE

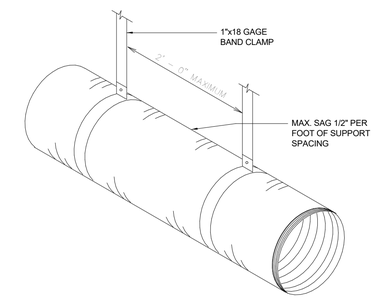

2 / M2.01 FLEXIBLE DUCT SUPPORT DETAIL
NO SCALE

NOTE:
PROVIDE WIND RESISTANCE CALCULATIONS AND PROJECT SPECIFIC INSTALLATION DETAILS WITH EQUIPMENT SUBMITTALS FOR ALL ROOF MOUNTED EQUIPMENT. SUBMITTAL SHALL INCLUDE DOCUMENTATION SIGNED BY A PROFESSIONAL ENGINEER THAT CONFIRMS COMPLIANCE WITH 2015 INTERNATIONAL BUILDING CODE REQUIREMENTS, SECTION 1609.

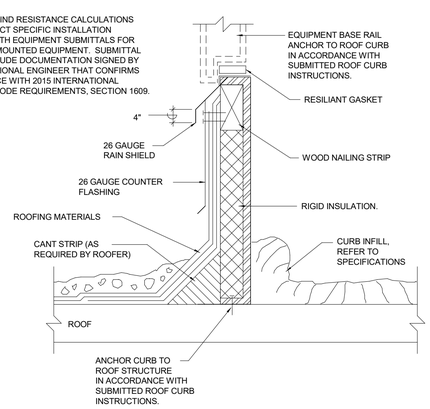

3 / M2.01 ROOF CURB DETAIL
REFER TO SCHEDULE FOR CURB TYPE REQUIRED
NO SCALE

Pinnacle ENGINEERING, INC.
Engineering & Design Consultants
2031 Shady Crest Dr
Birmingham, AL 35216
(205) 733-6912 FAX: (205) 733-6913
Job No.26152

AHO ARCHITECTS, LLC
www.ahoarch.com

STATE OF ALABAMA
JAMES BRYAN
93348
8/12/26

Express Oil Change & Tire Engineers

Single Building / Right Hand Oil Change / Rear Enter / Side Tire Storage

Cross Roads, Texas (Aubrey)

FINAL

No.	Description	Date
IFP-0	Issued for Permit	06/30/26
IFB-0	Iss. fo Bid/AHJ Rev.	08/12/2026

© 2026 Aho Architects, LLC. All Rights Reserved.

Mechanical Details

Project number	26013
Date	06/30/2026
Drawn by	CA
Checked by	JB

M2.01

Scale 12" = 1'-0"

9/1/2026 1:09:25 PM

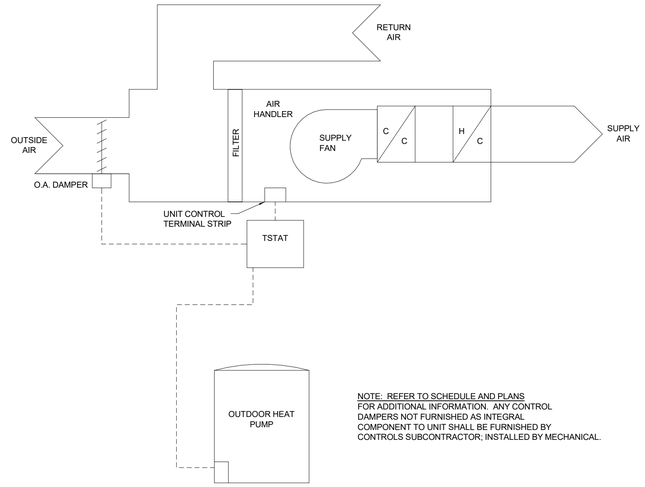

NOTE: REFER TO SCHEDULE AND PLANS FOR ADDITIONAL INFORMATION. ANY CONTROL DAMPERS NOT FURNISHED AS INTEGRAL COMPONENT TO UNIT SHALL BE FURNISHED BY CONTROLS SUBCONTRACTOR; INSTALLED BY MECHANICAL.

7 / M2.02 HVAC CONTROL DIAGRAM
TYPICAL
NO SCALE

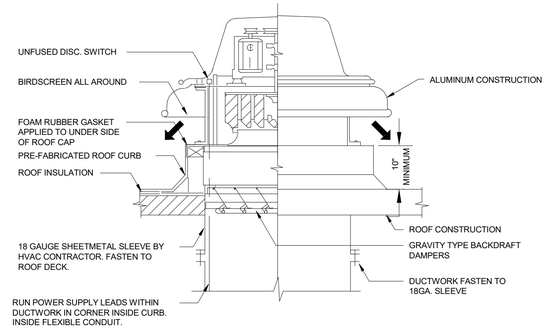

GENERAL NOTES:
1. SEE SPECIFICATIONS FOR CENTRIFUGAL TYPE ROOF EXHAUSTERS.
2. PREFABRICATED ROOF CURB INSULATION SHALL BE NOT LESS THAN 1 1/2 IN. THICK.

5 / M2.02 ROOF EXHAUST FAN DETAIL
NO SCALE

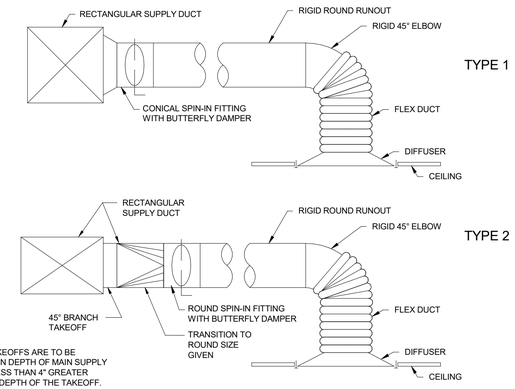

NOTE:
TYPE 2 TAKEOFFS ARE TO BE USED WHEN DEPTH OF MAIN SUPPLY DUCT IS LESS THAN 4" GREATER THAN THE DEPTH OF THE TAKEOFF.

1 / M2.02 TYPICAL DIFFUSER RUN-OUT DETAIL
NO SCALE

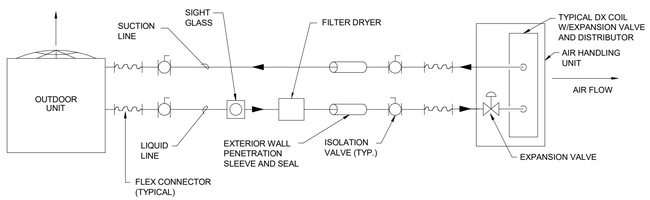

NOTE: SCHEMATIC IS TYPICAL FOR EACH REFRIGERANT CIRCUIT.

8 / M2.02 REFRIGERANT PIPING DETAIL
NO SCALE

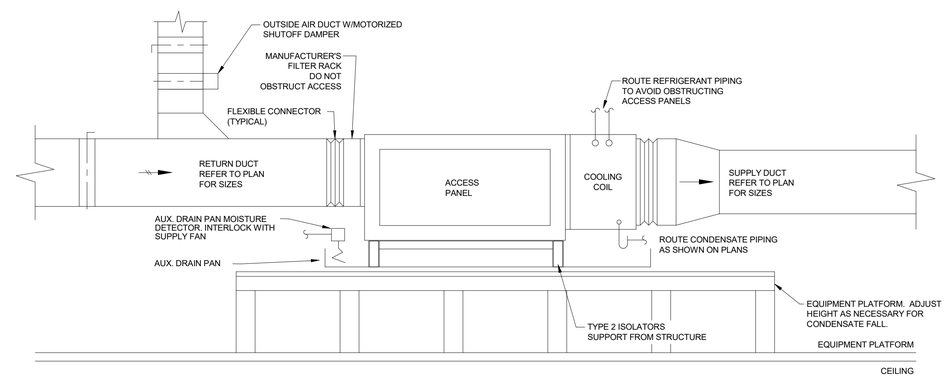

2 / M2.02 AIR HANDLING UNIT DETAIL
NO SCALE

DISTANCE TO COMBUSTIBLES				
MODEL NO.	SIDES	BACK	TOP	BELOW/ FRONT
DR 50	30	18	34	72

MAINTAIN PER MANUFACTURER'S INSTALLATION REQUIREMENTS. DISTANCES MEASURED ABOVE/BELOW RAY HEAD SURFACE.

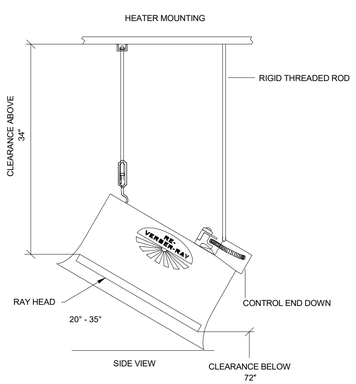

MANIFOLD CONTROL BOX MUST BE LOCATED TOWARDS THE LOWER END OF THE HEATER (TOWARDS THE FLOOR).

9 / M2.02 RADIANT HEATER MOUNTING DETAIL
NO SCALE

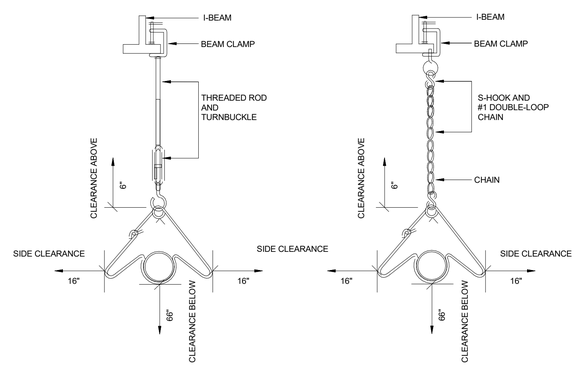

DISTANCE TO COMBUSTIBLES					
MODEL NO.	# OF SIDE SHIELDS	MOUNTING ANGLE	SIDES	TOP	BELOW
DX3L-30	2	0°	16"	6"	66"

*MAINTAIN PER MANUFACTURER'S INSTALLATION REQUIREMENTS. DISTANCES MEASURED ABOVE/BELOW RAY HEAD SURFACE.

6 / M2.02 RADIANT HEATER HANGER DETAIL
NO SCALE

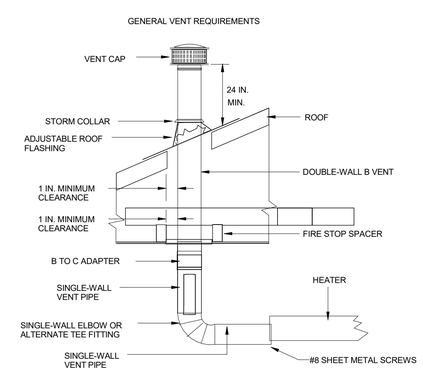

4 / M2.02 HEATER VENTING DETAIL
NO SCALE

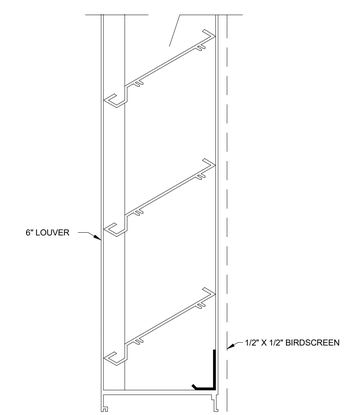

3 / M2.02 LOUVER DETAIL
NO SCALE

Pinnacle ENGINEERING, INC.
Engineering & Design Consultants
2031 Shady Crest Dr
Birmingham, AL 35216
(205) 733-6912 FAX: (205) 733-6913
Job No.26152

AHO ARCHITECTS, LLC
www.ahoarch.com

8/12/26

Express Oil Change & Tire Engineers
Single Building / Right Hand Oil Change / Rear Enter / Side Tire Storage
Cross Roads, Texas (Aubrey)

FINAL

No.	Description	Date
IFP-0	Issued for Permit	06/30/26
IFB-0	Iss. fo Bid/AHJ Rev.	08/12/2026

© 2026 Aho Architects, LLC. All Rights Reserved.

Mechanical Details

Project number	26013
Date	06/30/2026
Drawn by	CA
Checked by	JB

M2.02

Scale 12" = 1'-0"

9/1/2026 1:09:25 PM

PLUMBING LEGEND, SYMBOLS AND ABBREVIATIONS

	DOMESTIC COLD WATER
	DOMESTIC HOT WATER
	DOMESTIC HOT WATER RETURN
	SANITARY VENT
	SANITARY WASTE

	BALL VALVE
	VALVE IN VERTICAL
	CAP ON END OF PIPE
CO	CLEANOUT - FLOOR TYPE
CO	CLEANOUT - WALL TYPE
	P-TRAP
	PIPE TURNING DOWN
	PIPE TURNING UP
	TEE DOWN
	TEE UP
	TIE NEW INTO EXISTING
P-1	PLUMBING FIXTURE NUMBER
XX	RISER NUMBER
	WATER HAMMER ARRESTOR
	PLUG TYPE CLEANOUT
	BALANCING VALVE
	CHECK VALVE
	GATE VALVE
	REDUCED PRESSURE ZONE BFP
	THERMOSTATIC MIXING VALVE
	FLOOR SINK
	FLOOR DRAIN
	ROOF DRAIN/OVERFLOW DRAIN
XX	FOOD SERVICE EQUIPMENT

ABV	ABOVE
AFF	ABOVE FINISHED FLOOR
INV	INVERT
BFF	BELOW FINISHED FLOOR
CW	COLD WATER
DN	DOWN
EX	EXISTING
HW	HOT WATER
WS	WASTE STACK
VS	VENT STACK
AC	ABOVE CEILING
WHA	WATER HAMMER ARRESTOR
BFG	BELOW FINISHED GRADE
TMV	THERMOSTATIC MIXING VALVE
TP	TRAP PRIMER
DS	DOWNSPOUT
UG	UNDER GROUND

Pinnacle ENGINEERING, INC.
Engineering & Design Consultants
2031 Shady Crest Dr
Birmingham, AL 35216
(205) 733-6912 FAX: (205) 733-6913
Job No.26152

PLUMBING FIXTURE CONNECTION SCHEDULE

EQUIPMENT NO.	DESCRIPTION	HOT WATER	COLD WATER	WASTE	VENT	REMARKS
WC-1	WATER CLOSET, ADA COMPLIANT	--	1/2"	4"	2"	
EW-1	EYEWASH	1/2"	1/2"	2"	1-1/2"	PROVIDE WITH MIXING VALVE; 1)
EWC-1	ELECTRIC WATER COOLER	--	1/2"	2"	1-1/2"	WALL MOUNT ADA WITH BOTTLE FILLER
LAV-1	LAVATORY, ADA COMPLIANT	1/2"	1/2"	1-1/2"	1-1/2"	WALL MOUNTED, PROVIDE TRAP WRAP AND MIXING VALVE
SK-1	SERVICE SINK	1/2"	1/2"	2"	1-1/2"	ROUTE TO INTERCEPTOR
WH-1	WALL HYDRANT	--	1/2"	--	--	
FD-1	FLOOR DRAIN	--	--	2"	1-1/2"	PROVIDE TRAP GUARD

REMARKS:
1) SET SUPPLY WATER TEMPERATURE TO 90°F.

ELECTRIC WATER HEATER SCHEDULE

EQUIPMENT NO.	MANUFACTURER AND MODEL NO.	SERVICE	EFF (%)	ENTERING WATER TEMP (°F)	LEAVING WATER TEMP (°F)	RECOVERY RATE (GPH)	STORAGE CAPACITY (GAL)	TANK DIMENSIONS		ELECTRICAL			REMARKS
								HEIGHT (INCHES)	DIAMETER (INCHES)	HEATING ELEMENTS		VOLTS/PH/HZ	
										WATTAGE	QNTY		
EWH-1	A.O. SMITH ECS-30X	BATHROOMS/EYEWASH	--	60	120	21	30	3'-3"	1'-8"	4.5 KW	1	240 / 1 / 60	

RECIRCULATION PUMP SCHEDULE

EQUIPMENT NO.	MANUFACTURER/ MODEL NO.	SERVICE	TYPE	FLOW (GPM)	HEAD (FT.)	RPM	ELECTRICAL			REMARKS
							HP	DISCONNECT	VOLTS/PH./HZ.	
REC-1	TACO 2400-10S	HOT WATER RETURN	INLINE	2	10	3450	1/10	BY DIV. 16	120/1/60	1)

REMARKS:
1) PROVIDE AQUASTAT AND TIMER. INSTALL IN ACCORDANCE WITH IECC REQUIREMENTS.
2) PUMP SHALL BE STAINLESS STEEL BODY FOR DOMESTIC USE.

GREASE INTERCEPTOR SCHEDULE

EQUIPMENT NO.	MANUFACTURER/ MODEL NO.	FLOW RATE (GPM)	LIQUID HOLDING CAPACITY (GAL)	CONNECTION SIZES		UNIT DIMENSIONS			REMARKS
				INLET (IN.)	OUTLET (IN.)	LENGTH (IN.)	WIDTH (IN.)	DEPTH (IN.)	
OS-1	STRIEM OS-25	25	21	3	3	2'-3"	1'-11"	1'-3"	1)

REMARKS:
1) PROVIDE EXTENSION TO MATCH GRADE.

WASTE FLOW CALCULATION SUMMARY

	GALLONS PER DAY (GPD)	# OF PEOPLE/ CARS	GPD
PER EMPLOYEE	8	8	64
PER CAR SERVED	8	45	360
		BUILDING TOTAL (GPD)	424

REMARKS:
1) NO CARS WASHED ON SITE.

SANITARY SYSTEM SUMMARY

TOTAL LOAD (FIXTURE UNITS)	GPM
12.5	14

WATER METER SUMMARY

TOTAL LOAD (FIXTURE UNITS)	GPM
16	18

AHO ARCHITECTS, LLC
www.ahoarch.com

8/12/26

Express Oil Change & Tire Engineers
Single Building / Right Hand Oil Change / Rear Enter / Side Tire Storage
Cross Roads, Texas (Aubrey)

FINAL

No.	Description	Date
IFP-0	Issued for Permit	06/30/26
IFB-0	Iss. fo Bid/AHJ Rev.	08/12/2026

© 2026 Aho Architects, LLC.
All Rights Reserved.

Plumbing Legend, Abbreviations, and Schedules

Project number	26013
Date	06/30/2026
Drawn by	CA
Checked by	JB

P0.01

Scale 12" = 1'-0"

9/1/2026 1:09:25 PM

SECTION 15011 - PLUMBING GENERAL

A. PROVIDE EQUIPMENT, LABOR, MATERIAL, ETC., REQUIRED TO MAKE A COMPLETE WORKING INSTALLATION.
B. INSTALL THE WORK IN ACCORDANCE WITH DRAWINGS, SPECIFICATIONS AND THE STANDARDS AND CODES (LATEST EDITION) THAT APPLY TO THIS WORK. IN THE EVENT OF A CONFLICT, INSTALL WORK IN ACCORDANCE WITH THE MOST STRINGENT CODE REQUIREMENTS DETERMINED BY THE ENGINEER.
C. OBTAIN AND PAY FOR ALL PERMITS AND INSPECTIONS INCLUDING: BUILDING PERMITS, HEALTH DEPARTMENT PERMITS AND SEWER TAP PERMITS. DELIVER TO ENGINEER CERTIFICATES OF INSPECTION AND APPROVAL ISSUED BY AUTHORITIES.
D. ALL EQUIPMENT AND METHOD SHALL BE INSTALLED AND CONNECTED IN ACCORDANCE WITH THE BEST ENGINEERING PRACTICES AND IN ACCORDANCE WITH THE MANUFACTURER'S RECOMMENDATIONS.
E. DISCONNECT, REMOVE AND RE-INSTALL PLUMBING SERVICES LOCATED ON OR CROSSING THROUGH CONTRACT LIMITS, ABOVE OR BELOW GRADE, OBSTRUCTING CONSTRUCTION OF PROJECT OR CONFLICTING WITH COMPLETED PROJECT OR ANY APPLICABLE CODES.
F. PROVIDE CUTTING OF PAVEMENT, SIDEWALKS, DRIVEWAYS, ETC., EXCAVATING, TRENCHING, SHORING AND DE-WATERING. PROVIDE BACKFILL MATERIAL AND PERFORM BACKFILLING.
G. RESTORE SITE TO ORIGINAL CONDITION OR NEW FINAL GRADES. PROVIDE PAVING, CONCRETE, SEED, OR SOD.
H. DRAWINGS AND SPECIFICATIONS ARE COMPLEMENTARY. WORK CALLED FOR BY ONE IS BINDING AS IF CALLED FOR BY BOTH.
I. DRAWINGS ARE DRAWN TO A SMALL SCALE AND ARE DIAGRAMMATIC ONLY. THE DRAWINGS INDICATE SIZE AND GENERAL ARRANGEMENT OF EQUIPMENT. DO NOT SCALE DRAWINGS FOR EXACT LOCATIONS. FIELD MEASUREMENTS TAKE PRECEDENCE.
J. PROVIDE NECESSARY OFFSETS, ELBOWS AND FITTINGS AS REQUIRED TO AVOID CONFLICT WITH EQUIPMENT OF OTHER DIVISIONS AND TO OBTAIN PROPER HEADROOM AND CLEAR PASSAGEWAYS. THIS SHALL BE DONE AT NO ADDITIONAL COST TO THE OWNER.
K. WORK UNDER THIS DIVISION SHALL BE FIRST CLASS WITH EMPHASIS ON NEATNESS AND WORKMANSHIP. INSTALL WORK USING COMPETENT MECHANICS, UNDER SUPERVISION OF FOREMAN, ALL DULY CERTIFIED BY LOCAL AUTHORITIES.
L. INSTALLATION SUBJECT TO ENGINEER'SOBSERVATION, FINAL APPROVAL, AND ACCEPTANCE. ENGINEER MAY REJECT UNSUITABLE WORK.
M. ALL MATERIALS SHALL BE NEW. ALL MATERIALS AND EQUIPMENT FOR WHICH A UL STANDARD, AN AGA APPROVAL, AN AWWA STANDARD, FM LISTING OR ASME REQUIREMENTS IS ESTABLISHED, SHALL BE SO APPROVED AND LABELED OR STAMPED.
N. THE DRAWINGS ARE BASED ON THE USE OF PRODUCTS SPECIFIED AND LISTED FIRST. IF ANY REVISION IN PIPING, CONDUIT WORK, FOUNDATIONS, ANCHOR BOLTS, CONNECTIONS, ETC., IS REQUIRED BY OTHER NAMED PRODUCTS OR APPROVED SUBSTITUTIONS, IT SHALL BE THE CONTRACTOR'S RESPONSIBILITY TO MAKE SUCH REVISIONS AT NO ADDITIONAL EXPENSE TO THE OWNER.
O. SUBMIT SIX (6) ORIGINAL COPIES OF COMPLETE SHOP DRAWINGS FOR ALL MATERIALS AND EQUIPMENT FURNISHED UNDER DIVISION 15 OF SPECIFICATIONS TO ENGINEER FOR REVIEW. SHOP DRAWINGS SHALL BEAR THE STAMP OF APPROVAL OF THE CONTRACTOR AS EVIDENCE THAT THE DRAWINGS HAVE BEEN CHECKED BY HIM. DRAWING SUBMITTED WITHOUT THIS STAMP OF APPROVAL WILL NOT BE CONSIDERED AND WILL BE RETURNED FOR PROPER RESUBMISSION.
P. REVIEW OF SHOP DRAWINGS DOES NOT RELIEVE CONTRACTOR OF RESPONSIBILITY FOR ERRORS AND OMISSIONS IN SHOP DRAWINGS. CONTRACTOR IS RESPONSIBLE FOR DIMENSIONS AND SIZES OF EQUIPMENT. INFORM ENGINEER IN WRITING OF EQUIPMENT DIFFERING FROM THAT SHOWN.
Q. PROVIDE MAINTENANCE AND OPERATING MANUALS BOUND IN 8-1/2" X 11" HARDBACK, THREE-POST BINDERS. MANUALS SHALL CONTAIN WRITTEN INSTRUCTIONS FOR EACH SYSTEM, SHOP DRAWINGS, SCHEMATIC DRAWINGS, EQUIPMENT CATALOG CUTS, MANUFACTURER'S INSTRUCTIONS, MANUFACTURERS WARRANTIES, AND VALVE TAG LIST.
R. PROVIDE AS-BUILT PRINTS AT THE COMPLETION OF JOB. KEEP ONE SET OF PRINTS ON JOB AND RECORD DAY TO DAY CHANGES TO CONTRACT DRAWINGS WITH RED PENCIL. INDICATE ACTUAL LOCATION OF PIPING, VALVES, AND EQUIPMENT. TURN OVER PRINTS TO ENGINEER AT FINAL OBSERVATION.
S. FURNISH ENGINEER WRITTEN WARRANTY, STATING THAT IF WORKMANSHIP AND/OR MATERIALS EXECUTED UNDER THIS DIVISION IS PROVEN DEFECTIVE WITHIN ONE (1) YEAR AFTER FINAL ACCEPTANCE, SUCH DEFECTS AND OTHER WORK DAMAGED WILL BE REPAIRED AND/OR REPLACED.

SECTION 15051 - BASIC MATERIALS AND METHODS

A. ACCESS PANELS:
1. ACCESS PANELS SHALL HAVE WELDED STEEL FRAME, ONE PIECE DOORS, AND SELF LATCHING DOOR LOCKS. LOCKS SHALL BE SCREW DRIVER OPERATED WITH CASE HARDENED STEEL CAM. PANELS SHALL BE MILCOR, CESCO, KARP OR EQUAL.
2. PROVIDE ACCESS PANELS IN WALLS AND CEILINGS AS NEEDED TO ALLOW ACCESS TO VALVES, EQUIPMENT, SHOCK ABSORBERS, TRAP PRIMERS, ETC. AND WHERE NOTED.
B. FIRESTOPPING AND SOUNDSTOPPING:
1. PENETRATIONS THROUGH FLOORS AND FIRE RESISTANT WALLS SHALL BE SEALED TO THE RATED FIRE RESISTANCE EQUAL TO THE WALL. INSTALLATION SHALL BE DONE BY A QUALIFIED INSTALLER, APPROVED BY THE MANUFACTURER.
2. PROVIDE SOUND PROOFING THROUGH NON-RATED WALLS.
C. PIPING SEALS:
1. PROVIDE MODULAR, RESILIENT SEALS AROUND PIPES PENETRATING ALL EXTERIOR WALLS, AND FLOORS BELOW GRADE. PIPING SEALS SHALL BE THUNDERLINE CORP. "LINK SEAL" LS SERIES.
D. CUTTING AND PATCHING:
1. CONTRACTOR SHALL BE RESPONSIBLE FOR CUTTING AND PATCHING. CUT WALLS, FLOORS, CEILINGS, PARTITIONS, ETC., REQUIRED FOR THE INSTALLATION OF THIS WORK IN A NEAT AND CAREFUL MANNER. CORE DRILL FOR PIPE SLEEVES AND OTHER OPENINGS THROUGH FLOORS AND WALLS. SAWCUT LARGER OPENINGS. CUTTING SHALL BE KEPT TO A MINIMUM.

2. REPLACE OR REPAIR DUCTWORK, CONDUIT, PIPING, ETC., THAT IS CUT. PATCH AROUND OPENING CUT BY THIS CONTRACTOR OR PROVIDED BY OTHERS FOR HIM. PATCHING SHALL BE DONE BY AN APPROVED QUALIFIED CONTRACTOR, BUT SHALL BE PAID FOR BY THIS CONTRACTOR. FINISHED PATCHING SHALL RETAIN FIRE AND SMOKE RATINGS OF THE ASSEMBLY AND SHALL MATCH SURROUNDING FINISH.
E. ANCHORS:
1. MOUNT ALL EQUIPMENT, BRACKETS, HANGERS, ANCHORS, ETC. TO SAFELY RESIST THE VIBRATION OR THRUST FORCES AND SUPPORT THE UNIT'S WEIGHT.
2. FLOOR MOUNTED ROTATING OR VIBRATING EQUIPMENT SHALL BE ANCHORED TO THE FLOOR USING GROUTED-IN-PLACE OR CAST-IN-PLACE ANCHOR BOLTS WITH THREE INCH HOOK AND SLEEVE. ANCHOR BOLTS SHALL BE OF THE SIZE RECOMMENDED BY THE MANUFACTURER.
3. FLOOR MOUNTED STATIC ITEMS, WALL AND CEILING MOUNTED EQUIPMENT BRACKET AND HANGERS SHALL BE INSTALLED USING DRILLED ANCHORS ![OR CAST IN PLACE INSERTS]. ANCHORS SHALL BE PHILLIPS DRILL COMPANY "RED HEAD" OR MULTI-SET II. SIZE ANCHORS ![AND INSERTS] FOR FOUR TIMES THE APPLIED LOAD. BOLTS USED OUTDOORS OR IN A WET ENVIRONMENT SHALL BE HOT DIP GALVANIZED.
A. PIPE IDENTIFICATION:
1. IDENTIFICATION SHALL BE IN ACCORDANCE WITH ANSI-A13.1. PIPE MARKERS SHALL BE SETON'S WEATHER-CODE OR EQUAL.
2. PROVIDE PIPE MARKERS AND DIRECTIONAL ARROWS ON PIPES AT BOTH SIDES OF PARTITIONS AND FLOORS SLABS, AT BRANCH LINE TAKE-OFFS, AT VALVES, AT INTERMEDIATE INTERVALS NOT IN EXCESS OF 20 FT. AND AT CONNECTIONS TO EQUIPMENT.
3. TAPE COLOR BAND IDENTIFYING MARKERS AND ARROWS ON EACH PIPE, BOTH INSULATED AND BARE PIPES. PIPE MARKERS AND ARROWS SHALL BE LOCATED WHERE READILY VISIBLE AND ON LOWER QUADRANTS OF OVERHEAD PIPES.
B. VALVE TAG AND CHART:

1. VALVE TAGS SHALL BE SETON M4506, BLACK FILLED LETTERS WITH BRASS JACK CHAIN. ONE VALVE NUMBER SHALL BE STAMPED ON EACH TAG. IDENTIFY EACH VALVE TAG FOR THE UTILITY IT SERVES, SUCH AS "CW" FOR COLD WATER, HW FOR HOT WATER, ETC. VALVE CHARTS SHALL BE SETON. ATTACH A NUMBERED VALVE TAG TO EACH VALVE.
2. PROVIDE A TYPE WRITTEN CHART IN FRAME UNDER GLASS COVER, GIVING THE FULL LIST OF ALL VALVES INSTALLED UNDER THIS CONTRACT. CHART SHALL LIST VALVE NUMBER, TYPE OF UTILITY, AND LOCATION. MOUNT CHART WHERE DIRECTED BY OWNER. PROVIDE ONE ADDITIONAL COPY TO OWNER.
A. EQUIPMENT IDENTIFICATION:
1. IDENTIFY EACH PIECE OF EQUIPMENT WITH A 1/8 INCH THICK ENGRAVED MELAMINE PLASTIC LAMINATE NAMEPLATE. LETTERS SHALL BE 1/2 INCH HIGH STANDARD STYLE. NAMES, ABBREVIATIONS, AND NUMBERING SHALL AGREE WITH THE CORRESPONDING EQUIPMENT DESIGNATIONS SHOWN ON THE DRAWINGS. USE BLACK LETTERS CUT IN A WHITE BACKGROUND FOR ALL EQUIPMENT ON STANDARD ELECTRICAL POWER
2. FASTEN NAMEPLATES TO EQUIPMENT IN A CONSPICUOUS LOCATION USING SELF-TAPPING STAINLESS STEEL SCREWS, EXCEPT USE CONTACT EPOXY ADHESIVE WHERE SCREWS CANNOT OR SHOULD NOT PENETRATE SUBSTRATE.
B. PIPE SLEEVES:
1. PROVIDE PIPE SLEEVES WHERE PIPES PASS THROUGH FLOORS AND WALLS ABOVE OR BELOW CEILINGS. PROVIDE PIPE SLEEVES IN NEW WALLS AND FLOORS AS THE WORK PROGRESSES. PROVIDE SPLIT PIPE SLEEVES IN NEW WALLS BUILT UP AROUND EXISTING PIPES. TACK WELD SPLIT SLEEVES TOGETHER.
2. SIZE PIPE SLEEVES TO ALLOW CONTINUOUS INSULATION, BUT NOT LESS THAN TWO PIPE SIZES LARGER THAN PIPE. SLEEVES IN WALLS SHALL BE FLUSH WITH WALL, SLEEVES IN FLOORS SHALL EXTEND 3/4 INCHES ABOVE FLOOR AND BE FLUSH WITH STRUCTURE BELOW.
3. SLEEVES IN CONCRETE WALLS, FLOORS OR MASONRY SHALL BE SCH 40 STEEL PIPE, MACHINE CUT. SLEEVES IN GYPSUM BOARD OR PLASTER WALLS SHALL BE 14 GAUGE, ROLLED GALVANIZED SHEET METAL TACK WELDED ON THE LONGITUDINAL SEAM.
4. PROVIDE PLATES AROUND PIPES EXTENDING INTO EXPOSED AREAS WHERE THEY PASS THROUGH WALLS, FLOORS AND CEILINGS. SIZE PLATES TO COMPLETELY COVER PIPE SLEEVES. PLATES SHALL BE BEATON AND CADWELL, KEENEY OR GRINNELL, NICKEL PLATED STEEL, SPLIT PLATES WITH SET SCREW. CONCRETE FLOOR PLATE SHALL BE GRINNELL FIGURE 400.
C. FLASHING:
1. PROVIDE FLASHING AT PIPING AND DUCT PENETRATIONS THROUGH ROOF AND ROOF MOUNTED STRUCTURES FURNISHED UNDER THIS DIVISION. FLASH IN ACCORDANCE WITH ROOFING MANUFACTURERS DETAILS. FLASHING MATERIALS SHALL BE IN ACCORDANCE WITH THE ROOFING MANUFACTURERS SYSTEM.
2. PROVIDE FLASHING AT PIPES PASSING THROUGH FLOORS WITH WATERPROOF MEMBRANE. FLASHING SHALL BE IN ACCORDANCE WITH WATERPROOFING MANUFACTURER'S DETAILS.

SECTION 15261 - PLUMBING INSULATION

A. GENERAL:
1. ALL INSULATION, JACKETING, AND ADHESIVE SHALL HAVE COMPOSITE SURFACE BURNING CHARACTERISTIC RATING AS TESTED BY ASTM E 84, UL 723, OR NFPA 255 NOT EXCEEDING A FLAME SPREAD OF 25 OR SMOKE DEVELOPED OF 50.
2. SUBMITTALS SHALL USE PAGES FROM MIDWEST INSULATION CONTRACTORS ASSOCIATION – "COMMERCIAL AND INDUSTRIAL INSULATION STANDARDS" FOR DEFINING HOW INSULATION MATERIALS WILL BE APPLIED.
3. ALL PIPE INSULATION SHALL BE CONTINUOUS THROUGH WALLS, CEILING OR FLOOR OPENINGS, OR SLEEVES; EXCEPT WHERE FIRESTOP OR FIRESAFING MATERIALS ARE REQUIRED.
4. INSULATE ITEMS MOUNTED IN PIPING WITH THE SAME THICKNESS OF INSULATION AS SPECIFIED FOR PIPING.
5. REPAIR INSULATION DAMAGED BY WORK UNDER THIS CONTRACT TO MATCH EXISTING WORK OR REPLACE DAMAGED PORTION WITH INSULATION SPECIFIED FOR NEW WORK.
B. DOMESTIC WATER PIPING:
1. INSULATION SHALL BE 850 DEG. F RATED AS MANUFACTURED BY OWENS CORNING, MANVILLE OR KNAUF. ROUTED OR MOLDED FITTING INSULATION SHALL BE HAMFAB.
2. INSULATION SHALL HAVE FACTORY-APPLIED, REINFORCED, FLAME RETARDANT, VAPOR BARRIER JACKET EQUAL TO OWENS-CORNING ASJ WITH SELF-SEALING LAP. BUTT JOINTS SHALL BE TAPED WITH FIELD-APPLIED ASJ TAPE 3 IN. WIDE.
3. INSULATION THICKNESSES SHALL BE IN ACCORDANCE WITH INTERNATIONAL ENERGY CONSERVATION CODE FOR PIPE SIZES NOTED ON PLAN. PROVIDE 1" INSULATION ON HOT WATER PIPING IN ACCORDANCE WITH FLORIDA PLUMBING CODE 607.2.1.
4. ALL FITTINGS AND VALVES SHALL BE INSULATED WITH PREFORMED FIBER GLASS FITTINGS OR MITERED SECTIONS OF PIPE INSULATION. INSULATION SHALL BE OF EQUAL THICKNESS TO THE ADJACENT PIPE INSULATION.
5. METAL SHIELDS SHALL BE INSTALLED BETWEEN HANGERS OR SUPPORTS AND THE PIPING INSULATION. RIGID INSULATION INSERTS SHALL BE INSTALLED AS REQUIRED BETWEEN THE PIPE AND THE INSULATION SHIELDS. INSERTS SHALL BE OF EQUAL THICKNESS TO THE ADJACENT INSULATION AND SHALL BE VAPOR SEALED AS REQUIRED.
C. ELASTOMERIC CLOSED CELL INSULATION:
1. INSULATION SHALL BE RUBATEX OR ARMSTRONG. SECURE INSULATION WITH CONTACT ADHESIVE IN ACCORDANCE WITH MANUFACTURERS INSTRUCTIONS. EXPOSED OR EXTERIOR INSTALLATIONS SHALL BE PAINTED WITH TWO COATS OF WATER BASE LATEX ENAMEL.
2. PROVIDE 1 IN. THICK INSULATION ON DX REFRIGERANT PIPING, COOLING COIL CONDENSATE PIPING, AND CAPS FOR ALL VALVE STEMS AND OPERATORS, GAUGE COCKS, THERMOMETER WELLS AND OTHER APPURTENANCES SUBJECT TO SWEATING.
D. PIPING FINISHES:
1. METAL JACKETING SHALL BE, SMOOTH .016 IN. THICK, TYPE T 3003 ALUMINUM WITH LAMINATED MOISTURE BARRIER. JACKETING SHALL BE CHILDERS, ALUMINUM ROLL JACKETING WITH POLYKRAFT MOISTURE BARRIER. COVER THE FOLLOWING INSULATED SYSTEMS WITH METAL JACKETING: PIPING INSTALLED OUTDOORS AND EXPOSED PIPING INDOORS WITHIN 8 FT. OF FINISHED FLOOR. METAL FITTING COVERS SHALL BE TWO PIECE ALUMINUM. COVERS SHALL BE ELL-JAC.
2. CONCEALED PIPING FINISH COVERING SHALL BE THE ALL SERVICE JACKET. FITTINGS SHALL BE COVERED BY WRAPPING THE FITTING WITH FIBER REINFORCED TAPE, WITH A 5 PERCENT OVERLAP. FITTING COVERS SHALL BE ONE PIECE 20 MIL PVC. COVERS SHALL BE CEEL-TITE 550 PVC-UVR BY CEEL-CO OR EQUALS.

SECTION 15410 - PLUMBING PIPING

A. THE WORK REQUIRED UNDER THIS SECTION INCLUDES ALL WORK NECESSARY FOR A COMPLETE INSTALLATION OF SANITARY WASTE PIPING, STORM PIPING AND DOMESTIC WATER PIPING INSIDE THE BUILDING TO 5 FEET OUTSIDE THE BUILDING. SUBMIT SCHEDULE OF PIPE AND FITTINGS FOR EACH SERVICE.
B. DOMESTIC WATER PIPING: WATER PIPING WITHIN THE BUILDING SHALL BE COPPER TUBE, TYPE "L" HARD TEMPER, ASTM B-88. PIPING BELOW GROUND SHALL BE COPPER TUBE, TYPE "K" SOFT TEMPER, ASTM B-88. FITTINGS SHALL BE WROUGHT COPPER, SOLDER TYPE, ASTM B-75, ANSI B16.22. SOLDER UNIONS SHALL BE WROT COPPER, WITH COPPER GROUND JOINT. ASTM B75, ANSI B16.22. DI-ELECTRIC, EPSO, 250 LB. WOG. SOLDER METAL SHALL CONFORM TO ASTM B32, LEAD-FREE.
C. STORM, SANITARY WASTE, AND VENT PIPING: ABOVE GROUND: SCHEDULE 40 PVC-DWV ASTM D-2665 USING SOLVENT CEMENT ASTM D02565. HORIZONTAL PIPING FOR FIXTURE ROUGH-INS MAY BE DWV COPPER, ASTM B-306. BELOW GROUND: SCHEDULE 40 PVC-DWV ASTM D-2665 USING SOLVENT CEMENT ASTM D-2564.
D. STORM, SANITARY WASTE AND VENT FITTINGS: ABOVE GROUND: ![NO HUB CAST IRON SOIL PIPE FITTINGS WITH COUPLING ASSEMBLY CISPI STANDARD 310.] SCHEDULE 40 PVC-DWV, ASTM D-2855 USING SOLVENT CEMENT ASTM D-2564. BELOW GROUND: SCHEDULE 40 PVC-DWV, ASTM D-2855 USING SOLVENT CEMENT ASTM D-2564.
E. BALL VALVES: VALVES SHALL BE NIBCO T-585-70, FULL PORT BALL TYPE WITH BRONZE BODY, CHROME PLATED BALL AND BRONZE THREADED ENDS, 600 PSI WOG OR NIBCO S-585-70 IN COPPER LINES. HAMMOND, CRANE, APOLLO, MILWAUKEE, OR APPROVED EQUAL.
F. ALL PIPING SHALL BE ROUTED TO CONSERVE BUILDING SPACE, BE COORDINATED WITH ITEMS INSTALLED BY OTHER TRADES AND NOT INTERFERE WITH ACCESS TO OR OPERATION OF THE FACILITY.
G. PROVIDE ROOF FLASHINGS FOR PIPE PENETRATIONS THROUGH ROOF, TO BE INSTALLED BY ROOFING CONTRACTOR
H. WATER PIPING WITHIN BUILDING SHALL BE SIZE INDICATED ON PLANS AND RISERS. IN THE EVENT NO SIZE IS SHOWN, PIPE SIZE OR SIZE REQUIRED BY THE PLUMBING CODE. PIPING SHALL BE SLOPED TOWARD A SYSTEM DRAIN AND TOWARD OUTLETS, TO PROVIDE FOR SYSTEM DRAIN-DOWN. IF INSTALLED NEAR EXTERIOR WALLS, PIPING SHALL BE LOCATED ON THE INTERIOR SIDE OF INSULATION. INSTALL PIPING TO PREVENT DIRECT CONTACT BETWEEN FERROUS AND NON-FERROUS MATERIALS. ALLOW FLEXIBILITY FOR EXPANSION IN PIPING.
I. DOMESTIC WATER PIPING SYSTEM SHALL BE TESTED WITH POTABLE WATER AT A PRESSURE OF 125 PSIG OR 25 PSIG ABOVE DESIGN WORKING PRESSURE, WHICHEVER IS GREATER FOR 12 HOURS. TEST SHALL BE CONDUCTED WITH PLUMBING INSPECTOR UNLESS APPROVED OTHERWISE IN WRITING.
J. WATER DISTRIBUTION PIPING SHALL BE DISINFECTED PRIOR TO OCCUPANCY OR SYSTEM START-UP WITH A CHLORINE SOLUTION 50 PPM. ALLOW SYSTEM TO STAND FOR SIX HOURS MINIMUM, THEN EXERCISE ALL VALVES TO ENSURE TREATMENT OF ALL BRANCHES AND COMPONENTS. SYSTEM SHALL BE FLUSHED WITH POTABLE WATER AFTER DISINFECTION AND PRIOR TO PLACEMENT INTO SERVICE.
K. STORM, SANITARY WASTE AND VENT PIPING SHALL BE TESTED IN ACCORDANCE WITH WATER AND AIR TESTS AS SPECIFIED IN THE INTERNATIONAL PLUMBING CODE, IN ADDITION TO ANY TESTS REQUIRED BY THE LOCAL PLUMBING OFFICIAL. (10 FEET OF HEAD WITH NO APPARENT LEAKS. HOLD FOR 30 MINUTES MINIMUM). FLUSH ALL GRAVITY PIPING INCLUDING FLOOR DRAINS AND ROOF DRAINS PRIOR TO TURNING OVER TO THE OWNER.
L. ALL PIPE SHALL BE CUT SQUARE. REAM PIPE AND TUBE ENDS AND REMOVE BURRS. CLEAN THE ENDS OF PIPES TO REMOVE OIL, GREASE AND OXIDES. PREPARE PIPING CONNECTIONS TO EQUIPMENT WITH FLANGES OR UNIONS.
M. ALL SOLDERED PIPING AND EQUIPMENT CONNECTIONS SHALL BE PROPERLY PREPARED IN ACCORDANCE WITH GOOD PIPING PRACTICE. APPLY A THIN LAYER OF FLUX TO ONLY THE MALE TUBING. ROTATE INTO THE FITTING WITH ONE OR TWO REVOLUTIONS.
N. DOMESTIC WATER PIPING: ROUTE PIPING IN ORDERLY MANNER, PLUMB AND PARALLEL TO BUILDING STRUCTURE, AND MAINTAIN GRADIENT. INSTALL PIPING TO ALLOW FOR EXPANSION AND CONTRACTION WITHOUT STRESSING PIPE, JOINTS, OR CONNECTED EQUIPMENT. PROVIDE CLEARANCE FOR INSTALLATION OF INSULATION AND ACCESS TO VALVES AND FITTINGS. PROVIDE ACCESS WHERE VALVES AND FITTINGS ARE NOT EXPOSED. INSTALL VALVES WITH STEMS UPRIGHT OR HORIZONTAL. PROVIDE DRAIN VALVES AT LOW POINTS IN SYSTEMS. TEST WATER PIPING BEFORE BEING INSULATED OR CONCEALED IN WALLS OR CEILING.
O. STORM, SANITARY WASTE, AND VENT PIPING: HORIZONTAL SOIL, WASTE AND DRAINAGE LINES WITHIN BUILDING SHALL HAVE A MINIMUM UNIFORM SLOPE OF 1/8 INCH PER FOOT ON 3 INCH AND LARGER, AND 1/4 INCH PER FOOT ON LINES 2 INCH AND SMALLER. TURNS IN SANITARY, SOIL, AND DRAIN PIPING SHALL BE MADE USING 45 DEGREE ELBOWS, WYES, QUARTER, EIGHTH, SIXTEENTH BENDS, OR OTHER BENDS APPROVED BY THE PLUMBING CODE. DO NOT USE SANITARY TEES OR CROSSES EXCEPT WHERE DISCHARGING FROM HORIZONTAL TO VERTICAL. MAKE CHANGES IN PIPE SIZES WITH REDUCING FITTINGS AND RECESSED REDUCERS. DO NOT REDUCE LINE SIZE IN DIRECTION OF FLOW. PROVIDE CLEANOUTS IN ALL HORIZONTAL TURNS IN WASTE PIPING GREATER THAN 45 DEGREES. PROVIDE DEEP SEAL TRAPS ON ALL FLOOR DRAINS, AND TRAP PRIMERS/SEAL WHERE REQUIRED BY CODE OR AS INDICATED ON DRAWINGS. INDIRECT WASTE LINES DUMPING INTO FLOOR OR HUB DRAINS SHALL MAINTAIN A 2-INCH AIR GAP BETWEEN THE END OF THE WASTE LINE AND THE RIM OF THE FLOOR OR HUB DRAIN.

SECTION 15416 - GAS PIPING SYSTEMS

A. PROVIDE COMPLETE INSTALLATION OF GAS PIPING FROM THE "POINT OF DELIVERY" UP TO AND INCLUDING CONNECTION TO ALL GAS-FIRED EQUIPMENT. CONNECT EQUIPMENT ITEMS FURNISHED UNDER OTHER SECTIONS OF SPECIFICATIONS. TEST IN ACCORDANCE WITH A.G.A., STANDARD GAS CODE, N.F.P.A. 54, AND APPLICABLE STATE AND LOCAL CODES.
B. ROUTE GAS SERVICE ENTRANCE PIPING INTO BUILDING TO AVOID INTERFERENCE AND DAMAGE. PROVIDE MANUAL SHUTOFF VALVE, GAS COCK AND GAUGE. VALVES SHALL BE LABELED.
C. PROVIDE ACCESS PANELS FOR VALVES AND OTHER ITEMS REQUIRING MAINTENANCE IN ENCLOSED SPACES. AVOID INSTALLING GAS APPURTENANCES IN ENCLOSED SPACES WHERE POSSIBLE. INSTALL IN ENCLOSED SPACES ONLY AS ALLOWED BY APPLICABLE CODES.
D. SUBMIT MANUFACTURER'S LITERATURE ON ALL MATERIALS AND EQUIPMENT INCLUDING: PIPE, PIPE COATING, ANODES, VALVES, FLEXIBLE CONNECTORS, FITTINGS, REGULATORS, RELIEF VALVES, GAUGES.
E. GAS SERVICE:
1. COORDINATE INSTALLATION OF GAS SERVICE LINE WITH LOCAL GAS COMPANY. PAY ALL FEES.
2. PROVIDE 12 INCH ELEVATED METER MOUNTING PADS ON TOP OF A 4 INCH THICK CONCRETE PAD FOR SUPPORT OF GAS METER AND PIPING.
3. PROVIDE (TWO) 8 INCH DIAMETER PIPE BOLLARDS FOR GAS METER PROTECTION. BOLLARDS SHALL BE SIX FEET LONG (3 FEET BELOW GRADE), MOUNTED IN A 24 INCH DIAMETER HOLE, FILLED WITH 3,000 PSI CONCRETE.
F. INTERIOR PIPING: CONNECT TO ENTERING LINE AND DISTRIBUTE GAS TO EQUIPMENT ITEMS REQUIRING GAS AND AS INDICATED. PERFORM WORK IN ACCORD WITH APPLICABLE A.G.A., N.F.P.A. 54, STATE AND LOCAL CODES. INSTALL GAS STOP VALVES AND DRIP LEGS AT EACH EQUIPMENT ITEM. PIPING SHALL BE ADEQUATELY DRAINED WITH A MINIMUM SLOPE OF 1/4 INCH PER 15 FEET AND DRIP LEGS (FULL SIZE OF PIPE) INSTALLED AT ADDITIONAL POINTS WHERE CONDENSATE MAY COLLECT. INSTALL PRESSURE REDUCING VALVES AS REQUIRED TO PROVIDE PRESSURE WITHIN EQUIPMENT MANUFACTURER'S REQUIREMENTS.
G. EXTERIOR PIPING: EXTERIOR PIPING SHALL BE SCHEDULE 40 CARBON STEEL. PIPING 2 INCH AND SMALLER MAY USE THREADED FITTINGS. PIPING 2 2 INCH AND LARGER SHALL USE WELDED FITTINGS AND FLANGED VALVES. EXTERIOR PIPING SHALL BE COATED WITH AN ALKYD ENAMEL PRIMER (MINIMUM DRY THICKNESS 3 MILS). EXTERIOR PIPING SHALL BE SUPPORTED ON GALVANIZED B-LINE CHANNELS AND PIPE CLAMPS.
H. UNDERGROUND PIPING:
1. UNDERGROUND PIPING SHALL BE CARBON STEEL - A53/A106-WELDED OR POLYETHYLENE. UNDERGROUND STEEL PIPING SHALL HAVE AT LEAST 18 INCH OF PROPER BACKFILL COVER.
2. UNDERGROUND PIPING SHALL BE PROTECTED FROM CORROSION. PROVIDE COATED PIPING AND FITTINGS. REPAIR DAMAGED COATING AT WELDS. INSTALL SACRIFICIAL ANODES ON STEEL PIPING INTERVALS NOT EXCEEDING 100 FT.
3. WHERE PIPES PENETRATE BASEMENT WALLS AND FOUNDATIONS INSTALL THUNDERLINE LINK SEAL.
4. 1. GAS LINES ROUTED UNDER A BUILDING SHALL BE STEEL AND SHALL BE ENCASED IN A SCH 40 OUTER CONDUIT (AT LEAST 3 PIPE SIZES LARGER THAN THE GAS LINE). CONDUIT SHALL BE SEAL WELDED TO THE GAS PIPE INSIDE THE BUILDING. CONDUIT SHALL BE VENTED TO OUTDOORS. CONDUIT SHALL BE PROTECTED FROM CORROSION SIMILARLY TO UNDERGROUND PIPING.
I. PIPE/TUBING:
1. STEEL PIPE: ASTM A53 GRADE A OR B, TYPE F, ERW OR SEAMLESS. SCHEDULE 40.
2. ASTM A106 SEAMLESS. SCHEDULE 40.
3. TUBING (STEEL) ASTM A539.
4. PLASTIC PIPE ASTM D2513 POLYETHYLENE. DRISCO PIPE 6500 OR PRIOR APPROVED EQUAL.
J. FITTINGS:
1. WELDED (STEEL): WELDING FITTINGS SHALL BE CARBON STEEL BUTT WELDING TYPE CONFORMING TO ASTM-234. ELBOWS SHALL BE LONG RADIUS TYPE. WELDING TEES SHALL BE USED ON BRANCH CONNECTIONS EQUAL TO OR GREATER THAN 2 THE DIAMETER OF THE MAIN RUN. FITTINGS SHALL BE LADISH, TUBE-TURN OR WELDBAND. CARBON STEEL REINFORCED BRANCH, WELDING FITTINGS UP TO 3 INCHES, BUT NOT GREATER THAN 2 THE DIAMETER OF THE MAIN RUN MAY BE USED. FITTINGS SHALL BE BONNEY FORGE OR PHOENIX FORGING.
2. THREADED (MALLEABLE, IRON): SCREWED FITTINGS SHALL BE MALLEABLE IRON ASTM A-197 CLASS 150 CONFORMING TO ANSI B16.3. DIMENSIONS CONFORMING TO FEDERAL SPEC WW-P-521. FITTINGS SHALL BE GRINNELL, FLAGG OR STOCKHAM.
3. HEAT FUSION/COMPRESSION (POLYETHYLENE): SOCKET TYPE FUSION SHALL MEET THE REQUIREMENTS OF ASTM 2683. FITTINGS SHALL BE LISTED AND MARKED ASTM D2513. BUTT TYPE FUSION FITTING SHALL MEET THE REQUIREMENTS OF ASTM D3261.
K. UNIONS (DIELECTRIC): CLASS 250 MALLEABLE, SCREWED ASTM A-197.
L. VALVES:
1. 1 INCH AND SMALLER: BALL VALVE - CLASS 125 BRASS FULL PART, 2 PIECE BODY, CHROME PLATED BALL, BLOWOUT PROOF STEAM, TFE SEATS.
2. 2 INCHES AND SMALLER: PLUG COCK - CLASS 125 CAST IRON, SCREWED, FULL PORT AGA LISTED. ANSI B16.33 HOMESTEAD FIGURE 601.
3. 2 2 INCHES AND LARGER: PLUG VALVE - CLASS 125 FLANGED CAST IRON ASTM A126 CONFORMING TO ANSI B16.1.
M. PIPE COATING: X-TRU COAT OR PRIOR APPROVED EQUAL INCLUDING JOINTS AND FITTINGS.
N. PRESSURE REGULATORS: CAST IRON OR ALUMINUM BODY AND SPRING CASE WITH STAINLESS STEEL VALVE STEAM, SEAT RING AND VALVE PLUG, PLATED STEEL SPRINGS, NEOPRENE DIAPHRAGM AND GASKETS AND TFE DISC. REGULATING VALVES SHALL BE SIZED FOR THE FLOW INDICATED AND FOR INLET AND OUTLET PRESSURES INDICATED. OUTLET PRESSURE SHALL BE MAINTAINED UNDER THE DESIGN FLOW CONDITION AND AT NO FLOW. REGULATING VALVES TWO PSI AND BELOW SHALL HAVE LEAK LIMITING DEVICES. REGULATING VALVES OVER TWO PSI SHALL BE VENTED FULL SIZE TO OUTSIDE OF THE BUILDING. OTHER REGULATING VALVES REQUIRING ACCESS TO THE ATMOSPHERE SHALL BE EQUIPPED WITH VENT PIPING LEADING TO OUTSIDE. PROVIDE A PRESSURE RELIEF VALVE IF THE REGULATOR CONNECTION SIZE EXCEEDS TWO-INCHES. REGULATING VALVES SHALL BE FISHER, MAXITROL OR PRIOR APPROVED EQUAL MEETING ANSI Z21.18.
O. PRESSURE GAGE: FOR MEDIUM PRESSURE GAS; 0-5 PSI RANGE. FOR LOW PRESSURE GAS; 0-30 INCH W.C. RANGE. USE LOW PRESSURE TYPE 2-1/2 INCH DIAL PRESSURE GAGE WITH APPROPRIATE RANGE, OCI MODEL CO 34, TRERICE, WEKSLER OR APPROVED EQUAL.

Pinnacle ENGINEERING, INC
Engineering & Design Consultants
2031 Shady Crest Dr
Birmingham, AL 35216
(205) 733-6912 FAX: (205) 733-6913
Job No.26152

AHO ARCHITECTS, LLC
www.ahoarch.com

STATE OF TEXAS
JAMES HOGLAND, JR.
93348
PROFESSIONAL ENGINEER
8/12/26

Express Oil Change & Tire Engineers
Single Building / Right Hand Oil Change / Rear Enter / Side Tire Storage
Cross Roads, Texas (Aubrey)

FINAL

No.	Description	Date
IFP-0	Issued for Permit	06/30/26
IFB-0	Iss. fo Bid/AHJ Rev.	08/12/2026

© 2026 Aho Architects, LLC.
All Rights Reserved.

Plumbing Specifications

Project number	26013
Date	06/30/2026
Drawn by	CA
Checked by	JB

P0.02

Scale	12" = 1'-0"

9/1/2026 1:09:26 PM

SECTION 15430 - PLUMBING SPECIALTIES

A. THIS SPECIFICATION DESCRIBES THE REQUIREMENTS FOR LABOR AND MATERIALS REQUIRED FOR THE INSTALLATION OF PLUMBING SPECIALTIES INCLUDED AS PART OF THE BUILDING PLUMBING SYSTEM.
B. MANUFACTURER'S LITERATURE INDICATING MODEL NUMBERS AND OPTIONS SHALL BE SUBMITTED FOR ALL FIXTURES AND EQUIPMENT. FORMAT SHALL INCLUDE A SCHEDULE OF THE SPECIALTIES SUBMITTED AND INCLUDE IDENTIFICATION NUMBER OF EACH ITEM, SUCH AS "FD-1 FLOOR DRAIN," A LIST OF EACH COMPONENT, ACCESSORY, AND OPTION OF THE ITEM BEING SUBMITTED. THIS SCHEDULE MUST BE INCLUDED IN THE FRONT OF THE SUBMITTAL PAGE.
C. CLEANOUTS SHALL CONSIST OF A COATED CAST IRON BODY WITH THREADED TOP WITH SPIGOT OR NO-HUB CONNECTION AND GASKETED BRONZE CLOSURE PLUG WITH COUNTERSUNK SLOT. HEAD SHALL BE ADJUSTABLE IN HEIGHT; PROVIDE NON-SKID COVERS FOR FLOOR CLEANOUTS. PROVIDE THREAD SHIELD TO PROTECT ADJUSTMENT THREADS FROM CONCRETE AS REQUIRED. CLEANOUTS SHALL BE INSTALLED IN HORIZONTAL RUNS AT SPACING OF NO MORE THAN 75 FEET. INSTALL CLEANOUTS AT THE BASE OF EVERY SOIL AND WASTE STACK, AND AT EACH 90 DEGREE CHANGE IN DIRECTION. INSTALL CLEANOUTS WHICH ARE NOT EASILY ACCESSIBLE UP THROUGH FLOOR OR WALL AND PROVIDE APPLICABLE COVERS. INSTALL CLEANOUTS TO ALLOW AT LEAST 18" FOR RODDING.
D. WATER HAMMER ARRESTORS SHALL BE CONSTRUCTED OF A STAINLESS STEEL OR COPPER SHELL, STAINLESS STEEL OR ELASTOMER BELLOWS, WITH PRECHARGE OF AIR, NITROGEN, OR ARGON. ARRESTERS SHALL CONFORM TO ASSE STD. 1010, AND SHALL BE ZURN "SHOKTROL", JOSAM "ABSORBOTRON", WADE "SHOKSTOP", OR PRECISION PLUMBING PRODUCTS "SHOCK ARRESTOR". UNIT SHALL BE SIZED IN ACCORDANCE WITH TO PDI STANDARDS. WATER HAMMER ARRESTORS SHALL BE SIZED TO ACTUAL PIPE SIZE AND INSTALLED AS NEAR THE SHOCK SOURCE AS PRACTICAL. INSTALL TO ALLOW UNOBSTRUCTED PATH FROM SHOCK SOURCE TO ARRESTOR.
E. BALANCING VALVES (DOMESTIC HOT WATER RETURN): VALVES SHALL BE BELL AND GOSSETT CB SERIES CIRCUIT SETTER. PRESETTABLE BALANCE VALVE, VARIABLE ORIFICE FLOW METER AND POSITIVE SHUT-OFF SERVICE VALVE. EQUIPMENT WITH CAPPED READOUT VALVES FITTED WITH INTERNAL CHECK VALVES, ¼ INCH NPT TAPPED AND PLUGGED DRAIN PORT. BRONZE BODY/BRASS BALL CONSTRUCTION WITH GLASS AND CARBON FILLED TFE SEAT RINGS, SOLDER CONNECTIONS. VALVES TO HAVE DIFFERENTIAL PRESSURE READ-OUT PORTS ACROSS VALVE SEAT AREA. FURNISH WITH PREFORMED INSULATION TO PERMIT ACCESS FOR BALANCE AND READ-OUT. TACO IS AN APPROVED EQUAL.
F. PRESSURE REDUCING VALVES: VALVES SHALL BE EQUAL TO WATTS SERIES U5B-GG BRONZE BODY SINGLE SEATED WITH COMPOSITION DIAPHRAGM AND STAINLESS STEEL SPRING, DIRECT ACTING WITH STRAINER ON INLET SIDE, INTEGRAL BY-PASS CHECK VALVE, GAUGE, AND THREADED ENDS. INSTALL IN ACCORDANCE WITH MANUFACTURER'S INSTRUCTIONS.
G. TRAP GUARD SEALS: PROVIDE AN ELASTOMERIC, NORMALLY CLOSED TRAP GUARD DEVICE TO PREVENT EVAPORATION OF THE TRAP SEAL AND TO PROTECT AGAINST SEWER GASES FROM BACKING UP INTO HABITABLE AREAS. DEVICE SHALL OPEN WITH FLUID AND ALLOWS LIQUID DRAINAGE TO FLOW THROUGH INTO THE BUILDING DRAIN. TRAP SEAL SHALL BE TRAP GUARD BY PRO-VENT SYSTEMS OR APPROVED EQUAL.
H. FLOOR DRAINS (FD-1): DRAIN SHALL INCLUDE COATED CAST IRON BODY WITH BOTTOM OUTLET, ½" TRAP PRIMER CONNECTION, COMBINATION INVERTIBLE MEMBRANE CLAMP AND ADJUSTABLE COLLAR WITH TYPE "B" ROUND POLISHED NICKEL-BRONZE LIGHT DUTY STRAINER TOP WITH SQUARE HEELPROOF OPENINGS AND SECURED GRATE. DRAIN SHALL BE ZURN ZN-415-P-NH OR EQUAL BY JAY R. SMITH, WADE, OR JOSAM. PROVIDE 3 FT. SQ., 6 MIL BUTYL MEMBRANE, AT EACH FLOOR DRAIN. CLAMP MEMBRANE. MEMBRANE SHALL BE RECESSED IN THE FLOOR SLAB WITH TOPPING POURED OVER IT. DRAINS INSTALLED IN ELEVATED BUILDING FLOORS SHALL BE SEALED IN SUCH A MANNER AS TO PREVENT LEAKAGE OF WATER AROUND TRAP AND BODY TO CEILING BELOW.
I. ROOF DRAINS (RD): DRAIN SHALL CONSIST OF COATED CAST IRON BODY WITH NON-PUNCTURING FLUSHING CLAMP WITH INTEGRAL GRAVEL STOP AND DECK CLAMP. DRAIN SHALL HAVE AN ADJUSTABLE EXTENSION TO PLACE FLASHING CLAMP ABOVE INSULATION WHILE BODY RESTS ON THE ROOF STRUCTURE. PROVIDE WITH ALUMINUM ROOF DOME. PROVIDE 1710 EXPANSION JOINT IF PIPING IS NOT OFFSET BELOW THE ROOF. DRAIN SHALL BE JAY R. SMITH 1015Y-R-C-AD OR EQUAL BY WADE, JOSAM, OR ZURN. ROOF DRAINS SHALL BE INSTALLED IN ACCORDANCE WITH MANUFACTURER'S INSTRUCTIONS. COORDINATE THE WORK WITH ROOF DECK AND ROOFING CONTRACTOR TO INSURE PROPER AND TIMELY INSTALLATION.
J. OVERFLOW DRAINS (OD): DRAIN SHALL CONSIST OF COATED CAST IRON BODY WITH NON-PUNCTURING FLASHING CLAMP, TWO (2) INCH WATER DAM, AND DECK CLAMP. PROVIDE ALUMINUM ROOF DOME. PROVIDE 1710 EXPANSION JOINT IF PIPING IS NOT OFFSET BELOW ROOF. DRAIN SHALL BE J.R. SMITH 1080Y-R-C-AD OR EQUAL BY WADE, JOSAM, OR ZURN. OVERFLOW DRAINS SHALL BE INSTALLED IN ACCORDANCE WITH MANUFACTURER'S INSTRUCTIONS. COORDINATE THE WORK WITH ROOF DECK AND ROOFING CONTRACTOR TO INSURE PROPER AND TIMELY INSTALLATION.
K. DOWNSPOUT NOZZLES: WALL MOUNTED OUTLET NOZZLE FOR STORM DRAINAGE, PLAIN BRONZE BODY, DECORATION FACE OF WALL AND FLANGE, WITH SCREEN AND THREADED CONNECTOR. UNITS SHALL BE JAY R SMITH 1770-BS OR EQUAL BY ZURN, WADE, OR JOSAM.
L. HUB DRAIN (HD): DRAIN SHALL INCLUDE CAST IRON DEEP SEAL "P" TRAP WITH INDIRECT WASTE FUNNEL INLET AND SIDE OUTLET THREADED AND WITH ½ INCH THREADED FLUSH CONNECTION. DRAIN SHALL BE JOSAM 8821-051 OR EQUAL BY ZURN, JAY R. SMITH, OR WADE.
M. REDUCED PRESSURE ZONE BACKFLOW PREVENTER (ASSE 1015): BACKFLOW PREVENTER SHALL INCLUDE NPT BODY CONNECTIONS, QUARTER TURN, FULL PORT, RESILIENT SEATED BRONZE BALL VALVE, AND STRAINER. UNIT SHALL BE WATTS SERIES 909 QT OR EQUAL BY WILKINS, OR CONBRACO. BACKFLOW PREVENTERS SHALL BE INSTALLED IN ACCORDANCE WITH PER MANUFACTURER'S INSTRUCTIONS. AFTER INSTALLATION, BUT BEFORE SYSTEM IS PUT INTO SERVICE, TEST BACKFLOW PREVENTER FOR FUNCTIONALITY WITH TEST KIT AS RECOMMENDED BY MANUFACTURER. PIPE DISCHARGE FROM BACKFLOW PREVENTER VENT WITH CONNECTION-SIZE COPPER TUBING TO NEAREST FLOOR DRAIN. ENSURE AIR GAP IS PROVIDED IN RELIEF LINE EITHER BY AIR GAP FITTING OR ELEVATED DISCHARGE ABOVE DRAINS. BACKFLOW PREVENTER PIPING SHALL BE INSTALLED WITH UNIONS FOR REMOVAL.
N. WALL HYDRANTS (WH-1): WALL HYDRANTS SHALL BE NICKEL BRONZE PLATED, INTEGRAL VACUUM BREAKER, 3/4 INCH HOSE THREAD, KEY OPERATOR, NON-FREEZE TYPE, HOUSED IN A RECESSED STAINLESS STEEL BOX WITH HINGED LOCKING COVER. HYDRANT SHALL BE JAY R. SMITH 5509 QT OR EQUAL BY WADE, JOSAM OR ZURN. INSTALL WALL HYDRANTS AS INDICATED ON DRAWINGS, MINIMUM HEIGHT 18" A.F.F. UNLESS OTHERWISE INDICATED.
O. HOSE BIBB (HB-1): CHROME PLATED, ¾ INCH HOSE THREAD OUTLET, LOCK SHIELD CAP WITH INTEGRAL VACUUM BREAKER. CHICAGO FAUCET NO. 952 OR T&S BRASS.
P. THERMOSTATIC MIXING VALVES: MIXING VALVE SHALL BE THERMOSTATIC TYPE WITH LIQUID FILLED MOTOR AND LEAD-FREE BRONZE BODY CONSTRUCTION WITH REPLACEABLE CORROSION RESISTANT COMPONENTS. VALVE CONSTRUCTION SHALL BE SLIDING PISTON CONTROL MECHANISM. PISTON AND LINER SHALL BE OF STAINLESS STEEL MATERIAL. VALVES SHALL BE EQUIPPED WITH REMOVABLE UNION END STOP AND CHECK INLETS WITH STAINLESS STEEL STRAINERS. VALVE SHALL PROVIDE PROTECTION FROM HOT AND COLD SUPPLY LINE FAILURE AND THERMOSTAT FAILURE. PROVIDE WITH DIAL THERMOMETER AND SHUT OFF VALVE ON TEMPERED WATER OUTLET. MIXING VALVE SHALL BE LAWLER 800 SERIES OR EQUAL BY HOLBY, SYMMONS, LEONARD, OR WATTS. INSTALL IN ACCORDANCE WITH MANUFACTURER'S INSTRUCTIONS.
Q. OIL SEPARATOR: STRIEM HIGH EFFICIENCY OIL/WATER SEPARATOR MODEL OS-25 SHALL BE LIFETIME GUARANTEED AND MADE IN THE USA. SEPARATOR SHALL BE CERTIFIED TO IAPMO IGC 325 AND CARRY A UPC LISTING. SEPARATOR SHALL BE CONSTRUCTED OF POLYETHYLENE. SEPARATOR SHALL BE MANUFACTURED FOR ABOVE- OR BELOW-GRADE INSTALLATION. FIELD ADJUSTABLE RISER SYSTEM IS AVAILABLE AS AN OPTION TO BRING MANHOLE COVER TO GRADE. SEPARATOR FLOW RATE SHALL BE 25 GPM. SEPARATOR LIQUID HOLDING CAPACITY SHALL BE 21 GALLONS AND OIL CAPACITY SHALL BE 5.25 GALLONS. SOLIDS CAPACITY SHALL BE 6 GALLONS. COVER SHALL PROVIDE WATER/GAS-TIGHT SEAL AND HAVE A MAXIMUM 450 LBS. LOAD CAPACITY WHEN UNIT IS INSTALLED ABOVE-GRADE, AND 2,500 LBS. WHEN BURIED WITH SR16 RISER.

SECTION 15440 - PLUMBING FIXTURES

A. THIS SPECIFICATION DESCRIBES THE REQUIREMENTS FOR PLUMBING FIXTURES AND THEIR INSTALLATION.
B. SUBMITTALS SHALL INCLUDE MANUFACTURER'S DATA SHEETS AND DIMENSIONAL INFORMATION ON ALL FIXTURES AND ACCESSORIES. FORMAT SHALL INCLUDE A SCHEDULE OF THE FIXTURES SUBMITTED AND INCLUDE IDENTIFICATION NUMBER OF EACH ITEM, SUCH AS "P-1 WATER CLOSET", AND LIST OF EACH COMPONENT AND ACCESSORY OF THE FIXTURE, INCLUDING MANUFACTURER'S MODEL NUMBER. THIS SCHEDULE MUST BE INCLUDED IN THE FRONT OF THE SUBMITTAL BOOKLET.
C. VITREOUS WARE SHALL BE WHITE, REGULAR SECTION, OF WEIGHT REQUIRED, FREE FROM CRACKS, FLAWS, BLISTERS, CRAZES OR OTHER DEFECTS. PROVIDE WITH MOUNTING BRACKETS FOR WALL MOUNTED FIXTURES UNLESS FLOOR CARRIERS ARE INDICATED.
D. STAINLESS STEEL SHALL HAVE MACHINE GROUND FINISH. DECKS AND SINK COMPARTMENT SIDES SHALL BE BUFFED. EXPOSED SURFACES SHALL HAVE NO. 4 SATIN FINISH. INTERIOR SURFACES SHALL BE DEADENED. EXPOSED METAL PARTS SHALL BE CHROMIUM PLATED AND PROTECTED DURING CONSTRUCTION BY A COAT OF GREASE.
E. WATER CLOSET AND URINAL CARRIERS SHALL HAVE TAPERED THREAD FACE PLATE, PLASTIC COUPLING WITH TEST CAP, AND NEOPRENE RUBBER GASKET. LAVATORY, SINK AND URINAL CARRIERS SHALL HAVE RECTANGULAR STRUCTURAL STEEL UPRIGHTS. CARRIERS SHALL HAVE NECESSARY ACCESSORIES FOR PROPER INSTALLATION. CARRIERS SHALL BE ACCORDING TO ANSI A112.6.1M.
F. WATER CLOSETS AND URINALS SHALL HAVE BOLT CAPS.
G. SEATS SHALL BE WHITE, SOLID PLASTIC, WITH INTERNAL CHECK AND MOLDED STAINLESS STEEL HINGE WITHOUT VISIBLE METAL PARTS, EXCEPT AS HEREINAFTER SPECIFIED.
H. CHROMIUM PLATED TRAPS SHALL BE BRASS WITH CHROMIUM PLATED NIPPLE TO WALL AND ESCUTCHEON.
I. FITTINGS AND ACCESSORIES SPECIFIED DESIGNATE TYPE ONLY; PROVIDE MODIFICATIONS TO MAKE FITTINGS WORK PROPERLY WITH FIXTURE AND PIPING. PROVIDE NECESSARY TAILPIECE AND SHANKS.
J. INSTALL EYEWASH STATION WITHIN 10 FEET OF HAZARD AREA, COMPLETELY UNOBSTRUCTED FROM VIEW OR ACCESS. ANCHOR TO FLOOR IN ACCORDANCE WITH MANUFACTURER'S REQUIREMENTS. PROVIDE AND INSTALL STRAINER AT DOMESTIC WATER INLET TO STATION. PROVIDE AND INSTALL ON WALL ABOVE STATION, A PLASTIC ENGRAVED SIGN READING "EMERGENCY USE ONLY", WHITE LETTERS ON RED BACKGROUND. PROVIDE MINIMUM 5 GALLON CONTAINER AND PROVIDE TIMED FLOW TEST FOR ALL EYEWASHES AND EMERGENCY SHOWERS. SUBMIT REPORT TO ARCHITECT OR ENGINEER PRIOR TO FINAL INSPECTION.

K. FIXTURES

WC-1 WATER CLOSET (17-1/2" HIGH, FLOOR MOUNT, TANK TYPE):
1. KOHLER K-43979 VITREOUS CHINA, 1.6 GALLON FLUSH; CLOSE COUPLED TANK WITH ELONGATED BOWL.
2. KOHLER K-7637 3/8" POLISHED CHROME ANGLE SUPPLY WITH STOP.
3. BENEKE 527SS ELONGATED SELF-SUSTAINING WITH CHECK HINGES, OPEN FRONT, HEAVY DUTY SOLID PLASTIC SEAT.

LAV-1 LAVATORY (ADA COMPLIANT, WALL HUNG):
1. AMERICAN STANDARD DECLYN WALL-HUNG LAVATORY, VITREOUS CHINA, WITH OVER FLOW AND 4" FAUCET CENTERS, DRILLED FOR CONCEALED ARM CARRIER.
2. ZURN Z-7443-VP SINGLE CONTROL FAUCET, LEVER HANDLE, 4" CENTER MOUNT, 1-1/4" GRID STRAINER.
3. MCGUIRE 170 1/2" X 3/8" SWEAT LAVATORY SUPPLIES WITH WHEEL HANDLE STOPS.
4. MCGUIRE 8902, 1-1/4 INCH X 1-1/2 INCH P-TRAP WITH ESCUTCHEON; ZURN GH, 1-1/4" OFFSET HANDICAP GRID DRAIN.
5. TRAP AND SUPPLIES COVERED WITH TRAP WRAP EQUAL TO BROCHAR INDUSTRIES.
6. ZURN Z-1231 LAVATORY CONCEALED ARM CARRIER.

EW-1 EYE/FACE WASH (PEDESTAL MOUNT):
1. STAINLESS STEEL BOWL WITH TWIN EYEWASH HEADS WITH FLIP TOP COVERS, CHROME PLATED WATER EYEWASH ASSEMBLY.
2. INCLUDE UNIVERSAL EMERGENCY SIGN CONFORMING TO ANSI Z535.1.
3. INCLUDE MIXING VALVE/TEMPERED WATER BLENDING SYSTEM.
4. EQUAL TO GUARDIAN G1825. CONFORM TO ANSI Z358.1.

EWC-1 WATER COOLER (WALL MOUNT, BOTTLE FILLING STATION, ADA):
1. ELKAY LZSTL8WSVRSK. HANDS FREE, ADA COMPLIANT DUAL STATION WITH BOTTLE FILLING STATION.
2. MCGUIRE 8902 P-TRAP WITH ESCUTCHEON.
3. MCGUIRE 170 STOP AND SUPPLY.

SK-1 LAUNDRY TUB (SINGLE COMPARTMENT):
1. FIAT MODEL NO. FL-1 SINGLE MOLDED STONE LAUNDRY TUB WITH FREE DRAINING SOAP TRAY ON BACK LEDGE. INCLUDE FOUR WHITE BAKED ENAMEL ANGLE LEGS THAT SLIP INTO MOLDED SOCKETS. SELF-LEVELING LEGS WITH FLOOR ANCHORS.
2. FIAT MODEL A-1 BRASS FAUCET WITH SWING SPOUT.
3. MCGUIRE 170 1/2" X 3/8" SWEAT LAVATORY SUPPLIES WITH WHEEL HANDLE STOPS.
4. MCGUIRE #150 TRAY PLUG WITH RUBBER STOPPER (1-1/2").
5. MCGUIRE #8912 1-1/2" X 1-1/2", 17 GAUGE BRASS P-TRAP.

CMVB COFFEE MAKE VALVE BOX:
1. GUY GRAY MODEL BIM 875.
2. 1/2" FIP x 1/4" O.D. OUTLET COMPRESSION ANGLE VALVE.
3. BOX IS 16 GAUGE STEEL WITH EPOXY FINISH.

L. ACCEPTABLE MANUFACTURERS: FIXTURES, VITREOUS CHINA - AMERICAN STANDARD, CRANE, ELJER, KOHLER FIXTURES, STAINLESS STEEL - JUST, ELKAY FLUSH VALVES - SLOAN, DELANEY, ZURN TOILET SEATS - OLSONITE, SPERZEL, CHURCH, BENEKE, BEMIS FAUCETS - T&S BRASS, SPEAKMAN, CHICAGO, SYMMONS, ELJER TERRAZZO - FIAT, CUTLER, FLORESTONE, STERN-WILLIAMS TRIM, CHROMED BRASS - MCGUIRE, SANITARY DASH, BRIDGEPORT SHOWER MIXING VALVES - POWERS, LEONARD, LAWLER, SYMMONS, SPEAKMAN, ZURN SHOWER HEADS - SYMMONS, SPEAKMAN, ZURN ELECTRIC WATER COOLERS - ELKAY, HALSEY TAYLOR, SUNROC, OASIS, HAWS. USE ONLY WATER COOLERS WHICH DO NOT USE CFC'S FOR REFRIGERATION. SCRUB SINKS - ELJER, AMERICAN STANDARD, KOHLER, CRANE CARRIERS - J. R. SMITH, JOSAM, ZURN, WADE EMERGENCY EQUIPMENT - GUARDIAN, HAWS, WESTERN, SPEAKMAN

M. INSTALL PLUMBING FIXTURE LEVEL AND PLUMB, IN ACCORDANCE WITH FIXTURE MANUFACTURER'S PUBLISHED LITERATURE, ROUGH-IN DRAWINGS, CODES REGULATIONS, AND REFERENCE STANDARDS. FASTEN PLUMBING FIXTURES SECURELY TO SUPPORTS OR BUILDING STRUCTURE. RIGIDLY SUPPORT WATER SUPPLIES BEHIND OR WITHIN WALL CONSTRICTION. PROVIDE STOP VALVE IN THE WATER SUPPLY TO EACH FIXTURE IN AN ACCESSIBLE LOCATION. CONNECT WALL HUNG URINALS TO WASTE PIPING WITH RED BRASS NIPPLES. CONNECT FIXTURES TO WATER SUPPLY WITH COPPER OR BRASS (NO STEEL). EACH FIXTURE, FLOOR DRAIN AND PIECE OF EQUIPMENT REQUIRING CONNECTION TO DRAINAGE SYSTEM TO HAVE SEPARATE TRAPS INSTALLED AS CLOSE TO FIXTURE AS POSSIBLE. PROVIDE IRON OR STEEL BACKING FOR ALL WALL MOUNTED FIXTURES (OR WOOD BACKING ONLY IF BUILDING STRUCTURE IS WOOD). PROVIDE ESCUTCHEONS AT EACH WALL, FLOOR AND CEILING PENETRATION IN EXPOSED FINISHED LOCATIONS AND WITHIN CABINETS AND MILLWORK. APPLY SCP3154 PRIMER AND GENERAL ELECTRIC CO.'S NO. 1702 SILICONE SANITARY SEALANT AROUND PLUMBING FIXTURES TO CONCEAL VOIDS AT WALL AND CONTACT POINTS OF FIXTURE AFTER WALLS HAVE BEEN PAINTED. APPLY SCP3154 PRIMER AND GENERAL ELECTRIC CO.'S SILPRUF SEALANT ON PLAIN CONCRETE WALLS.

SECTION 15450 - PLUMBING EQUIPMENT

A. ELECTRIC WATER HEATERS:
1. WATER HEATER SHALL COMPLY WITH UL 1453.
2. STORAGE TANK CONSTRUCTION: ASME-CODE STEEL WITH 150 PSIG WORKING-PRESSURE RATING. STEEL JACKET WITH ENAMELED FINISH.
3. TAPPINGS: FACTORY FABRICATED OF MATERIALS COMPATIBLE WITH TANK FOR PIPING CONNECTIONS, RELIEF VALVE, PRESSURE GAGE, THERMOMETER, DRAIN, ANODE RODS, AND CONTROLS AS REQUIRED. ATTACH TAPPINGS TO TANK SHELL BEFORE TESTING AND LABELING. TAPPINGS SHALL HAVE THREADED ENDS ACCORDING TO ASME B1.20.1, PIPE THREADS.
4. INTERIOR FINISH: MATERIALS AND THICKNESSES COMPLYING WITH NSF 61, BARRIER MATERIALS FOR POTABLE-WATER TANK LININGS. EXTEND FINISH INTO AND THROUGH TANK FITTINGS AND OUTLETS.
5. INSULATION: COMPLY WITH ASHRAE 90.1. SURROUND ENTIRE STORAGE TANK EXCEPT CONNECTIONS AND CONTROLS.
6. HEATING ELEMENTS: ELECTRIC, SCREW-IN OR BOLT-ON, IMMERSION TYPE. STAGING AS NOTED IN SCHEDULE.
7. TEMPERATURE CONTROL: ADJUSTABLE IMMERSION THERMOSTAT.
8. SAFETY CONTROLS: AUTOMATIC, HIGH-TEMPERATURE-LIMIT AND LOW-WATER CUTOFF DEVICES OR SYSTEMS.
9. DRAIN VALVE: ASSE 1005, CORROSION-RESISTANT METAL, FACTORY INSTALLED.
10. ANODE RODS: FACTORY INSTALLED, MAGNESIUM.
11. DIP TUBE: FACTORY INSTALLED. NOT REQUIRED IF COLD-WATER INLET IS NEAR BOTTOM OF STORAGE TANK.
12. SPECIAL REQUIREMENT: NSF 5 CONSTRUCTION.
13. ACCEPTABLE MANUFACTURERS ARE LOCHINVAR, A. O. SMITH, OR PRIOR APPROVAL EQUAL.

B. THERMAL EXPANSION TANK (DOMESTIC WATER):
1. PRE-CHARGED HYDROPNEUMATIC STEEL EXPANSION TANK, CONSTRUCTED IN ACCORDANCE WITH SECTION VIII OF ASME BOILER AND PRESSURE CODE, WITH ALL WELDS CONFORMING TO ASME SECTION IX. TANK MUST BE STAMPED WITH A MAXIMUM WORKING PRESSURE OF 125 PSI, AND A MAXIMUM WORKING TEMPERATURE OF 200 DEGREES F. ALL INTERNAL WETTED PARTS MUST COMPLY WITH FDA REGULATIONS AND APPROVALS. AN INTERNAL BUTYL DIAPHRAGM WILL BE USED TO ISOLATE AIR FROM WATER. AMTROL OR APPROVED EQUAL AST SERIES.

Pinnacle ENGINEERING, INC
Engineering & Design Consultants
2031 Shady Crest Dr
Birmingham, AL 35216
(205) 733-6912 FAX: (205) 733-6913
Job No.26152

AHO ARCHITECTS, LLC
www.ahoarch.com

STATE OF TEXAS
JAMES HOGLAND, JR.
93348
PROFESSIONAL ENGINEER
8/12/26

Express Oil Change & Tire Engineers
Single Building / Right Hand Oil Change / Rear Enter / Side Tire Storage
Cross Roads, Texas (Aubrey)

FINAL

No.	Description	Date
IFP-0	Issued for Permit	06/30/26
IFB-0	Iss. fo Bid/AHJ Rev.	08/12/2026

© 2026 Aho Architects, LLC. All Rights Reserved.

Plumbing Specifications

Project number	26013
Date	06/30/2026
Drawn by	CA
Checked by	JB

P0.03

Scale 12" = 1'-0"

9/1/2026 1:09:26 PM

Pinnacle ENGINEERING, INC.
Engineering & Design Consultants
2031 Shady Crest Dr
Birmingham, AL 35216
(205) 733-6912 FAX: (205) 733-6913
Job No.26152

AHO ARCHITECTS, LLC
www.ahoarch.com

STATE OF ALABAMA
JAMES BRYAN HOLT
03348
8/12/26

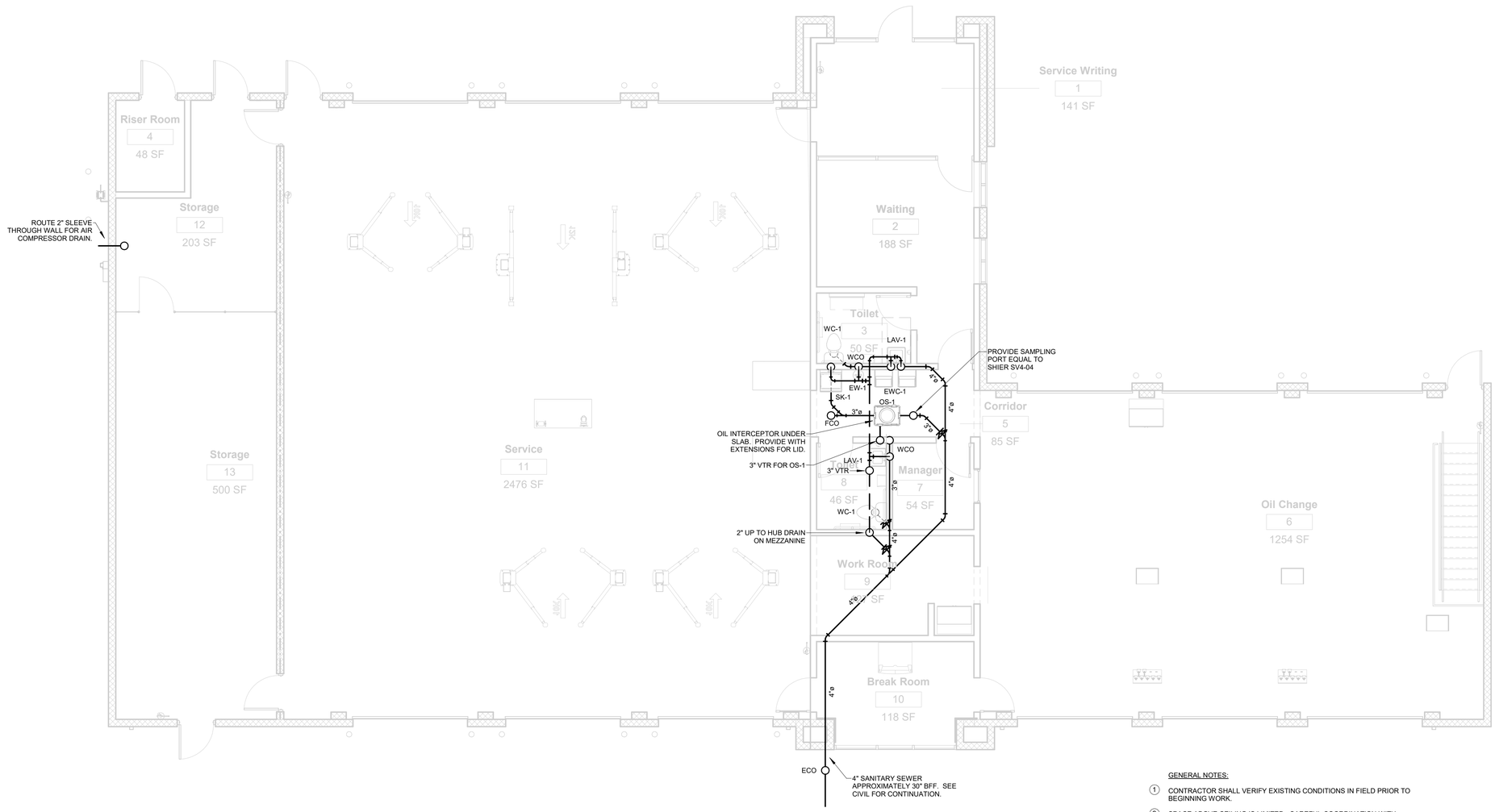

NORTH

MAIN FLOOR PLAN
PLUMBING - GRAVITY
3/16" = 1'-0"

GENERAL NOTES:

1. CONTRACTOR SHALL VERIFY EXISTING CONDITIONS IN FIELD PRIOR TO BEGINNING WORK.
2. SPACE ABOVE CEILING IS LIMITED. CAREFUL COORDINATION WITH LIGHTING, ELECTRICAL, MECHANICAL, FIRE PROTECTION, STRUCTURAL AND ARCHITECTURAL WORK IS CRITICAL FOR COMPLETE PIPING INSTALLATION. CONTRACTOR SHALL PROVIDE NECESSARY OFFSETS IN NEW AND EXISTING PIPING AND ELECTRICAL CONDUIT AS REQUIRED TO ACCOMMODATE NEW WORK. CONTRACTOR SHALL ALLOW FOR ANY CONFLICTS ENCOUNTERED.
3. PIPING LAYOUTS ARE DIAGRAMMATIC AND DO NOT SHOW ALL ELEMENTS OF CONSTRUCTION. CONTRACTOR SHALL BE RESPONSIBLE FOR ALL CHANGES ON DIRECTION, ELEVATION AND MINOR OFFSETS NECESSARY FOR COMPLETE INSTALLATION OF ELEMENTS SHOWN.
4. ALL WASTE PIPING SHOWN IS BELOW FINISHED FLOOR UNLESS OTHERWISE NOTED. ALL VENT PIPING SHOWN IS ABOVE CEILING UNLESS OTHERWISE NOTED.
5. REFER TO ARCHITECTURAL REFLECTED CEILING PLANS FOR LOCATIONS OF ALL CEILING MOUNTED DEVICES. REFER TO ARCHITECTURAL FLOOR PLANS FOR ALL DIMENSIONS.
6. COORDINATE ACCESS DOOR LOCATIONS WITH GENERAL CONTRACTOR AND ARCHITECT.

Express Oil Change & Tire Engineers

Single Building / Right Hand Oil Change / Rear Enter / Side Tire Storage

Cross Roads, Texas (Aubrey)

FINAL

No.	Description	Date
IFP-0	Issued for Permit	06/30/26
IFB-0	Iss. fo Bid/AHJ Rev.	08/12/2026

© 2026 Aho Architects, LLC. All Rights Reserved.

Plumbing Floor Plan Gravity

Project number	26013
Date	06/30/2026
Drawn by	CA
Checked by	JB

P1.01

Scale As indicated

9/1/2026 1:09:26 PM

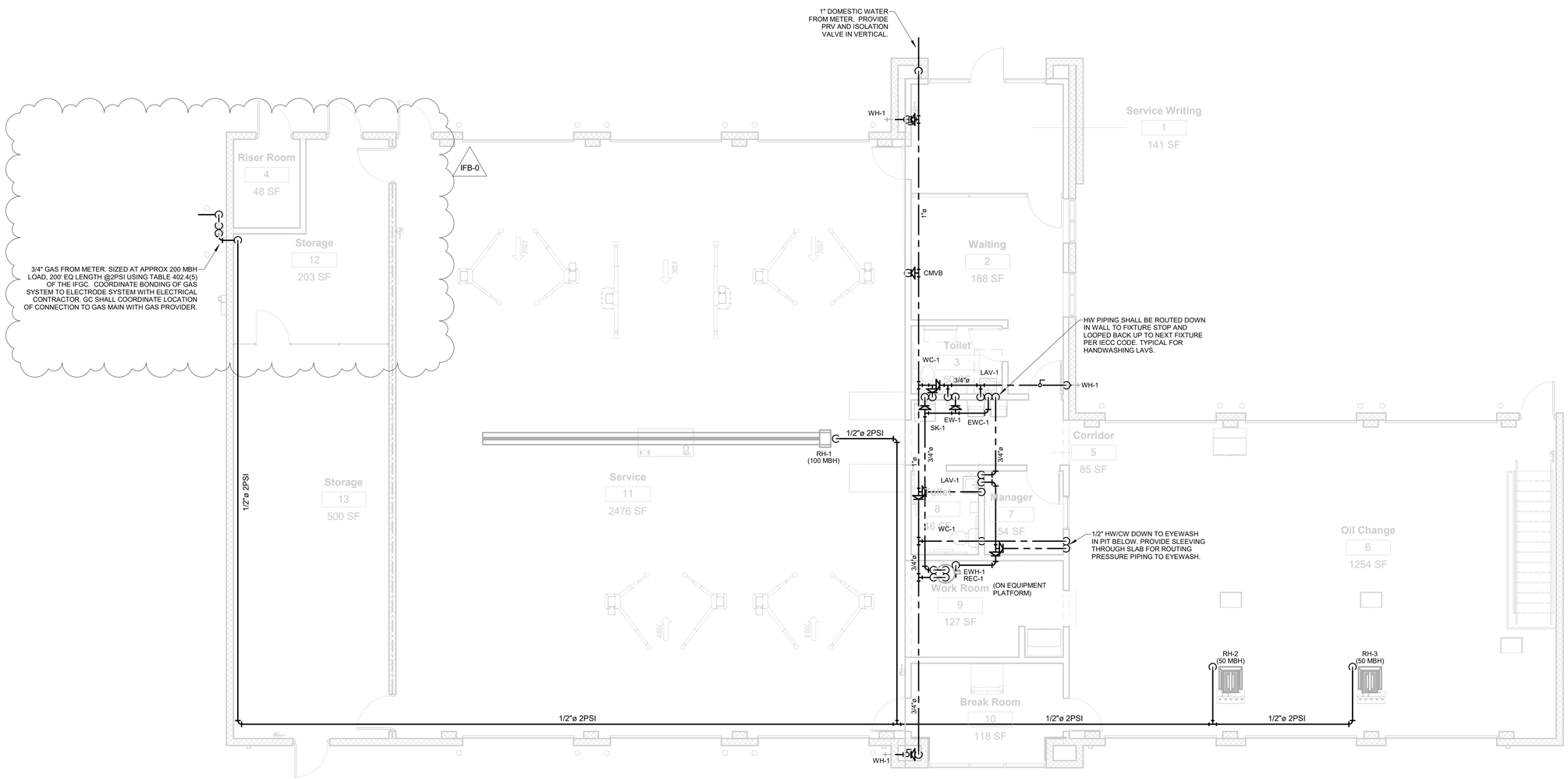

MAIN FLOOR PLAN
PLUMBING - PRESSURE
3/16" = 1'-0"

NORTH

GENERAL NOTES:

1. CONTRACTOR SHALL VERIFY EXISTING CONDITIONS IN FIELD PRIOR TO BEGINNING WORK.
2. SPACE ABOVE CEILING IS LIMITED. CAREFUL COORDINATION WITH LIGHTING, ELECTRICAL, MECHANICAL, FIRE PROTECTION, STRUCTURAL AND ARCHITECTURAL WORK IS CRITICAL FOR COMPLETE PIPING INSTALLATION. CONTRACTOR SHALL PROVIDE NECESSARY OFFSETS IN NEW AND EXISTING PIPING AND ELECTRICAL CONDUIT AS REQUIRED TO ACCOMMODATE NEW WORK. CONTRACTOR SHALL ALLOW FOR ANY CONFLICTS ENCOUNTERED.
3. PIPING LAYOUTS ARE DIAGRAMMATIC AND DO NOT SHOW ALL ELEMENTS OF CONSTRUCTION. CONTRACTOR SHALL BE RESPONSIBLE FOR ALL CHANGES ON DIRECTION, ELEVATION AND MINOR OFFSETS NECESSARY FOR COMPLETTE INSTALLATION OF ELEMENTS SHOWN.
4. ALL PRESSURE PIPING SHOWN IS ABOVE THE CEILING UNLESS OTHERWISE NOTED. ALL CONCEALED PIPING SHALL BE PEX-A OR COPPER. EXPOSED PIPING SHALL BE COPPER. LINES SHALL BE ½" UNLESS OTHERWISE NOTED.
5. REFER TO ARCHITECTURAL REFLECTED CEILING PLANS FOR LOCATIONS OF ALL CEILING MOUNTED DEVICES. REFER TO ARCHITECTURAL FLOOR PLANS FOR ALL DIMENSIONS.
6. COORDINATE ACCESS DOOR LOCATIONS WITH GENERAL CONTRACTOR AND ARCHITECT.

Pinnacle ENGINEERING, INC.
Engineering & Design Consultants
2031 Shady Crest Dr
Birmingham, AL 35216
(205) 733-6912 FAX: (205) 733-6913
Job No.26152

AHO ARCHITECTS, LLC
www.ahoarch.com

8/12/26

Express Oil Change & Tire Engineers

Single Building / Right Hand Oil Change / Rear Enter / Side Tire Storage

Cross Roads, Texas (Aubrey)

FINAL

No.	Description	Date
IFP-0	Issued for Permit	06/30/26
IFB-0	Iss. fo Bid/AHJ Rev.	08/12/2026

© 2026 Aho Architects, LLC.
All Rights Reserved.

Plumbing Floor Plan Pressure

Project number	26013
Date	06/30/2026
Drawn by	CA
Checked by	JB

P1.02

Scale As indicated

9/1/2026 1:09:27 PM

Pinnacle ENGINEERING, INC.
Engineering & Design Consultants
2031 Shady Crest Dr
Birmingham, AL 35216
(205) 733-6912 FAX: (205) 733-6913
Job No.26152

AHO ARCHITECTS, LLC
www.ahoarch.com

STATE OF ALABAMA
JAMES BRYAN HYDE
93348
8/12/26

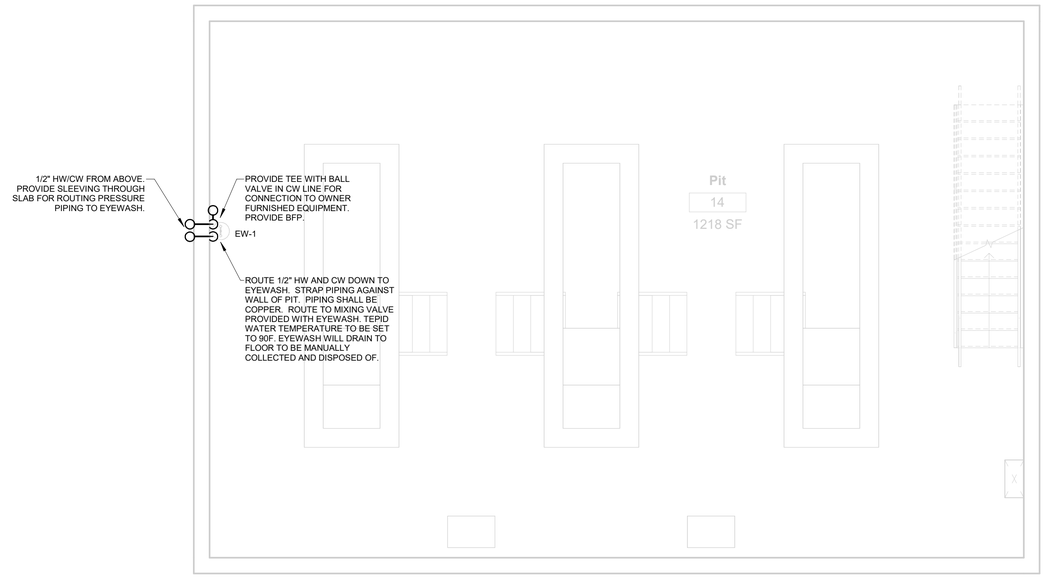

NORTH

PIT FLOOR PLAN PLUMBING
1/4" = 1'-0"

GENERAL NOTES:

1. CONTRACTOR SHALL VERIFY EXISTING CONDITIONS IN FIELD PRIOR TO BEGINNING WORK.
2. SPACE ABOVE CEILING IS LIMITED. CAREFUL COORDINATION WITH LIGHTING, ELECTRICAL, MECHANICAL, FIRE PROTECTION, STRUCTURAL AND ARCHITECTURAL WORK IS CRITICAL FOR COMPLETE PIPING INSTALLATION. CONTRACTOR SHALL PROVIDE NECESSARY OFFSETS IN NEW AND EXISTING PIPING AND ELECTRICAL CONDUIT AS REQUIRED TO ACCOMMODATE NEW WORK. CONTRACTOR SHALL ALLOW FOR ANY CONFLICTS ENCOUNTERED.
3. PIPING LAYOUTS ARE DIAGRAMMATIC AND DO NOT SHOW ALL ELEMENTS OF CONSTRUCTION. CONTRACTOR SHALL BE RESPONSIBLE FOR ALL CHANGES ON DIRECTION, ELEVATION AND MINOR OFFSETS NECESSARY FOR COMPLETTE INSTALLATION OF ELEMENTS SHOWN.
4. ALL PRESSURE PIPING SHOWN IS ABOVE THE CEILING UNLESS OTHERWISE NOTED. ALL CONCEALED PIPING SHALL BE PEX-A OR COPPER. EXPOSED PIPING SHALL BE COPPER. LINES SHALL BE ½" UNLESS OTHERWISE NOTED.
5. REFER TO ARCHITECTURAL REFLECTED CEILING PLANS FOR LOCATIONS OF ALL CEILING MOUNTED DEVICES. REFER TO ARCHITECTURAL FLOOR PLANS FOR ALL DIMENSIONS.
6. COORDINATE ACCESS DOOR LOCATIONS WITH GENERAL CONTRACTOR AND ARCHITECT.

Express Oil Change & Tire Engineers

Single Building / Right Hand Oil Change / Rear Enter / Side Tire Storage

Cross Roads, Texas (Aubrey)

FINAL

No.	Description	Date
IFP-0	Issued for Permit	06/30/26
IFB-0	Iss. fo Bid/AHJ Rev.	08/12/2026

© 2026 Aho Architects, LLC. All Rights Reserved.

Partial Plumbing Floor Plans - Pit and Platform

Project number	26013
Date	06/30/2026
Drawn by	CA
Checked by	JB

P1.03

Scale As indicated

9/1/2026 1:09:27 PM

Pinnacle
ENGINEERING, INC.
Engineering & Design Consultants
2031 Shady Crest Dr
Birmingham, AL 35216
(205) 733-6912 FAX: (205) 733-6913
Job No.26152

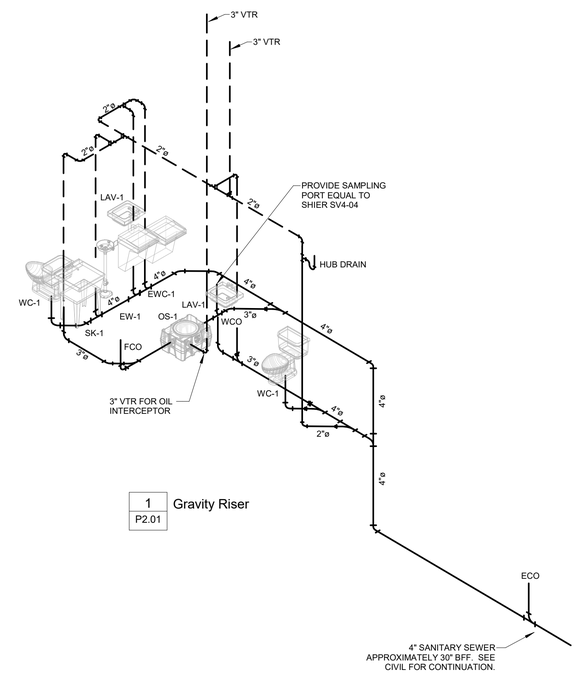

1
P2.01
Gravity Riser

AHO ARCHITECTS, LLC
www.ahoarch.com

STATE OF ALABAMA
AMY HYLTON
Registered
Architect
No. 03348
8/12/26

Express Oil Change & Tire Engineers

Single Building / Right Hand Oil Change / Rear Enter / Side Tire Storage

Cross Roads, Texas (Aubrey)

FINAL

No.	Description	Date
IFP-0	Issued for Permit	06/30/26
IFB-0	Iss. fo Bid/AHJ Rev.	08/12/2026

© 2026 Aho Architects, LLC.
All Rights Reserved.

Gravity Riser

Project number	26013
Date	06/30/2026
Drawn by	CA
Checked by	JB

P2.01

Scale

9/1/2026 1:09:29 PM

Pinnacle ENGINEERING, INC.
Engineering & Design Consultants
2031 Shady Crest Dr
Birmingham, AL 35216
(205) 733-6912 FAX: (205) 733-6913
Job No.26152

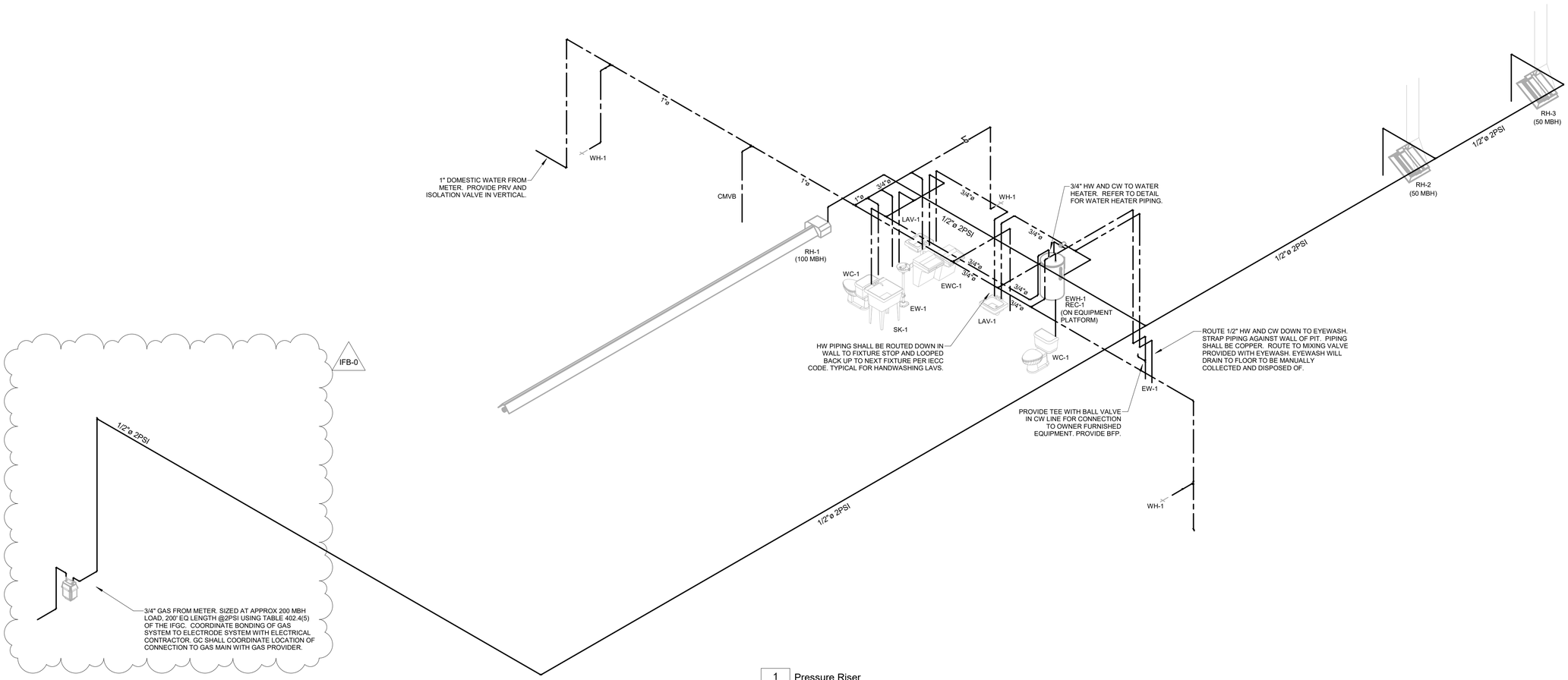

1 P2.02 Pressure Riser

AHO ARCHITECTS, LLC
www.ahoarch.com

STATE OF ALABAMA
JAMES BRYAN HYDEN
93345
8/12/26

Express Oil Change & Tire Engineers

Single Building / Right Hand Oil Change / Rear Enter / Side Tire Storage

Cross Roads, Texas (Aubrey)

FINAL

No.	Description	Date
IFP-0	Issued for Permit	06/30/26
IFB-0	Iss. fo Bid/AHJ Rev.	08/12/2026

© 2026 Aho Architects, LLC. All Rights Reserved.

Pressure Riser

Project number	26013
Date	06/30/2026
Drawn by	CA
Checked by	JB

P2.02

Scale

9/1/2026 1:09:28 PM

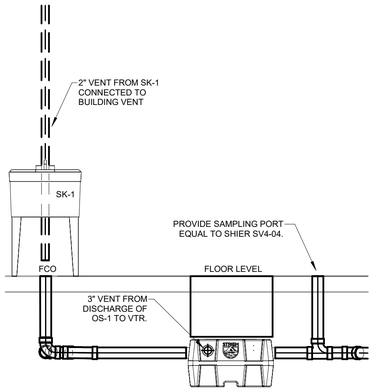

OIL INTERCEPTOR UNDER SLAB. PROVIDE WITH EXTENSIONS FOR LID. COORDINATE EXACT HEIGHT IN FIELD. EXCAVATE HOLE AND BACKFILL PER MANUFACTURER'S RECOMMENDATIONS

8 / P3.01 OIL INTERCEPTOR DETAIL
NO SCALE

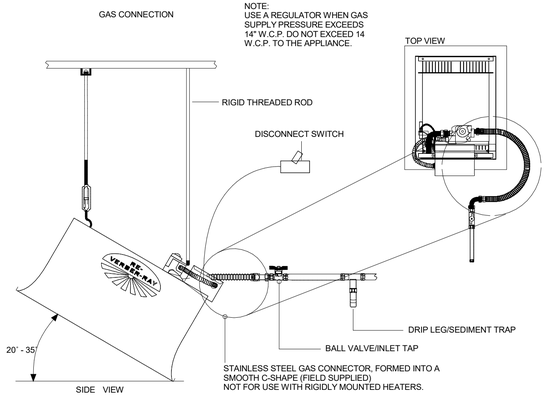

5 / P3.01 RADIANT HEATER GAS CONNECTION DETAIL
NO SCALE

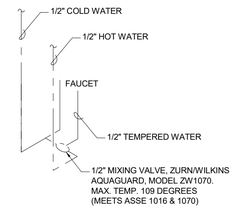

SINGLE

1 / P3.01 TYPICAL LAVATORY MIXING VALVE
SCALE: NONE

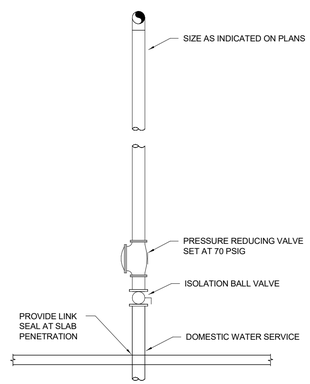

9 / P3.01 DOMESTIC WATER ENTRANCE DETAIL
NO SCALE

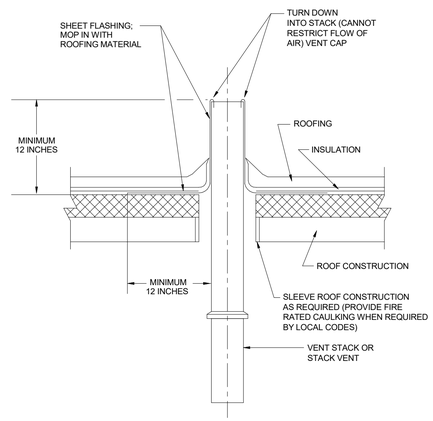

6 / P3.01 VENT THROUGH ROOF DETAIL
NO SCALE

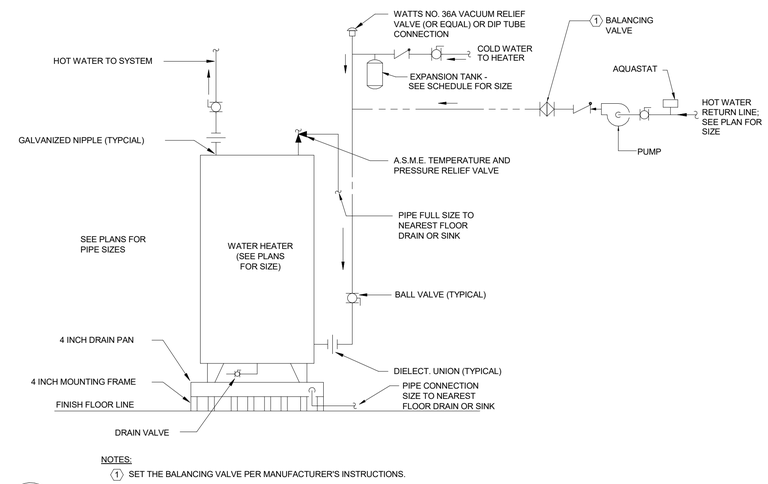

NOTES:
1 SET THE BALANCING VALVE PER MANUFACTURER'S INSTRUCTIONS.

2 / P3.01 ELECTRIC WATER HEATER (FLOOR MOUNTED)
NO SCALE

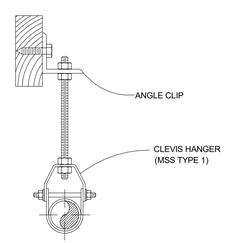

NOTES:
1) PIPE SUPPORT SPACING SHALL BE AT INTERVALS NOT GREATER THAN 8 FEET FOR 3/4" PIPE AND 6 FEET FOR 1/2" PIPE.

7 / P3.01 GAS PIPE HANGER DETAIL
NO SCALE

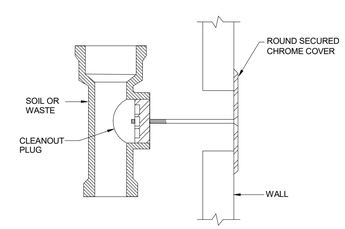

4 / P3.01 WALL CLEANOUT
NO SCALE

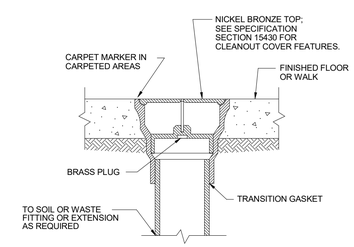

3 / P3.01 FLOOR CLEANOUT
NO SCALE

Pinnacle ENGINEERING, INC.
Engineering & Design Consultants
2031 Shady Crest Dr
Birmingham, AL 35216
(205) 733-6912 FAX: (205) 733-6913
Job No.26152

AHO ARCHITECTS, LLC
www.ahoarch.com

8/12/26

Express Oil Change & Tire Engineers
Single Building / Right Hand Oil Change / Rear Enter / Side Tire Storage
Cross Roads, Texas (Aubrey)

FINAL

No.	Description	Date
IFP-0	Issued for Permit	06/30/26
IFB-0	Iss. fo Bid/AHJ Rev.	08/12/2026

© 2026 Aho Architects, LLC.
All Rights Reserved.

Plumbing Details

Project number	26013
Date	06/30/2026
Drawn by	CA
Checked by	JB

P3.01

Scale 1/2" = 1'-0"

9/1/2026 1:09:43 PM

LIGHTING FIXTURE SCHEDULE

TYPE	MANUFACTURER	CATALOG NUMBER	LAMPS LAMP	LAMPS WATTS	LAMPS TYPE	MTG. TYPE	MTG. HT.	REC. DEPTH	DESCRIPTION	IMAGE
L1P	MAXLITE	BPHE3-U090WCS	LOT	90	LED	P	12' AFF	–	ROUND ECO PENDANT HIGH BAY GEN 3 FIXTURE WITH 12600 LUMEN OUTPUT, 4000K COLOR TEMPERATURE. PROVIDE ALL REQUIRED ACCESSORIES FOR HOOK AND CHAIN MOUNTING.	
	APPROVED EQUAL									
L2P	MAXLITE	LSV4U23WCSCR MLCHKLSV15	LOT	35	LED	P	*	–	4' LINEAR LED FIXTURE, PENDANT MOUNTED WITH ALUMINUM VAPOR TIGHT HOUSING, SELECTABLE WATTAGE, 4500 LUMEN OUTPUT, 4000K COLOR TEMPERATURE. PROVIDE ALL REQUIRED ACCESSORIES FOR SUSPENDED MOUNTING. SEE LIGHTING PLANS FOR LOCATIONS AND QUANTITIES. * VERIFY MOUNTING HEIGHT ABOVE FINISHED FLOOR PRIOR TO INSTALLATION.	
	APPROVED EQUAL									
L2	MAXLITE	LSV4U23WCSCR	LOT	35	LED	S	C	–	4' LINEAR LED FIXTURE, SURFACE MOUNTED WITH ALUMINUM VAPOR TIGHT HOUSING, SELECTABLE WATTAGE, 4500 LUMEN OUTPUT, 4000K COLOR TEMPERATURE. PROVIDE ALL REQUIRED ACCESSORIES FOR SURFACE MOUNTING. SEE LIGHTING PLANS FOR LOCATIONS AND QUANTITIES.	
	APPROVED EQUAL									
L3	MAXLITE	MLFP24G522WCSCR ML24G4CHK	LOT	38	LED	LI	C	–	2X4 LAY-IN LED FLAT PANEL FIXTURE WITH SELECTABLE WATTAGE, SELECTABLE COLOR TEMPERATURE, 4000 LUMEN OUTPUT, DIMMABLE DRIVER, UNIVERSAL VOLTAGE, FLANGE KIT, HANGING CABLES AND POLYSTYRENE LENS.	
	APPROVED EQUAL									
L3E	MAXLITE	MLFP24G522WCSCREM ML24G4CHK	LOT	38	LED	LI	C	–	2X4 LAY-IN LED FLAT PANEL FIXTURE WITH SELECTABLE WATTAGE, SELECTABLE COLOR TEMPERATURE, 4000 LUMEN OUTPUT, DIMMABLE DRIVER, UNIVERSAL VOLTAGE, FLANGE KIT, CABLE HANGERS, POLYSTYRENE LENS. AND EMERGENCY BATTERY PACK.	
	APPROVED EQUAL									
L4	MAXLITE	M55UC4W-CSBWCR M-VCLV2	LOT	38	LED	W	10'AFF	–	FIXED WALL MOUNTED LED FIXTURE WITH BLACK FINISH, DIE-CAST ALUMINUM HOUSING, SELECTABLE COLOR TEMPERATURE, 3512 LUMEN OUTPUT, WIDE DISTRIBUTION. UL LISTED FOR WET LOCATION. NOTE 3.	
	APPROVED EQUAL									
L4E	MAXLITE	M55UC4W-CSBWCRE2 M-VCLV2	LOT	38	LED	W	10'AFF	–	FIXED WALL MOUNTED LED FIXTURE WITH BLACK FINISH, DIE-CAST ALUMINUM HOUSING, SELECTABLE COLOR TEMPERATURE, 3512 LUMEN OUTPUT, WIDE DISTRIBUTION, ELECTRONIC DRIVER, AND EMERGENCY BATTERY PACK. UL LISTED FOR WET LOCATION. NOTE 3.	
	APPROVED EQUAL									
L5	PROVIDED BY GENERAL CONTRACTOR		FURNISHED WITH UNIT			R	C	–	RECESSED LED DOWNLIGHT WITH 4000K COLOR TEMPERATURE, 3000 LUMEN OUTPUT, AND EMERGENCY BATTERY PACK. UL LISTED FOR WET LOCATION. FIXTURES ARE PROVIDED BY GENERAL CONTRACTOR AS PART OF THE METAL AWNING SYSTEM.	
	PROVIDED BY GENERAL CONTRACTOR									
	PROVIDED BY GENERAL CONTRACTOR									
S1	PROVIDED BY SIGN MANUFACTURER		FURNISHED WITH UNIT			W	NOTE 3	–	WALL MOUNTED LED SIGN LIGHTING FIXTURE. NOTE 2.	
	PROVIDED BY SIGN MANUFACTURER									
	PROVIDED BY SIGN MANUFACTURER									
S2	PROVIDED BY SIGN MANUFACTURER		FURNISHED WITH UNIT			W	NOTE 3	–	WALL MOUNTED LED LIGHT FIXTURE. NOTE 2.	
	PROVIDED BY SIGN MANUFACTURER									
	PROVIDED BY SIGN MANUFACTURER									
BL	MAXLITE	EMT-2WH	FURNISHED WITH UNIT			W	9'AFF	–	WALL MOUNTED TWO HEAD LED EMERGENCY FIXTURE WITH WHITE THERMOPLASTIC HOUSING, 1100 LUMEN OUTPUT, SELF DIAGNOSTICS, AND EMERGENCY BATTERY PACK.	
	APPROVED EQUAL									
XL	MAXLITE	EXT-GW	FURNISHED WITH UNIT			W	AD	–	WHITE THERMOPLASTIC LED EXIT SIGN WITH SINGLE FACE, GREEN LETTERS, UNIVERSAL MOUNTING, SELF DIAGNOSTICS, AND EMERGENCY BATTERY PACK.	
	APPROVED EQUAL									

ABBREVIATIONS: LI–LAY–IN C–CEILING LG–LENS GASKETING GMF–INTERNAL SLOW BLOW FUSE FL–FLUORESCENT MH–METAL HALIDE HO–HIGH OUTPUT
AFF–ABOVE FINISH FLOOR P–PENDENT FC–FROM CEILING R–RECESSED AM–ABOVE MIRROR W–WALL AD–ABOVE DOOR
S–SURFACE DTT–DOUBLE TWIN TUBE FLUORESCENT CA–CANOPY TC–TOP OF METAL CANOPY AW–ABOVE WINDOW VA–VERIFY WITH ARCHITECT

LIGHTING FIXTURE SCHEDULE GENERAL NOTES:

1. FIXTURE OUTLET BOX LOCATIONS SHOWN ON THE DRAWINGS ARE DIAGRAMMATIC AND APPROXIMATE IN LOCATION. EXACT POSITION OF THE OUTLET BOX SHALL DEPEND ON THE FIXTURE AND THE MOUNTING DETAIL.
2. MOUNTING AND SUPPORT DETAILS FOR LIGHTING FIXTURES SHALL BE SUBMITTED TO AND APPROVED BY THE ENGINEER BEFORE THE FIXTURES ARE INSTALLED. NO COMBUSTIBLE MATERIALS SHALL BE USED.
3. WET LOCATION FIXTURES SHALL BE MOUNTED IN ACCORDANCE WITH THE MANUFACTURER'S RECOMMENDATION SO AS TO ENSURE THE PREVENTION OF MOISTURE FROM ENTERING THE FIXTURE. IN ADDITION, EACH CONDUIT ENTRY WILL BE SEALED BY USE OF AN APPROVED SWEDGE FITTING WITH A NEOPRENE SEAL, AS MANUFACTURED BY JOHN REMKE COMPANY OR APPROVED EQUAL.
4. OUTLET BOXES SERVING WET LOCATION FIXTURE SHALL BE CODE SIZE, WITH A WATERTIGHT SOLID CAST TOP. CONDUIT ENTRIES SHALL BE THREADED.
5. FIXTURE MOUNTING HEIGHTS IN SCHEDULE ARE TYPICAL UNLESS NOTED OTHERWISE ON DRAWINGS.
6. FOR LIGHTING PACKAGE PRICING, CONTACT THE FOLLOWING:

   MIKE MCMAKEN
   REXEL ENERGY SOLUTIONS
   (M) 906–235–2979
   MIKE.MCMAKEN@REXELENERGY.COM

   STEPHEN MITCHELL
   MAXLITE
   (M) 908–256–3115
   SMITCHELL@MAXLITE.COM

LIGHTING FIXTURE SCHEDULE NOTES:

1. SEE MOUNTING DETAIL ON THIS SHEET FOR MORE INFORMATION.
2. INSTALLED BY SIGN COMPANY.
3. VERIFY MOUNTING HEIGHT WITH SIGN COMPANY BEFORE ROUGHING IN.
4. FIXTURE SHALL BE MOUNTED SO THAT THE TOP OF THE FIXTURE IS AT 12' AFF TO ALIGN WITH BANDING ON EXTERIOR OF BUILDING.

GENERAL NOTES:

1. VERIFY ALL DOOR SWINGS WITH ARCHITECTURAL BEFORE ROUGHING IN LIGHT SWITCHES TO ENSURE PROPER SWITCH LOCATION. VERIFY ALL CASEWORK DETAILS TO ENSURE THAT ALL OUTLETS ABOVE CASEWORK ARE AT THE PROPER HEIGHT.
2. SERVICE TO THE BUILDING SHALL BE 120/240 VOLTS, 1PHASE, 3WIRE.
3. ALL CONDUIT SHALL BE RUN CONCEALED UNLESS SPECIFICALLY SHOWN EXPOSED, OR INSTALLED IN EXPOSED CEILING.
4. THE CONTRACTOR SHALL CHECK ALL LIGHTING FIXTURES FOR EXACT TYPE MOUNTING AND SPACE REQUIRED BEFORE ROUGHING IN.
5. THE CONTRACTOR SHALL WORK CLOSELY WITH THE GENERAL CONTRACTOR AND VERIFY EXACT TYPE OF EQUIPMENT TO BE INSTALLED AND THE DIMENSIONS WHICH MAY AFFECT THE EXACT PLACEMENT OF ELECTRICAL WORK.
6. VERIFY THE EXACT LOCATION OF ALL MOTORS AND EQUIPMENT BEFORE ROUGHING IN. LIKEWISE APPRAISE ALL TRADES OF THE LOCATIONS OF ELECTRICAL WORK THAT AFFECTS WALL THICKNESS, PLUMBING, MECHANICAL, ETC.
7. ALL CONDUIT STUBBED OUT FOR FUTURE SHALL BE CAPPED AND HAVE LOCATION MARKED WITH A 2" SQUARE, PAINTED RED, WITH CONDUIT NAME AND SIZE SHOWN IN WHITE.
8. ALL BRANCH CIRCUITS AND FEEDERS SHALL HAVE AN INSULATED GROUND WIRE PULLED IN THE CONDUIT WITH CURRENT CONDUCTOR UNLESS SPECIFICALLY NOTED OTHERWISE ON THE PLANS. THE GROUNDING CONDUCTOR SHALL BE SIZED ACCORDING TO TABLE 250–122 OF THE LATEST EDITION OF THE NATIONAL ELECTRICAL CODE UNLESS INDICATED TO BE LARGER IN THE SPECIFICATIONS OR PLANS.
9. DO ALL WORK IN COMPLIANCE WITH ALL APPLICABLE CODES, LAWS AND ORDINANCES, THE NATIONAL ELECTRICAL CODE (HEREINAFTER REFERRED TO AS "CODE" OR "NEC"), THE AMERICANS WITH DISABILITIES ACT, AND THE REGULATIONS OF THE LOCAL AUTHORITIES HAVING JURISDICTION AND, WHERE APPLICABLE, UTILITY COMPANIES. OBTAIN AND PAY FOR ANY AND ALL REQUIRED PERMITS, INSPECTIONS, CERTIFICATES OF INSPECTIONS AND APPROVAL, AND THE LIKE, AND DELIVER SUCH CERTIFICATES TO THE OWNER.
10. THE MAIN SERVICE SHALL HAVE THE GROUNDED CONDUCTOR (NEUTRAL) GROUNDED TO THE GROUNDING ELECTRODE SYSTEM AT THE SUPPLY SIDE OF THE SERVICE DISCONNECTING MEANS BY A GROUNDING ELECTRODE CONDUCTOR NOT SMALLER THAN THAT SHOWN IN TABLE 250–66 OF THE NEC. THE GROUNDED CONDUCTOR (NEUTRAL), THE GROUNDING ELECTRODE CONDUCTOR, AND THE EQUIPMENT GROUNDING CONDUCTOR CONNECTIONS SHALL BE MADE INSIDE THE SERVICE ENTRANCE EQUIPMENT.
11. ALL CONDUCTORS SHALL BE COPPER, EXCEPT AS SHOWN ON DRAWINGS.
12. MINIMUM CONDUCTOR SIZE SHALL BE #12.
13. ALL CONDUIT INSTALLED INDOORS SHALL BE EMT, OTHERWISE SHALL BE IMC.
14. SWITCH AND RECEPTACLE COVER PLATES SHALL BE STAINLESS STEEL.
15. ALL DEVICES SHALL BE GRAY.
16. ALL FUSES SHALL BE DUAL ELEMENT, TIME DELAY, RATED 100,000 AIC.
17. ALL DISCONNECT SWITCHES SHALL BE HEAVY DUTY TYPE.
18. ALL CONDUCTORS SHALL BE DUAL RATED THHN/THWN TYPE INSULATION.
19. GUTTERS (WIREWAYS) SHALL BE SIZED AS SHOWN OR AS REQUIRED BY CODE. ALL GUTTERS SHALL HAVE HINGED COVERS WITH APPROVED FASTENING DEVICES & SHALL BE A STANDARD MANUFACTURED ITEM WITH U.L. LABEL. GUTTERS FROM AC DUCT MATERIAL ARE NOT ACCEPTABLE. GUTTERS SHALL BE AS MANUFACTURED BY HOFFMAN, SQUARE "D", B & C OR APPROVED EQUAL. GUTTER TAPS SHALL BE ILSCO TYPE GTA OF PTA WITH GTC OR PTC INSULATING COVERS.
20. IT SHALL BE THE RESPONSIBILITY OF THIS CONTRACTOR, PRIOR TO BID, TO REAFFIRM WITH THE UTILITY COMPANIES INVOLVED, THAT THE LOCATION, ARRANGEMENT (AND THE POWER COMPANY: VOLTAGE, PHASE & METERING REQUIRED) AND CONNECTIONS AT THE UTILITY SERVICE ARE IN ACCORDANCE WITH THEIR REGULATIONS & REQUIREMENTS. IF THEIR REQUIREMENTS ARE AT A VARIANCE WITH THESE DRAWINGS & SPECIFICATIONS, THE CONTRACT PRICE SHALL INCLUDE ANY ADDITIONAL COST NECESSARY TO MEET THOSE REQUIREMENTS WITHOUT EXTRA COST TO THE OWNER AFTER A CONTRACT HAS BEEN ENTERED INTO.
21. ON MANY PROJECTS, THE UTILITY COMPANY MAY LEVY CHARGES DUE TO LOCATION, SIZE OR TYPE OF SERVICE INVOLVED. THE CONTRACTOR SHALL BE RESPONSIBLE FOR THESE CHARGES, UNLESS SUCH CHARGES ARE NOT AVAILABLE PRIOR TO BID & CONTRACTOR SO DOCUMENTS AT BID OPENING. SHOULD THE THE COST NOT BE AVAILABLE, PRIOR TO BID, THE CONTRACTOR SHALL SUBMIT A LETTER SO STATING WITH HIS BID.
22. ARRANGE WITH UTILITY COMPANIES FOR SUCH SERVICE AS SHOWN OR HEREIN SPECIFIED & INSTALLATION OF METER WHERE SHOWN. FURNISH WITH SHOP DRAWINGS, A SIGNED DOCUMENT FROM UTILITY COMPANIES DESCRIBING THE LOCATION & TYPE OF SERVICES TO BE FURNISHED AND ANY REQUIREMENTS THEY MAY HAVE. THIS DOCUMENT SHALL BE SIGNED FOR EACH UTILITY COMPANY BY A PERSON RESPONSIBLE FOR GRANTING SUCH SERVICES.
23. PAY ALL CHARGES (IF ANY) IN CONNECTION THEREWITH, INCLUDING PERMANENT METER DEPOSIT. METER DEPOSIT WILL BE REFUNDED TO THE CONTRACTOR AT TIME OF OWNER'S ACCEPTANCE.

GIDEON WAMAE, P.E.

4120 OVERLOOK CIRCLE, TRUSSVILLE, AL 35173
GWAMAE@GW-ENG.COM | 205.413.4112

AHO ARCHITECTS, LLC
www.ahoarch.com

STATE OF TEXAS
GIDEON M. WAMAE
143851
LICENSED
PROFESSIONAL ENGINEER
8/19/26

Express Oil Change & Tire Engineers

Single Building / Right Hand Oil Change / Rear Enter / Side Tire Storage

Cross Roads, Texas (Aubrey)

FINAL

No.	Description	Date
IFP-0	Issued for Permit	06/30/2026
IFB-0	Iss. for Bid/AHJ Rev.	08/12/2026

© 2026 Aho Architects, LLC.
All Rights Reserved.

General Notes & Fixture Schedules

Project number	26013
Date	06/30/2026
Drawn by	TH
Checked by	GW

E100

Scale NO SCALE

8/25/2026 4:40:10 PM

GRAPHICAL ELECTRICAL SYMBOLS

BRANCH CIRCUIT SYMBOLS

	BRANCH CIRCUIT	HOMERUN TO 20A, 1POLE CIRCUIT BREAKER IN PANELBOARD OR DEVICE NOTED. WIRE SIZE IS 2#12&1#12GRD–3/4"C.
	BRANCH CIRCUIT	CONCEALED IN CEILING OR WALL.
	BRANCH CIRCUIT	CONCEALED IN FLOOR.
EX	BRANCH CIRCUIT	EXISTING CONDUIT BARS DENOTE NEW CONDUCTORS.
	BRANCH CIRCUIT	EXPOSED.
o	BRANCH CIRCUIT	RISER UP.
•	BRANCH CIRCUIT	RISER DOWN.

BRANCH CIRCUIT NOTES

	BRANCH CIRCUIT	3#12&1#12GRD–3/4"C
	BRANCH CIRCUIT	4#12&1#12GRD–3/4"C
10	BRANCH CIRCUIT	2#10&1#10GRD–3/4"C
10	BRANCH CIRCUIT	3#10&1#10GRD–3/4"C

SIZE CONDUIT PER NEC FOR GREATER NUMBER OF CONDUCTORS OR AS NOTED. THE NUMBER IN THE CIRCUIT INDICATES AWG WIRE SIZE AND THE HASHMARKS INDICATE THE NUMBER OF WIRES REQUIRED. EQUIPMENT GROUND CONDUCTOR SHALL BE SIZED IN ACCORDANCE WITH NEC TABLE 250–122. THE NUMBER OF HASH MARKS DO NOT INCLUDE EQUIPMENT GROUNDING CONDUCTOR.

FIRE ALARM SYSTEM SYMBOLS

F	MANUAL PULL STATION, MOUNT 48"H.
FACP	FIRE ALARM CONTROL PANEL WITH UNIVERSAL COMMUNICATOR SUPPORTING POTS, INTERNET AND CELLULAR COMMUNICATIONS.
FA	ANNUNCIATOR, FLUSH MOUNTED.
F	AUDIO AND ALARM SIGNAL LIGHT (87db, 110 CANDELLA), MOUNT 80"H TO BOTTOM OF DEVICE. ADA APPROVED.
F	WHITE ALARM SIGNAL LIGHT (110 CANDELLA), MOUNT 80"H TO BOTTOM OF DEVICE. ADA APPROVED.
	ADDRESSABLE SMOKE DETECTOR, PHOTOELECTRIC.
	ADDRESSABLE HEAT DETECTOR.
	ADDRESSABLE SMOKE DUCT DETECTOR, PHOTOELECTRIC.
WF	WATER FLOW CONNECTION.
TS	TAMPER SWITCH CONNECTION.
Z_C	CONTROL ZAM IN NEMA 1 ENCLOSURE.
Z_M	MONITOR ZAM IN NEMA 1 ENCLOSURE.
$SD	SMOKE DUCT DETECTOR FOR SMOKE DAMPER.

FIRE ALARM SYSTEM NOTES

NOTES:

1. ALL DEVICE BOXES SHALL BE FLUSH MOUNTED UNLESS NOTED BY "S" IN WHICH CASE THE DEVICES SHALL BE MOUNTED ON A SURFACE BOX, FURNISHED BY THE FIRE ALARM EQUIPMENT SUPPLIER, FINISHED TO MATCH THE ALARM SYSTEM EQUIPMENT.
2. FIRE ALARM WIRING SHALL BE IN CONDUIT.
3. THE FIRE ALARM SYSTEM SHALL BE IN ACCORDANCE WITH NFPA 72 REQUIREMENTS. THE SYSTEM SHALL BE INSTALLED BY A CERTIFIED FIRE ALARM CONTRACTOR WITH TEST AND START–UP CERTIFICATE DELIVERED TO THE ARCHITECT. FIRE ALARM SYSTEM IS TO BE MONITORED.
4. THE FIRE ALARM INSTALLATION SHALL BE IN CONFORMANCE WITH NFPA–70, NFPA–72, LOCAL CODES AND AUTHORITY HAVING JURISDICTION.
5. SHOP DRAWINGS FOR FIRE ALARM SYSTEM SHALL BE SUBMITTED TO THE AHJ FOR REVIEW AND APPROVAL PRIOR TO SYSTEM INSTALLATION. SHOP DRAWINGS SHALL INCLUDE, BUT NOT BE LIMITED TO, ALL OF THE FOLLOWING: 1. A FLOOR PLAN WHICH INDICATES THE USE OF ALL ROOMS. 2. LOCATIONS OF ALARM–INITIATION AND NOTIFICATION APPLIANCES. 3. ALARM CONTROL AND TROUBLE SIGNALING EQUIPMENT. 4. ANNUNCIATIONS. 5. POWER CONNECTION. 6. BATTERY CALCULATIONS. 7. CONDUCTOR TYPE AND SIZES. 8. VOLTAGE DROP CALCULATIONS. 9. MANUFACTURERS, MODEL NUMBERS AND LISTING INFORMATION FOR EQUIPMENT, DEVICES AND MATERIALS. 10. DETAILS OF CEILING HEIGHT AND CONSTRUCTION. 11. THE INTERFACE OF FIRE SAFETY CONTROL FUNCTIONS.

GENERAL SYMBOLS

J	JUNCTION BOX.
J	WALL MOUNTED JUNCTION BOX.
J	WALL MOUNTED JUNCTION BOX WITH FLEXIBLE CONNECTION TO EQUIPMENT.
TV	ONE GANG BOX WITH 3/4"C. STUB UP ABOVE ACCESSIBLE CEILING WITH COAXIAL CABLE AND TV JACKS.
$T	MANUAL MOTOR STARTER WITH THERMAL PROTECTION.
	SAFETY SWITCH, NON–FUSED.
	SAFETY SWITCH, FUSED.
	CIRCUIT BREAKER MOUNTED IN NEMA 1 ENCLOSURE UNLESS NOTED OTHERWISE
	LIGHTING PANEL AND/OR RECEPTACLE PANEL.
	POWER PANEL.
TR	TRANSFORMER.
	GROUND.

GENERAL ABBREVIATIONS

H	MOUNTING HEIGHT ABOVE FINISHED FLOOR.
AF	ABOVE FINISHED FLOOR.
WP	WEATHER PROOF – NEMA 3R
RT	RAIN TIGHT – NEMA 4.
EP	EXPLOSION PROOF.
TP	TAMPER PROOF.
A	MOUNT ABOVE COUNTER.
BC	MOUNT BELOW COUNTER.
F	FLUSH MOUNTED.
SLD	SEE SINGLE LINE DIAGRAM.
GFI	GROUND FAULT INTERRUPTING.
C	CONDUIT.
EC	EMPTY CONDUIT
GC	FLEXIBLE CONDUIT.
SFC	SEALTITE FLEXIBLE CONDUIT.
EMT	ELECTRICAL METALLIC TUBING.
IMC	INTERMEDIATE METALLIC CONDUIT.
RG	RIGID CONDUIT.
PVC	NONMETALLIC RIGID CONDUIT.
EX	EXISTING.
XR	EXISTING TO BE REMOVED
RL	EXISTING TO BE REMOVED AND RELOCATED.
RQ	EXISTING TO BE REMOVED. EXTEND CIRCUIT CONDUCTORS AS REQUIRED AND INSTALL FINISHED BLANK COVER.
RR	EXISTING TO BE REMOVED AND REPLACED WITH NEW.
RL'D	RELOCATED POSITION.
EM	EMERGENCY BATTERY PACK

LIGHTING FIXTURE & CONTROL SYMBOLS

1 A	CEILING OUTLET	FIXTURE TYPE "A" CIRCUIT #1.
	CEILING OUTLET	EXISTING.
	CEILING OUTLET	FLUORESCENT FIXTURE, SINGLE OR CONTINUOUS, LENGTHS AS SHOWN.
	CEILING OUTLET	FLUORESCENT STRIP.
	WALL OUTLET	BRACKET TYPE FIXTURE.
	WALL OUTLET	FLUORESCENT BRACKET TYPE FIXTURE.
$	SWITCH OUTLET	A.C. TYPE, SINGLE POLE, 20A, 125/277V.
$3	SWITCH OUTLET	A.C. TYPE, THREE WAY, 20A, 125/277V.
$4	SWITCH OUTLET	A.C. TYPE, FOUR WAY, 20A, 125/277V.
$OS	SWITCH OUTLET	180° DUAL TECH SENSOR LIGHTING MOTION DETECTOR, WALL MOUNTED. WATT STOPPER #DW–100.
PP	SWITCH OUTLET	LIGHTING MOTION DETECTOR POWER PACK. INSTALL ABOVE ACCESSIBLE CEILING.
M	SWITCH OUTLET	LIGHTING MOTION DETECTOR, CEILING MOUNTED.

SWITCH OUTLET NOTES

"a" "b" ETC.	FIXTURE CORRESPONDS TO A SWITCH DENOTED WITH THE SAME LOWER CASE LETTER.

EXIT LIGHT SYMBOLS

XL	WALL OR CEILING MOUNTED, SINGLE FACE, NO ARROW.
XL	CEILING MOUNTED, DOUBLE FACE, LEFT OR RIGHT ARROWS.
XL	WALL OR CEILING MOUNTED, SINGLE FACE, LEFT OR RIGHT ARROW.
XL	WALL OR CEILING MOUNTED, SINGLE FACE, LEFT AND RIGHT ARROWS.
XL	CEILING MOUNTED, DOUBLE FACE, LEFT AND RIGHT ARROWS.

RECEPTACLE OUTLET SYMBOLS

	WALL OUTLET	DUPLEX RECEPTACLE, 20A, 125V, 3WIRE, NEMA 5–20R.
	WALL OUTLET	DOUBLE DUPLEX RECEPTACLE, 20A, 125V, 3WIRE, NEMA 5–20R, SINGLE PLATE.
	WALL OUTLET	DUPLEX RECEPTACLE, 20A, 125V, NEMA 5–20R, GFCI, WEATHER–RESISTANT, WITH EXTRA DUTY IN–USE WEATHERPROOF COVER. HUBBELL CATALOG #GFR5362SGGY/WP8M
	WALL OUTLET	SINGLE RECEPTACLE, 20A, 250V, 3WIRE, NEMA 6–20R.
	WALL OUTLET	SINGLE RECEPTACLE, 20A, 250V, 3WIRE, NEMA L6–20R.
	FLOOR OUTLET	FLUSH MOUNTED IN–GRADE WITH DOUBLE DUPLEX RECEPTACLE, 20A, 125V, 3WIRE, NEMA 5–20R, FOUR SPACES FOR KEYSTONE CONNECTORS, AND BRUSHED BRASS COVER LEGRAND RFB4E OR EQUAL.
	CEILING OUTLET	DUPLEX RECEPTACLE, 20A, 125V, 3WIRE, NEMA 5–20R.

RECEPTACLE OUTLET NOTES

"G"	GROUND FAULT INTERRUPTER.
"GA"	GROUND FAULT INTERRUPTER, MOUNTED ABOVE COUNTER.
"A"	MOUNTED ABOVE COUNTER.
"BC"	MOUNTED BELOW COUNTER.
"DF"	FOR DRINKING FOUNTAIN.

VOICE/DATA OUTLET & CONDUIT SYMBOLS

▶	VOICE/DATA OUTLET	WALL MOUNTED, WITH 3/4" CONDUIT HOMERUN TO NEAREST TELEPHONE CABINET OR BACKBOARD UNLESS NOTED OTHERWISE.
——	VOICE/DATA OUTLET	TELEPHONE BACKBOARD – 3/4" PLYWOOD PAINTED WITH TWO COATS OF FIRE RETARDANT PAINT, 48"x96" HIGH, UNLESS SHOWN OTHERWISE.

VOICE/DATA OUTLET NOTES

"A"	MOUNTED ABOVE COUNTER.
"BC"	MOUNTED BELOW COUNTER.

NOTES:

1. INDICATED MOUNTING HEIGHTS ARE FROM FINISHED FLOOR TO CENTERLINE OF OUTLET BOX, UNLESS OTHERWISE NOTED.
2. REFER TO ARCHITECTURAL DETAILS FOR ADDITIONAL REQUIREMENTS.
3. INSTALL OUTLETS THAT ARE IN CLOSE PROXIMITY ON THE SAME CENTERLINE.
4. MOUNTING HEIGHTS SHOWN HERE ARE TYPICAL UNLESS NOTED OTHERWISE ON DRAWINGS.

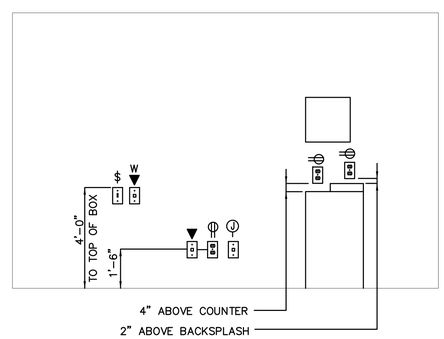

DETAIL
TYPICAL MOUNTING HEIGHTS
NOT TO SCALE

GIDEON WAMAE, P.E.

4120 OVERLOOK CIRCLE, TRUSSVILLE, AL 35173
GWAMAE@GW-ENG.COM | 205.413.4112

AHO ARCHITECTS, LLC
www.ahoarch.com

STATE OF TEXAS
GIDEON M. WAMAE
143851
LICENSED PROFESSIONAL ENGINEER
8/14/26

Express Oil Change & Tire Engineers

Single Building / Right Hand Oil Change / Rear Enter / Side Tire Storage

Cross Roads, Texas (Aubrey)

FINAL

No.	Description	Date
IFP-0	Issued for Permit	06/30/2026
IFB-0	Iss. for Bid/AHJ Rev.	08/12/2026

© 2026 Aho Architects, LLC.
All Rights Reserved.

Symbol Legends and Details

Project number	26013
Date	06/30/2026
Drawn by	TH
Checked by	GW

E101

Scale NO SCALE

8/25/2026 4:40:10 PM

DETAIL
ARC FLASH HAZARD WARNING LABEL
NOT TO SCALE

NOTES:

1. 48"x48" FREE STANDING TELEPHONE BACKBOARD. PROVIDE ACCESS AND WORK SPACE CLEARANCE AS REQUIRED BY LOCAL TELECOM UTILITY COMPANY.
2. CONDUIT ELBOWS SHALL BE SWEEPING WITH NO HARD ANGLES.

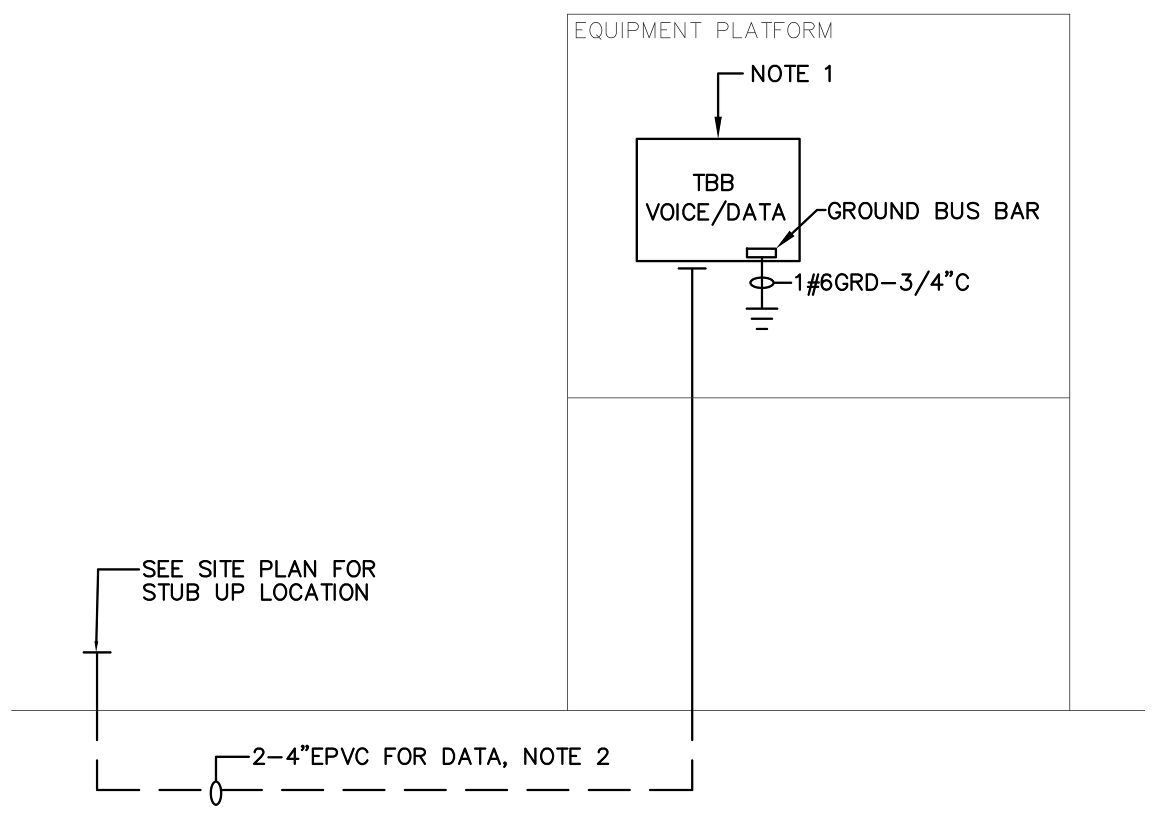

SINGLE LINE DIAGRAM
AUXILIARY
NOT TO SCALE

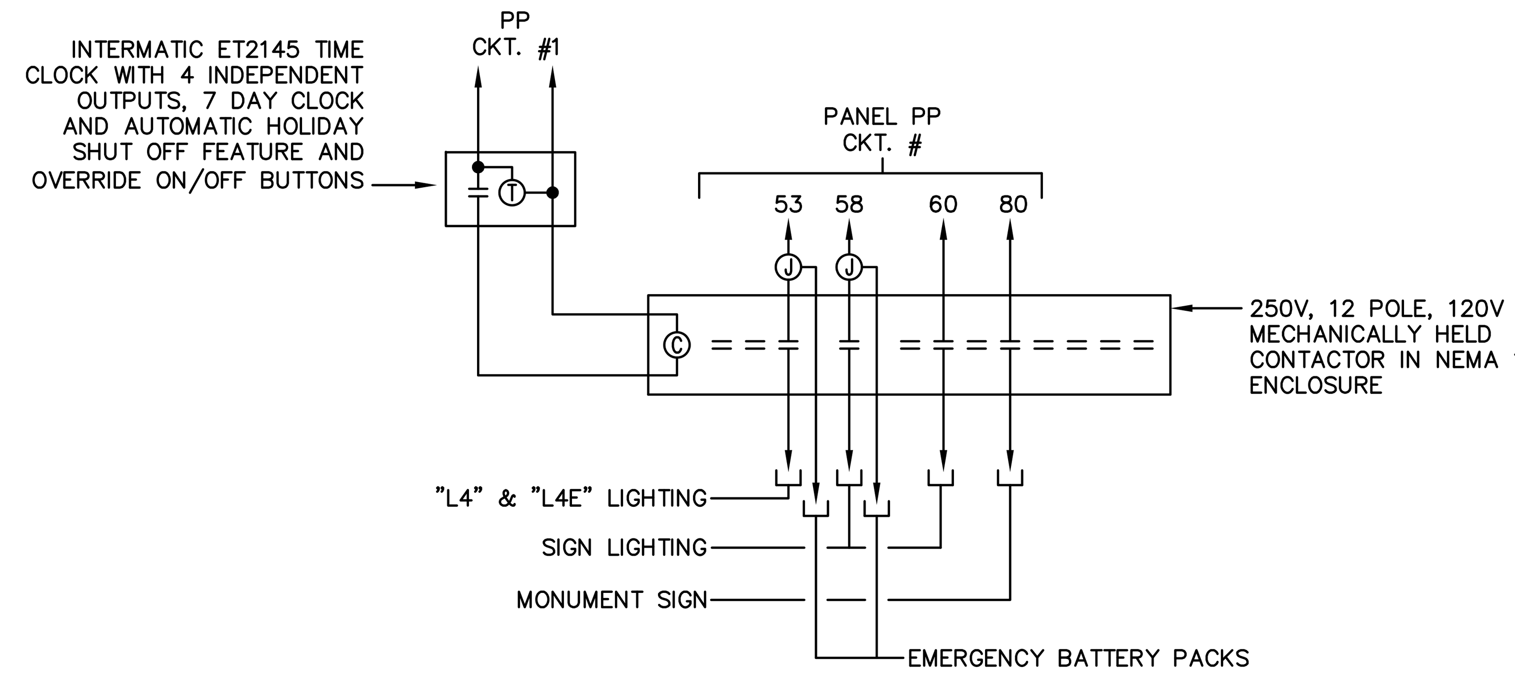

WIRING DIAGRAM
CONTACTOR C–2
NOT TO SCALE

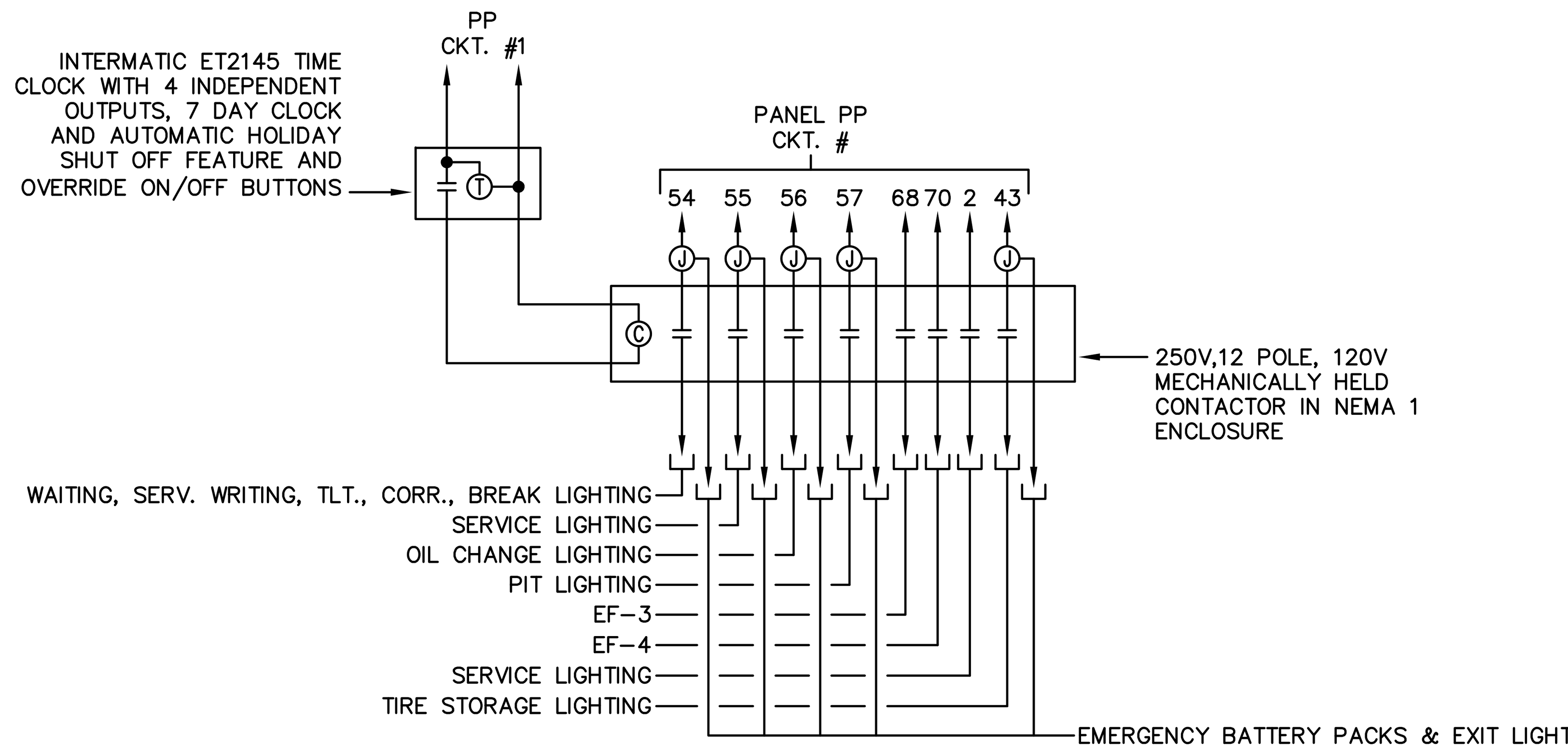

WIRING DIAGRAM
CONTACTOR C–1
NOT TO SCALE

PANEL LOAD SUMMARY

Panel: PP (SECTION I)

Equipment	LIGHT	RCPT	O/M	CB SIZE	CIRCUIT #	PHASE A	PHASE B	CIRCUIT #	CB SIZE	LIGHT	RCPT	O/M	Equipment
CONTACTOR C-1 & C-2			100	20/1	1	1300		2	20/1	1200			SERVICE LIGHTING
OUTDOOR RECEPTACLE		200		20/1	3		800	4	20/1		600		SERVICE WRITING RECEP.
WAITING ROOM RECEP.		800		20/1	5	1600		6	20/1		800		MANAGER RECEPTACLE
TLT/CORR/BREAK RECEP.		800		20/1	7		1000	8	20/1		200		BREAK RECEPTACLE
SERVICE RECEPTACLE		400		20/1(GFCI)	9	600		10	20/1		200		BREAK RECEPTACLE
SERVICE RECEPTACLE		400		20/1	11		600	12	20/1		200		BREAK FRIDGE RECEPTACLE
SERVICE RECEPTACLE		400		20/1(GFCI)	13	800		14	20/1		400		SERVICE RECEPTACLE
SERVICE RECEPTACLE		400		20/1	15		800	16	20/1		400		COFFEE MAKER
TIRE CHANGER		900		20/2	17	3900		18	30/2		3000		ALIGNMENT LIFT
		900			19		3900	20			3000		
10K LIFT		1440		20/2	21	2880		22	20/2		1440		10K LIFT
		1440			23		2880	24			1440		
10K LIFT		1440		20/2	25	2880		26	20/2		1440		10K LIFT
		1440			27		2880	28			1440		
12K LIFT		1440		20/2	29	2640		30	20/2		1200		WHEEL BALANCER
		1440			31		2640	32			1200		
AIR COMPRESSOR		3360		60/2	33	3760		34	20/1		400		MANAGER RECEPTACLE
		3360			35		3760	36	20/1		400		SERVICE DESK RECEPT.
IRRIGATION CONTROLLER		200		20/1	37	400		38	20/1		200		EQUPMENT PLATFORM RECEPT
OIL CHANGE RECEPTACLE		600		20/1	39		1200	40	20/1		600		OIL CHANGE RECEPTACLE
PIT SUMP PUMP		200		20/1	41	400		42	20/1		200		OIL CHANGE DESK RECEP.
Sub-Total	0	21560	100			21160	20460			1200	18760	0	Sub-Total

	TOTAL CONNECTED LOAD PER PHASE	
LOAD TYPE	Phase A	Phase B
LIGHTING	1200.00	0.00
RECEPTACLES	19860.00	20460.00
MOTORS/OTHER	100.00	0.00
TOTAL	21160.00	20460.00

TOTAL CONNECTED LIGHTING LOAD	1.20	KVA
TOTAL CONNECTED RECEPTACLE LOAD	40.32	KVA
TOTAL CONNECTED MOTOR/OTHER LOAD	0.10	KVA
TOTAL CONNECTED LOAD	41.62	KVA

* Diversified per NEC Table 220.44.

ENCLOSURE	NEMA 1
MOUNTING	SURFACE
MAIN TYPE	ML
SIZE	400A
FEED THRU	YES
FEED	BOTTOM
BUS RATING	400A
SERVICE RATED	NO
MIN FULL EQUIP KAIC RATING	22
TYPE	LOAD CENTER
MANUFACTURER	
OTHER	

VOLTS 120/ 240 V 1 Phase, 3 Wire & Grd Bus Bar

PANEL LOAD SUMMARY

Panel: PP (SECTION II)

Equipment	LIGHT	RCPT	O/M	CB SIZE	CIRCUIT #	PHASE A	PHASE B	CIRCUIT #	CB SIZE	LIGHT	RCPT	O/M	Equipment
STORAGE LIGHTING	800			20/1	43	1000		44	20/1		200		OIL CHANGE DESK RECEP.
OIL CHANGE DESK RECEP.		200		20/1	45		400	46	20/1		200		OIL CHANGE DESK RECEP.
SPARE				20/1	47	0		48	20/1				SPARE
PIT RECEPTACLE		600		20/1	49		800	50	20/1		200		PIT RECEPTACLE
SPARE				20/1	51	400		52	20/1		400		TBB RECEPTACLE
EXTERIOR LIGHTING	150			20/1	53		470	54	20/1	320			S.WRIT/WAIT/TLT/BRK LTG./EQUIP. PLATFORM/EF1&2
SERVICE LIGHTING	1638			20/1	55	2366		56	20/1	728			OIL CHANGE LIGHTING
PIT LIGHTING	540			20/1	57		1890	58	20/1	1350			SIGN LIGHTING
SPARE				20/1	59	400		60	20/1	400			SIGN LIGHTING
FUTURE EV CHARGER				50/2	61		50	62	20/1			50	REC-1
					63	1680		64	25/2			1680	OHP-1
FACP		500		20/1	65		2180	66				1680	
EWH-1			2250	25/2	67	3906		68	20/1			1656	EF-3
			2250		69		3906	70	20/1			1656	EF-4
RH-1			100	20/1	71	300		72	20/1		200		EXTERIOR RECEPTACLE
RH-2 & RH-3			100	20/1	73		8100	74	90/2			8000	AHU-1
~~DRINKING FOUNTAIN~~		~~200~~		~~20/1~~	~~75~~	8200		76				8000	
EUH-1			1500	20/2	77		1900	78	20/1		400		LOT BELL
			1500		79	1600		80	20/1			100	MONUMENT SIGN
~~LIFT RECEPTACLE~~		~~600~~		~~20/1~~	~~81~~		1000	82	15/2			400	FAC-1
LIFT RECEPTACLE		600		20/1	83			84				400	
Sub-Total	3128	2700	7700			19852	20696			2798	1600	23622	Sub-Total

IFB-0

	TOTAL CONNECTED LOAD PER PHASE		DEMAND FACTOR	DEMAND LOAD (VA)	
LOAD TYPE	Phase A	Phase B		Phase A	Phase B
LIGHTING	4766.00	2360.00	1.25	5957.50	2950.00
RECEPTACLES	20860.00	23160.00	*	12930.00	14080.00
MOTORS/OTHER	15386.00	15636.00	1.00	15386.00	15636.00
TOTAL	41012.00	41156.00		34273.50	32666.00

TOTAL CONNECTED LIGHTING LOAD	5.93	KVA
TOTAL CONNECTED RECEPTACLE LOAD	4.30	KVA
TOTAL CONNECTED MOTOR/OTHER LOAD	31.32	KVA
TOTAL CONNECTED LOAD	41.55	KVA

* Diversified per NEC Table 220.44.

WIRE SIZE CALCULATIONS		
LARGEST PHASE DEMAND	34.27	KVA
NO. OF PHASES	2.00	
DEMAND LOAD	68.55	KVA
TOTAL DEMAND LOAD	68.55	KVA
SUPPLY VOLTAGE	240.00	V
DEMAND AMPS	285.61	AMPS
MINIMUM CCT AMPS	285.61	AMPS

ENCLOSURE	NEMA 1
MOUNTING	SURFACE
MAIN TYPE	ML
SIZE	400A
FEED THRU	NO
FEED	TOP
BUS RATING	400A
SERVICE RATED	NO
MIN FULL EQUIP KAIC RATING	22
TYPE	LOAD CENTER
MANUFACTURER	
OTHER	

VOLTS 120/ 240 V 1 Phase, 3 Wire & Grd Bus Bar

GENERAL NOTES:

1. COORDINATE SERVICE SECONDARY FROM UTILITY TRANSFORMER TO METER WITH POWER COMPANY BEFORE BID AND PRICING. PROVIDE PER POWER COMPANY REQUIREMENTS.
2. EQUIPMENT WITH ALUMINUM FEEDERS SHALL BE PROVIDED WITH DUAL RATED TERMINALS.
3. PROVIDE 120/240V, 1Ø, 400A, UNDERGROUND SERVICE.
4. SERVICE DISCONNECT SHALL BE MOUNTED SUCH THAT CENTER OF OPERATING HANDLE SHALL NOT BE LESS THAN 4' AND NOT MORE THAN 6'–7" ABOVE GRADE.

(The general notes are printed 1, 2, 3, 3, 4; the fourth item above is printed as 4. The second note numbered 3 reads:)

3. PROVIDE 2"X3" ENGRAVED LABEL WITH BLUE LETTERING INDICATING MAXIMUM AVAILABLE FAULT CURRENT AND DATE OF CALCULATION.

NOTES:

1. SERVICE ENTRANCE RATED DISCONNECT SWITCH, NEMA 3R ENCLOSURE
2. COORDINATE METERING WITH POWER COMPANY BEFORE ROUGHING IN.

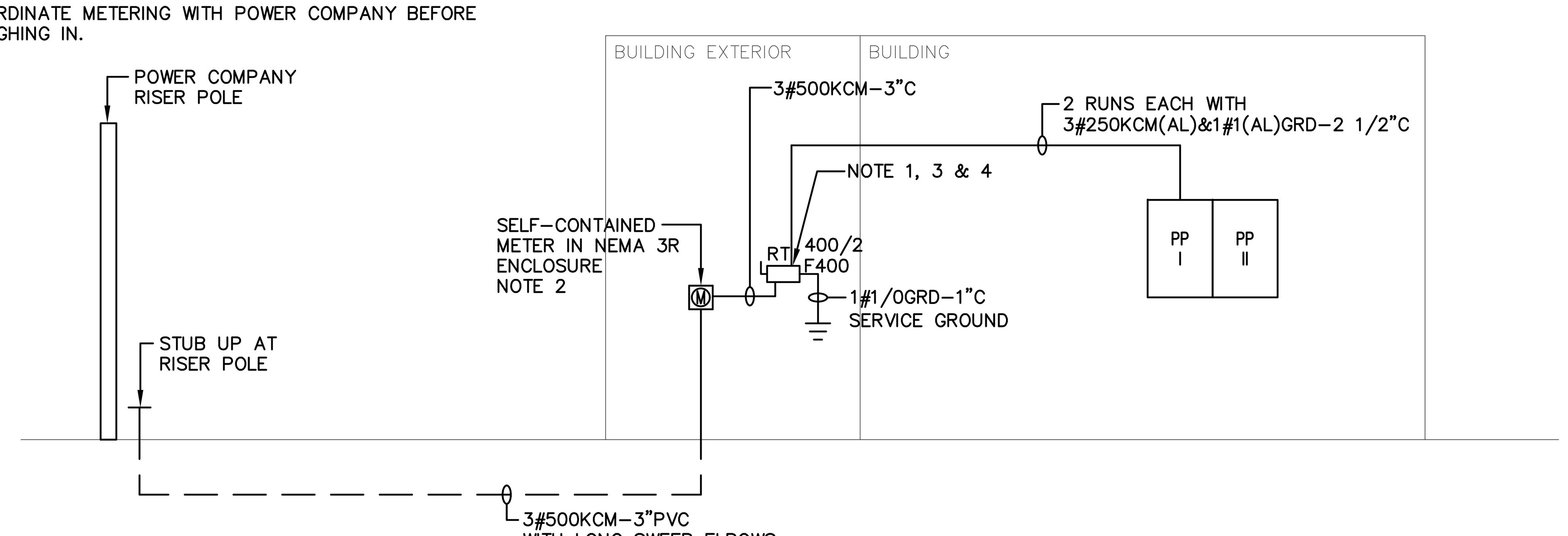

SINGLE LINE DIAGRAM
POWER
NOT TO SCALE

EQUIPMENT ELECTRICAL REQUIREMENTS SCHEDULE

EQUIPMENT	LOCATION	KW	HP	AMP	CIRCUIT BREAKER	DISCONNECT SWITCH/FUSE	CONDUCTORS & CONDUIT	VOLTAGE	CONNECTION
(4) 10K LIFT	SERVICE 11	–	2	12.0	20/2	–	2#12&1#12GRD–3/4"C	240V,1Ø	HARDWIRED
12K LIFT	SERVICE 11	–	2	12.0	20/2	–	2#12&1#12GRD–3/4"C	240V,1Ø	HARDWIRED
AIR COMPRESSOR	STORAGE 12	–	5	28.0	60/2	60/2, F40	2#8&1#10GRD–3/4"C	240V,1Ø	HARDWIRED
TIRE CHANGER	SERVICE 11	–	–	6.0	20/2	30/2	2#12&1#12GRD–3/4"C	240V,1Ø	HARDWIRED
WHEEL BALANCER	SERVICE 11	–	–	20.0	20/2	30/2	2#12&1#12GRD–3/4"C	240V,1Ø	HARDWIRED
ALIGNMENT LIFT	SERVICE 11	–	–	26.0	30/2	30/2, F30	2#10&1#10GRD–3/4"C	240V,1Ø	HARDWIRED

NOTES:

1. CONTRACTOR SHALL COORDINATE REQUIREMENTS SHOWN HERE WITH OWNER BEFORE ROUGHING IN. PROVIDE ELECTRICAL PER OWNER EQUIPMENT VENDOR REQUIREMENTS.

GIDEON WAMAE, P.E.
4120 OVERLOOK CIRCLE, TRUSSVILLE, AL 35173
GWAMAE@GW-ENG.COM | 205.413.4112

AHO ARCHITECTS, LLC
www.ahoarch.com

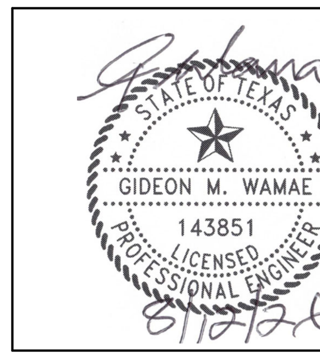

Express Oil Change & Tire Engineers
Single Building / Right Hand Oil Change / Rear Enter / Side Tire Storage
Cross Roads, Texas (Aubrey)

FINAL

No.	Description	Date
IFP-0	Issued for Permit	06/30/2026
IFB-0	Iss. for Bid/AHJ Rev.	08/12/2026

© 2026 Aho Architects, LLC. All Rights Reserved.

Single Line Diagram & Panelboard Schedules

Project number	26013
Date	06/30/2026
Drawn by	TH
Checked by	GW

E102

Scale NO SCALE

8/25/2026 4:40:10 PM

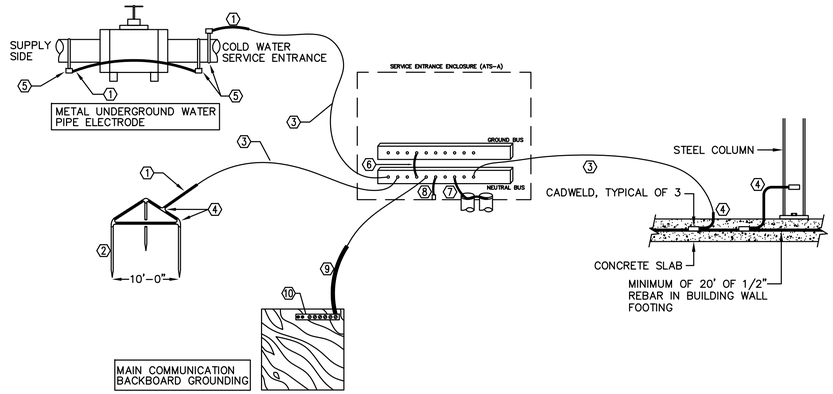

GROUNDING SYSTEM DETAIL
NOT TO SCALE

GROUNDING SYSTEM DETAIL – KEY NOTES

1. 4/0 BARE GROUNDING ELCTRODE CONDUCTOR.
2. 3/4"x10'-0" CLAD STEEL GROUND ROD, DRIVEN 24" BELOW GRADE, MINIMUM.
3. 4/0 BARE GROUNDING ELECTRODE CONDUCTOR IN 2"PVC-40.
4. EXOTHERMIC WELD CONNECTOR:
   TWO CABLES TO GROUND ROD, CADWELD #GT OR #GY
   CABLE TO CABLE TEE, CADWELD #TA
   ONE CABLE TO GROUND ROD, CADWELD #GR
5. CAST BRONZE, UL LISTED GROUND CLAMP, O-Z/GEDNEY TYPE-G.
6. BONDING JUMPER, SIZED BY EQUIPMENT MANUFACTURER PER NEC 250-66.
7. BONDING JUMPER TO GROUNDING BUSHING. AND BONDING JUMPERS FROM CONDUIT TO CONDUIT. ALL CONDUIT CONNECTED TO THE SERVICE ENTRANCE ENCLOSURE SHALL BE BONDED, SIZED PER NEC 250.
8. MAIN BONDING JUMPER, SIZED BY MANUFACTURER PER 250-66.
9. 4/0 BARE BONDING JUMPER.
10. 6 CONDUCTOR GROUND BUS, COPPER OR ALUMINUM RATED, ILSCO #PDE.

TYPICAL FEEDER DESIGNATION

_#_ & 1#_GRD – _C (_A/_P)

- NUMBER OF CIRCUIT CONDUCTORS
- SIZE OF CIRCUIT CONDUCTORS "AWG UNLESS NOTED kCMIL"
- SIZE OF GROUNDING CONDUCTOR
- SIZE OF CONDUIT
- PROTECTIVE DEVICE TO WHICH THE CIRCUIT IS CONNECTED

NOTE:

1. CONDUCTOR INSULATION TO BE 600V UNLESS OTHERWISE INDICATED.

TYPICAL LUMINAIRE, DEVICE AND CIRCUIT DESIGNATIONS

a(R)1	LUMINAIRE TYPE 'R', CIRCUIT NO. 1, CONTROLLED BY SWITCH "a"
2[A]b	FLUORESCENT LUMINAIRE TYPE 'A', CIRCUIT NO. 2, CONTROLLED BY SWITCH "b"
2	WALL OUTLET WITH RECEPTACLE NOTED, CONNECT TO CIRCUIT NO. 2
1(J)	EQUIPMENT CONNECTION – CONNECT TO CIRCUIT NO. 1

DETAIL
WIRING DESIGNATION
NOT TO SCALE

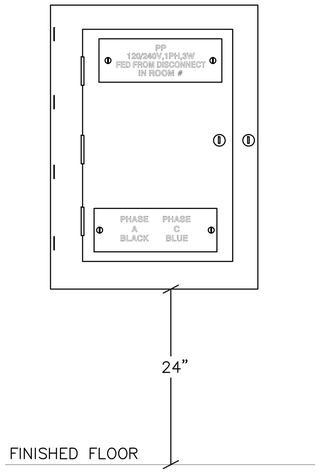

DETAIL
120/240V PANELBOARD INSTALLATION & NAMEPLATE DETAIL
NOT TO SCALE

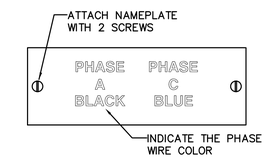

DETAIL
120/240V PANELBOARD ELECTRICAL NAMEPLATE
NOT TO SCALE

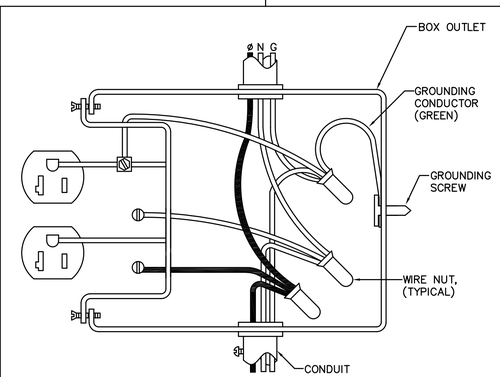

DETAIL
RECEPTACLE INSTALLATION
NOT TO SCALE

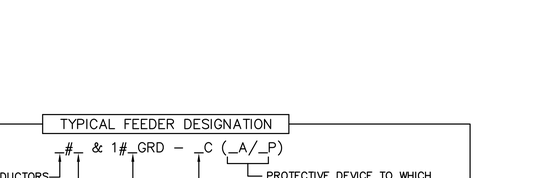

DETAIL
AVAILABLE FAULT CURRENT NAMEPLATE
NOT TO SCALE

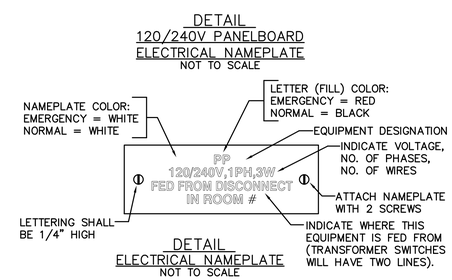

DETAIL
ELECTRICAL NAMEPLATE
NOT TO SCALE

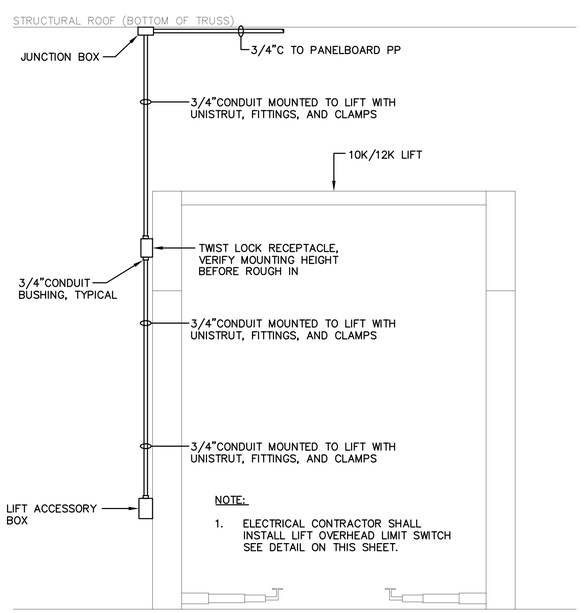

NOTE:

1. ELECTRICAL CONTRACTOR SHALL INSTALL LIFT OVERHEAD LIMIT SWITCH SEE DETAIL ON THIS SHEET.

ELEVATION
LIFT POWER DETAIL
NOT TO SCALE

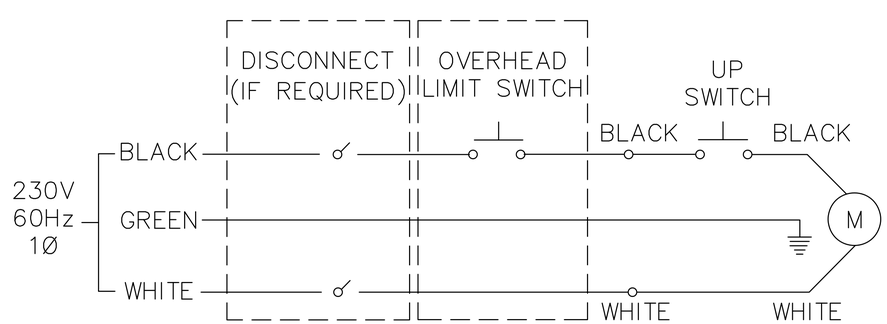

LIFT LIMIT SWITCH
WIRING DETAIL
NOT TO SCALE

GIDEON WAMAE, P.E.

4120 OVERLOOK CIRCLE, TRUSSVILLE, AL 35173
GWAMAE@GW-ENG.COM | 205.413.4112

AHO ARCHITECTS, LLC
www.ahoarch.com

STATE OF TEXAS
GIDEON M. WAMAE
143851
LICENSED PROFESSIONAL ENGINEER
8/19/26

Express Oil Change & Tire Engineers
Single Building / Right Hand Oil Change / Rear Enter / Side Tire Storage
Cross Roads, Texas (Aubrey)

FINAL

No.	Description	Date
IFP-0	Issued for Permit	06/30/2026
IFB-0	Iss. for Bid/AHJ Rev.	08/12/2026

© 2026 Aho Architects, LLC. All Rights Reserved.

Details

Project number	26013
Date	06/30/2026
Drawn by	TH
Checked by	GW

E103

Scale NO SCALE

8/25/2026 4:40:10 PM

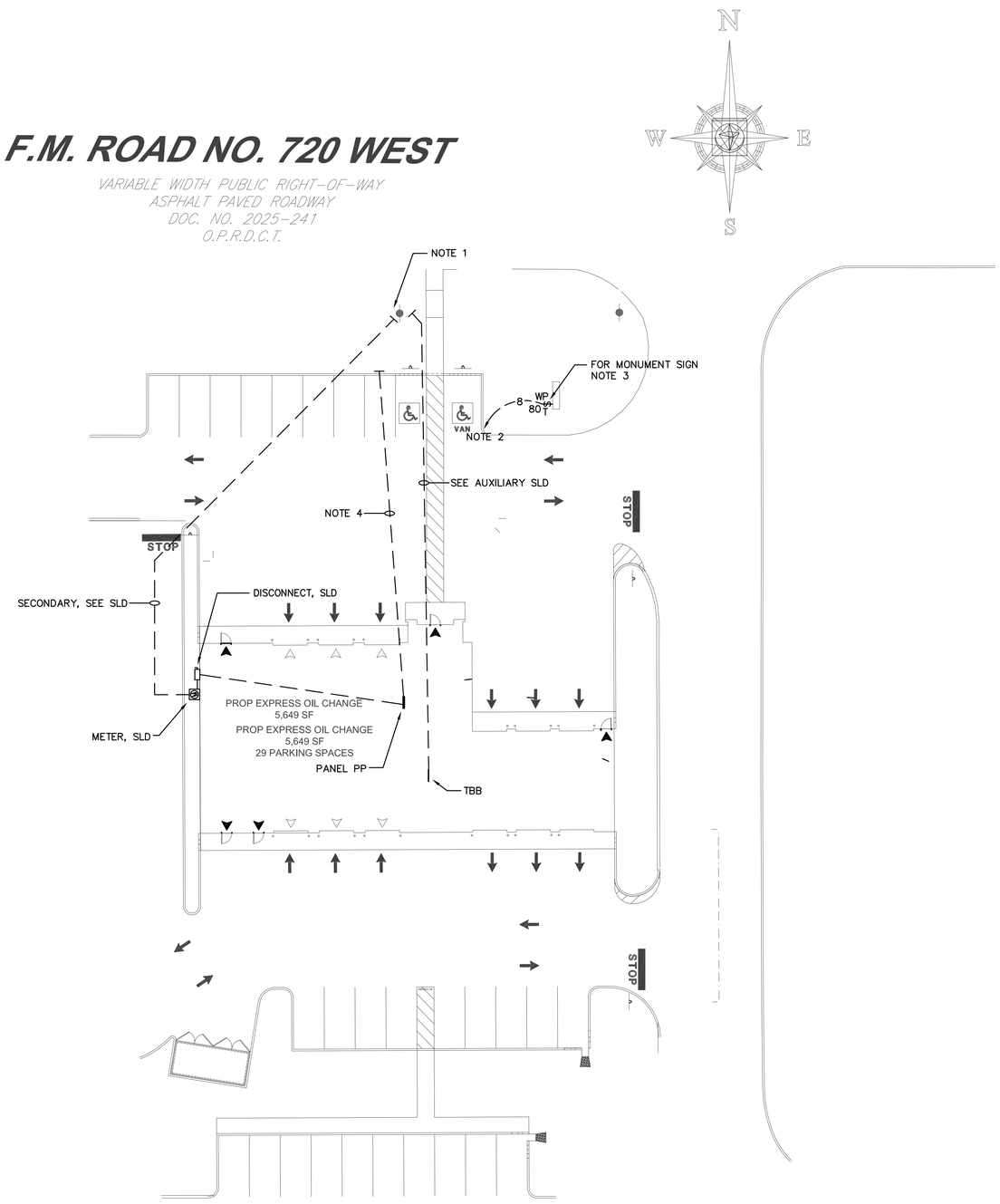

1 Site Plan - Electrical
1" = 20'-0"

NOTES:

1. VERIFY EXACT LOCATION OF STUB UP BEFORE ROUGH IN.
2. HOMERUN TO PANELBOARD PP THROUGH LIGHTING CONTACTOR C-2.
3. LOCATION OF MONUMENT SIGN SHOWN HERE IS FOR CIRCUIT INFORMATION ONLY. VERIFY EXACT LOCATION OF MONUMENT SIGN WITH CIVIL PRIOR TO ROUGH IN.
4. PROVIDE 1-1" EMPTY CONDUIT. HOMERUN TO PANEL PP FOR FUTURE EV CHARGING STATION. VERIFY EXACT LOCATION OF STUB UP WITH ARCHITECT AND CIVIL PRIOR TO INSTALLATION.

GIDEON WAMAE, P.E.

4120 OVERLOOK CIRCLE, TRUSSVILLE, AL 35173
GWAMAE@GW-ENG.COM | 205.413.4112

AHO ARCHITECTS, LLC
www.ahoarch.com

STATE OF TEXAS
GIDEON M. WAMAE
143851
LICENSED
PROFESSIONAL ENGINEER
8/19/26

Express Oil Change & Tire Engineers

Single Building / Right Hand Oil Change / Rear Enter / Side Tire Storage

Cross Roads, Texas (Aubrey)

FINAL

No.	Description	Date
IFP-0	Issued for Permit	06/30/2026
IFB-0	Iss. for Bid/AHJ Rev.	08/12/2026

© 2026 Aho Architects, LLC.
All Rights Reserved.

Site Plan - Electrical

Project number	26013
Date	06/30/2026
Drawn by	TH
Checked by	GW

E104

Scale 1" = 20'-0"

8/25/2026 4:40:10 PM

GENERAL NOTES:

1. CONNECT ALL "BL", "XL" AND EMERGENCY BATTERY PACKS IN FIXTURES MARKED "EM" TO UNSWITCHED HOT LEG OF CIRCUIT.
2. ENSURE LIGHTING FIXTURES L1 AND L2 DO NOT CONFLICT WITH OH DOORS.
3. FOR THE LIGHTING PACKAGE PRICING CONTACT THE FOLLOWING:

   MIKE MCMAKEN
   REXEL ENERGY SOLUTIONS
   (M) 906 - 235 - 2979
   MIKE.MCMAKEN@REXELENERGY.COM
4. ALL CONDUIT CROSSING OVERHEAD DOORS SHALL BE MOUNTED AS TIGHT TO THE STRUCTURE AS POSSIBLE TO AVOID CONFLICT WITH THE OVERHEAD DOOR TRACK.
5. OIL CHANGE BUILDING IS A MINOR REPAIR GARAGE AND IS UNCLASSIFIED. SEE MECHANICAL DRAWINGS FOR PROVIDED VENILATION.
6. ALL L1P FIXTURES SHALL BE INSTALLED SO THAT THE FIXTURES HANG JUST BELOW THE OVERHEAD DOOR TRACK WHILE THEY ARE OPEN. COORDINATE EXACT LOCATION OF FIXTURES TO ENSURE FIXTURES ARE NOT MOUNTED ABOVE HEATERS.

NOTES:

1. CONNECT TO CORRIDOR LIGHTING BRANCH CIRCUIT ON MAIN LEVEL.. CONNECT TO LITCH SWITCH ON MAIN LEVEL.
2. HOMERUN TO 20A, 1POLE CIRCUIT BREAKER IN PANELBOARD PP THROUGH LIGHTING CONTACTOR C-1. SEE DETAIL ON SHEET E102.
3. HOMERUN TO 20A, 1POLE CIRCUIT BREAKER IN PANELBOARD PP THROUGH LIGHTING CONTACTOR C-2. SEE DETAIL ON SHEET E102.
4. JUNCTION BOX FOR SIGN COMPANY PROVIDED FIXTURE SHALL BE MOUNTED FLUSH WITH EXTERIOR FACE OF WALL AT 60" ABOVE GRADE ON CENTER.
5. JUNCTION BOX FOR SIGN COMPANY PROVIDED FIXTURE SHALL BE MOUNTED ON EXTERIOR FACE OF WALL AT 17'AFF. COORDINATE EXACT LOCATION WITH SIGN LIGHTING INSTALLER BEFORE ROUGHING IN.
6. SURFACE MOUNT FIXTURE TO CEILING IN THIS AREA.

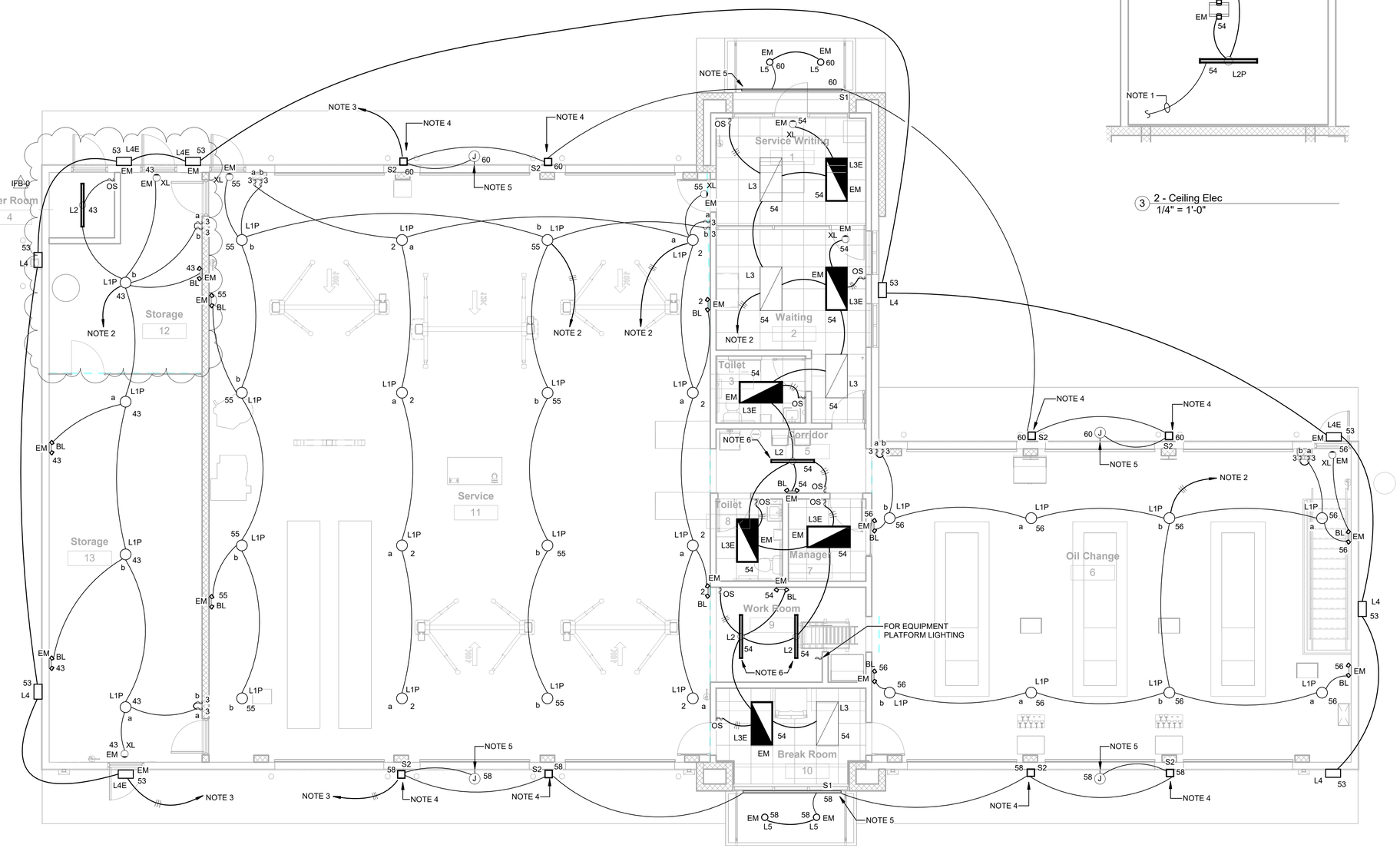

1 Main Level Plan - Lighting
3/16" = 1'-0"

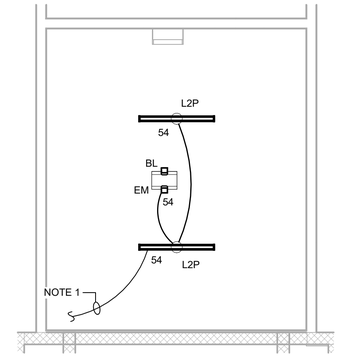

3 2 - Ceiling Elec
1/4" = 1'-0"

GIDEON WAMAE, P.E.

4120 OVERLOOK CIRCLE, TRUSSVILLE, AL 35173
GWAMAE@GW-ENG.COM | 205.413.4112

AHO ARCHITECTS, LLC
www.ahoarch.com

STATE OF TEXAS
GIDEON M. WAMAE
143851
LICENSED PROFESSIONAL ENGINEER
8/12/26

Express Oil Change & Tire Engineers

Single Building / Right Hand Oil Change / Rear Enter / Side Tire Storage

Cross Roads, Texas (Aubrey)

FINAL

No.	Description	Date
IFP-0	Issued for Permit	06/30/2026
IFB-0	Iss. for Bid/AHJ Rev.	08/12/2026

© 2026 Aho Architects, LLC.
All Rights Reserved.

Main Level Plan - Lighting

Project number	26013
Date	06/30/2026
Drawn by	TH
Checked by	GW

E200

Scale As indicated

8/25/2026 4:45:45 PM

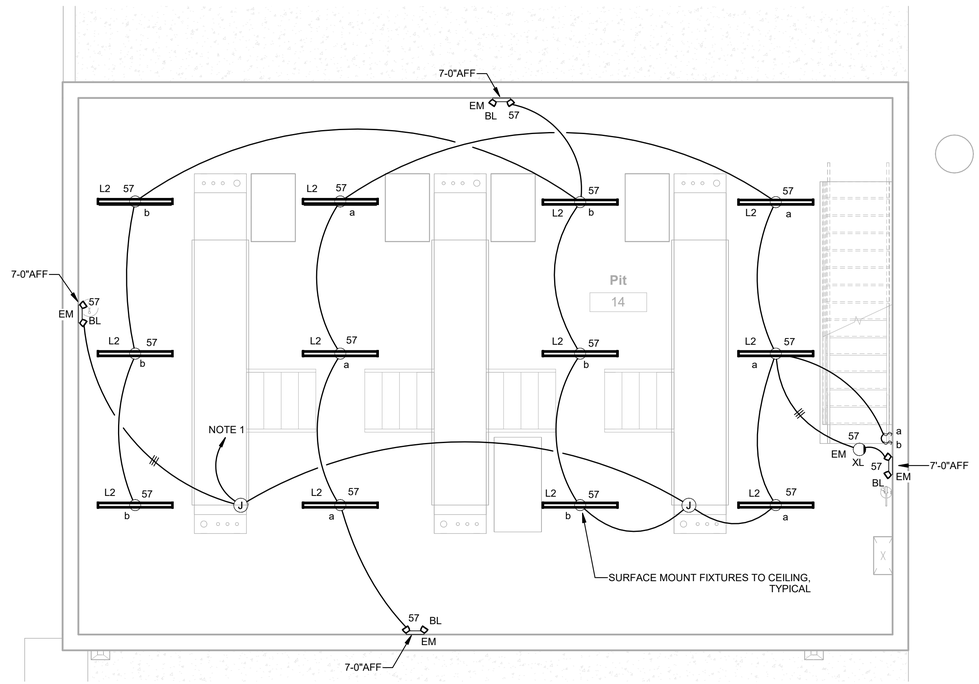

1 Pit Level Plan - Lighting
1/4" = 1'-0"

PLAN NORTH

GENERAL NOTES:

1. CONNECT ALL "BL", "XL" AND EMERGENCY BATTERY PACKS IN FIXTURES MARKED "EM" TO UNSWITCHED HOT LEG OF CIRCUIT.

2. FOR THE LIGHTING PACKAGE PRICING, CONTACT THE FOLLOWING:

   MIKE MCMAKEN
   REXEL ENERGY SOLUTIONS
   (M) 906-235-2979
   MIKE.MCMAKEN@REXELENERGY.COM

3. OIL CHANGE BUILDING IS A MINOR REPAIR GARAGE AND IS UNCLASSIFIED. SEE MECHANICAL DRWINGS FOR PROVIDED VENTILATION.

4. ADJUST LIGHT FIXTURES AS NEEDED TO AVOID CONFLICT WITH STRUCTURAL STEEL.

NOTES:

1. HOMERUN TO 20A, 1POLE CIRCUIT BREAKER IN PANELBOARD PP THROUGH LIGHTING CONTACTOR C-1.

GIDEON WAMAE, P.E.

4120 OVERLOOK CIRCLE, TRUSSVILLE, AL 35173
GWAMAE@GW-ENG.COM | 205.413.4112

AHO ARCHITECTS, LLC

www.ahoarch.com

STATE OF TEXAS
GIDEON M. WAMAE
143851
LICENSED PROFESSIONAL ENGINEER
8/12/26

Express Oil Change & Tire Engineers

Single Building / Right Hand Oil Change / Rear Enter / Side Tire Storage

Cross Roads, Texas (Aubrey)

FINAL

No.	Description	Date
IFP-0	Issued for Permit	06/30/2026
IFB-0	Iss. for Bid/AHJ Rev.	08/12/2026

© 2026 Aho Architects, LLC.
All Rights Reserved.

Pit Level Plan - Lighting

Project number	26013
Date	06/30/2026
Drawn by	TH
Checked by	GW

E201

Scale 1/4" = 1'-0"

8/25/2026 4:49:13 PM

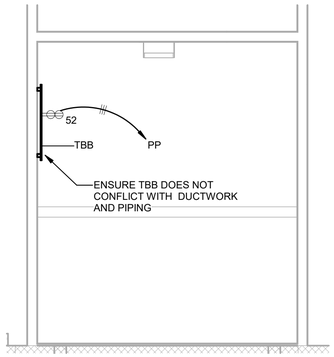

2 Equipment Platform Plan - Power & Voice/Data
1/4" = 1'-0"

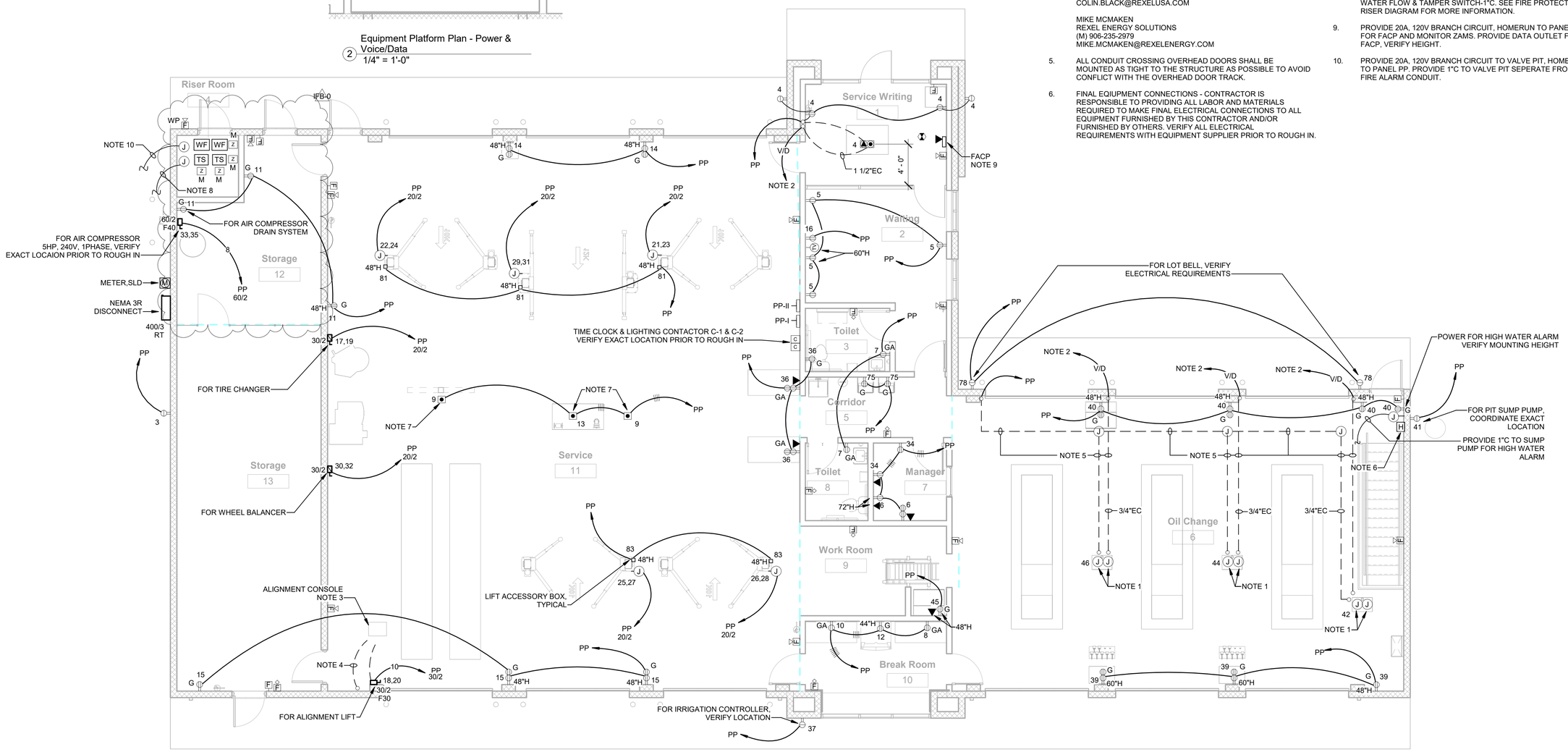

1 Main Level Plan - Power & Voice/Data
3/16" = 1'-0"

PLAN NORTH

GENERAL NOTES:

1. CONTRACTOR SHALL VERIFY/COORDINATE LOCATION OF ALL POWER & DATA OUTLETS FOR EQUIPMENT. OBTAIN OWNER'S APPROVAL BEFORE ROUGH IN, NO EXCEPTIONS. NO ADDITIONAL COMPENSATION SHALL BE AWARDED FOR ANY ADDITIONAL WORK REQUIRED TO RELOCATE OUTLETS DUE TO CONTRACTOR'S FAILURE TO COORDINATE WITH OWNER.
2. ALL HORIZONTAL CONDUIT RUNS SHALL BE A MINIMUM OF 8' ABOVE FINISHED FLOOR EXCEPT FOR DROPS. ENSURE CONDUIT DOES NOT CONFLICT WITH OVERHEAD DOOR.
3. OIL CHANGE BUILDING IS A MINOR REPAIR GARAGE AND IS UNCLASSIFIED. SEE MECHANICAL DRAWINGS FOR PROVIDED VENILATION.
4. EXPRESS OIL CHANGE HAS OBTAINED EQUIPMENT AVALABILITY AND SPECIAL VOLUME PRICING ON POWER EQUIPMENT AND LIGHTING CONTROL PACKAGES FROM REXEL. SEE CONTACTS BELOW FOR PRICING AND INFORMATION:

   JEFFREY PARKER
   REXEL
   (M) 508-916-7758
   JEFFREY.PARKER@REXELUSA.COM

   COLIN BLACK
   REXEL
   COLIN.BLACK@REXELUSA.COM

   MIKE MCMAKEN
   REXEL ENERGY SOLUTIONS
   (M) 906-235-2979
   MIKE.MCMAKEN@REXELENERGY.COM
5. ALL CONDUIT CROSSING OVERHEAD DOORS SHALL BE MOUNTED AS TIGHT TO THE STRUCTURE AS POSSIBLE TO AVOID CONFLICT WITH THE OVERHEAD DOOR TRACK.
6. FINAL EQIUPMENT CONNECTIONS - CONTRACTOR IS RESPONSIBLE TO PROVIDING ALL LABOR AND MATERIALS REQUIRED TO MAKE FINAL ELECTRICAL CONNECTIONS TO ALL EQUIPMENT FURNISHED BY THIS CONTRACTOR AND/OR FURNISHED BY OTHERS. VERIFY ALL ELECTRICAL REQUIREMENTS WITH EQUIPMENT SUPPLIER PRIOR TO ROUGH IN.

NOTES:

1. 3/4" CONDUIT STUBBED UP 18" INTO WORK PEDESTAL BASE POST. PROVIDE FLEXIBLE CONDUIT INTO WORK PEDESTAL CABINET. COORDINATE OUTLET REQUIREMENTS PRIOR TO ROUGH IN.
2. HOMERUN 3/4"EC TO TELEPHONE BACKBOARD.
3. LOCATIONS SHOWN HERE ARE APPROXIMATE. FIELD COORDINATE EXACT LOCATION OF CONSOLE & CONDUIT WITH OWNER & ALIGNMENT LIFT SHOP DRAWINGS BEFORE ROUGH-IN.
4. PROVIDE 1 1/2" EMPTY CONDUIT FROM CONSOLE, STUBBED 8" UP ON INSIDE FACE OF EXTERIOR WALL.
5. CONDUIT FOR WORK PEDESTALS IN OIL CHANGE AREA SHALL BE MOUNTED/ROUTED ON THE CEILING OF THE PIT IN LIEU OF IN THE SLAB.
6. ELECTRICAL CONTRACTOR SHALL FURNISH AND INSTALL ZOELLER - Z CONTROL APAK INDOOR ALARM WITH MECHANICAL FLOAT, MODEL # 10-4014. SEE MANUFACTURER INSTALLATION INSTRUCTIONS PRIOR TO ROUGH IN. PROVIDE BATTERIES.
7. CONTRACTOR SHALL PROVIDE UNISTRUT SPANNING BETWEEN BAR JOISTS FOR MOUNTING OF CELING RECEPTACLES.
8. TO VALVE PIT FOR FIRE ALARM SYSTEM SUPERVISION OF WATER FLOW & TAMPER SWITCH-1"C. SEE FIRE PROTECTION RISER DIAGRAM FOR MORE INFORMATION.
9. PROVIDE 20A, 120V BRANCH CIRCUIT, HOMERUN TO PANEL PP FOR FACP AND MONITOR ZAMS. PROVIDE DATA OUTLET FOR FACP, VERIFY HEIGHT.
10. PROVIDE 20A, 120V BRANCH CIRCUIT TO VALVE PIT, HOMERUN TO PANEL PP. PROVIDE 1"C TO VALVE PIT SEPERATE FROM FIRE ALARM CONDUIT.

GIDEON WAMAE, P.E.

4120 OVERLOOK CIRCLE, TRUSSVILLE, AL 35173
GWAMAE@GW-ENG.COM | 205.413.4112

AHO ARCHITECTS, LLC
www.ahoarch.com

STATE OF TEXAS
GIDEON M. WAMAE
143851
LICENSED PROFESSIONAL ENGINEER
8/19/26

Express Oil Change & Tire Engineers

Single Building / Right Hand Oil Change / Rear Enter / Side Tire Storage

Cross Roads, Texas (Aubrey)

FINAL

No.	Description	Date
IFP-0	Issued for Permit	06/30/2026
IFB-0	Iss. for Bid/AHJ Rev.	08/12/2026

© 2026 Aho Architects, LLC. All Rights Reserved.

Main Level Plan - Power & Voice/Data

Project number	26013
Date	06/30/2026
Drawn by	TH
Checked by	GW

E300

Scale As indicated

8/25/2026 4:45:54 PM

GENERAL NOTES:

1. OIL CHANGE BUILDING IS A MINOR REPAIR GARAGE AND IS UNCLASSIFIED. SEE MECHANICAL DRAWINGS FOR PROVIDED VENILATION.

2. EXPRESS OIL CHANGE HAS OBTAINED EQUIPMENT AVALABILITY AND SPECIAL VOLUME PRICING ON POWER EQUIPMENT AND LIGHTING CONTROL PACKAGES FROM REXEL. SEE CONTACTS BELOW FOR PRICING AND INFORMATION:

   JEFFREY PARKER
   REXEL
   (M) 508-916-7758
   JEFFREY.PARKER@REXELUSA.COM

   COLIN BLACK
   REXEL
   COLIN.BLACK@REXELUSA.COM

   MIKE MCMAKEN
   REXEL ENERGY SOLUTIONS
   (M) 906-235-2979
   MIKE.MCMAKEN@REXELENERGY.COM

NOTES:

1. 2"EC HOMERUN TO TELEPHONE BACKBOARD ON EQUIPMENT PLATFORM.

2. MOUNT RECEPTACLES ONTO STRUCTURAL COLUMN.

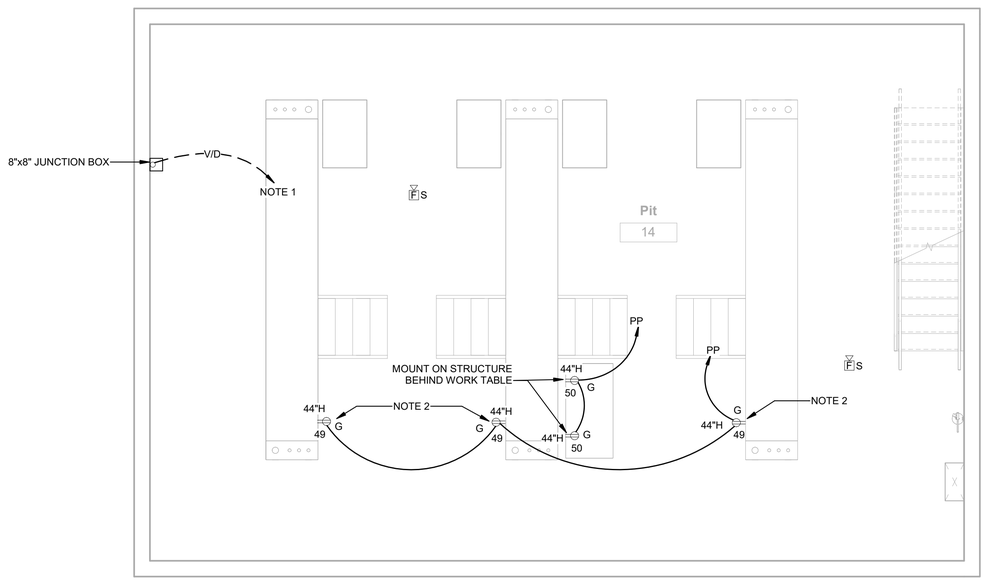

1 Pit Level Plan - Power & Voice/Data
1/4" = 1'-0"

PLAN NORTH

GIDEON WAMAE, P.E.

4120 OVERLOOK CIRCLE, TRUSSVILLE, AL 35173
GWAMAE@GW-ENG.COM | 205.413.4112

AHO ARCHITECTS, LLC

www.ahoarch.com

STATE OF TEXAS
GIDEON M. WAMAE
143851
LICENSED
PROFESSIONAL ENGINEER
8/12/26

Express Oil Change & Tire Engineers

Single Building / Right Hand Oil Change / Rear Enter / Side Tire Storage

Cross Roads, Texas (Aubrey)

FINAL

No.	Description	Date
IFP-0	Issued for Permit	06/30/2026
IFB-0	Iss. for Bid/AHJ Rev.	08/12/2026

© 2026 Aho Architects, LLC.
All Rights Reserved.

Pit Level Plan - Power & Voice/Data

Project number	26013
Date	06/30/2026
Drawn by	TH
Checked by	GW

E301

Scale 1/4" = 1'-0"

8/25/2026 4:49:19 PM

GENERAL NOTES:

1. OIL CHANGE BUILDING IS A MINOR REPAIR GARAGE AND IS UNCLASSIFIED. SEE MECHANICAL DRAWINGS FOR PROVIDED VENTILATION.

NOTES:

1. CONNECT TO 20A, 1 POLE CIRCUIT BREAKER IN PANELBOARD PP THROUGH LIGHTING CONTACTOR C-1. SEE WIRING DIAGRAM ON SHEET E102 FOR MORE INFORMATION.

2. CONNECT TO LIGHTING CIRCUIT AND CONTROLS IN THIS AREA.

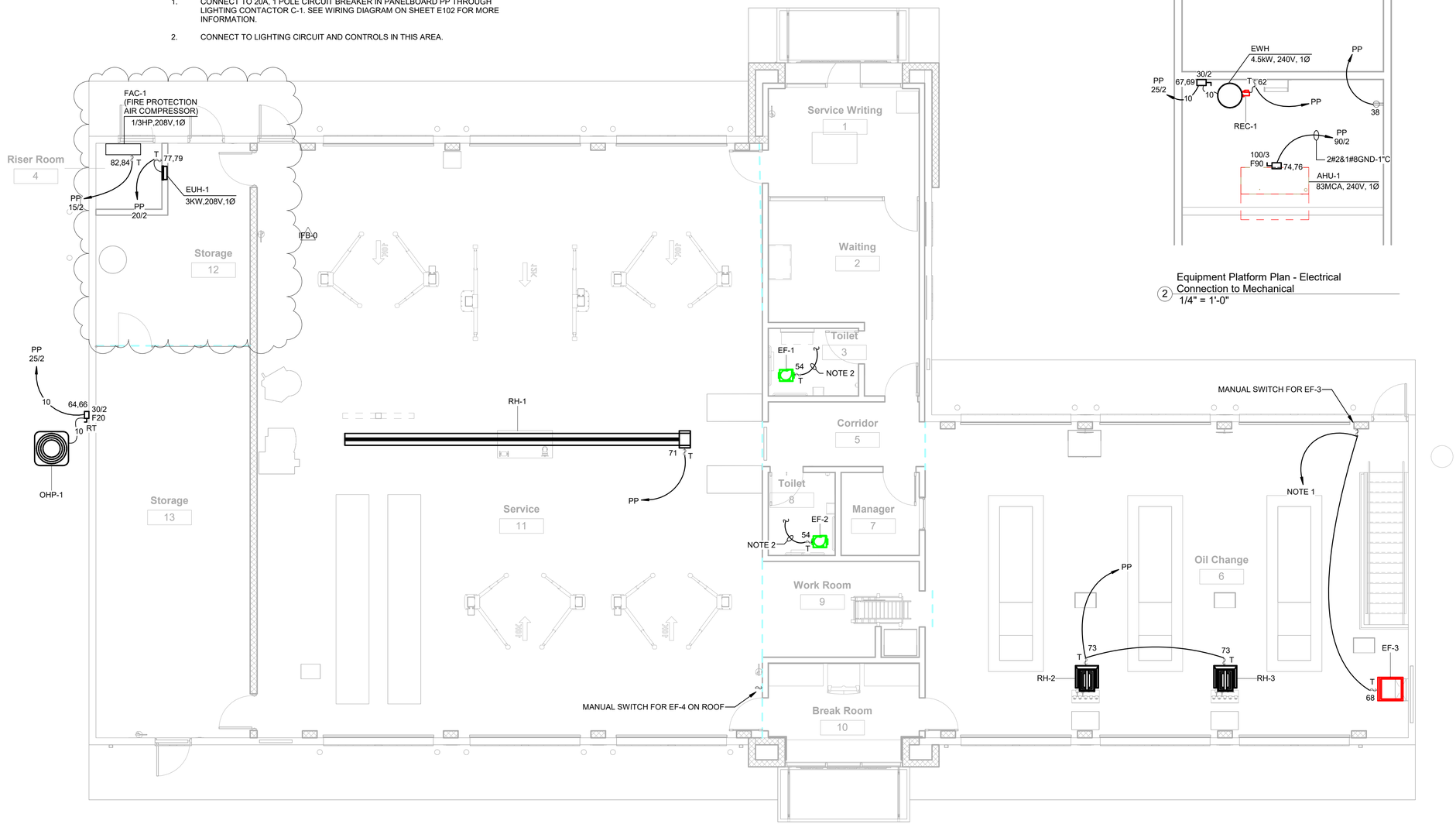

Main Level Plan - Electrical Connection to Mechanical
1 3/16" = 1'-0"

Equipment Platform Plan - Electrical Connection to Mechanical
2 1/4" = 1'-0"

PLAN NORTH

GIDEON WAMAE, P.E.

4120 OVERLOOK CIRCLE, TRUSSVILLE, AL 35173
GWAMAE@GW-ENG.COM | 205.413.4112

AHO ARCHITECTS, LLC
www.ahoarch.com

STATE OF TEXAS
GIDEON M. WAMAE
143851
LICENSED
PROFESSIONAL ENGINEER
8/18/26

Express Oil Change & Tire Engineers

Single Building / Right Hand Oil Change / Rear Enter / Side Tire Storage

Cross Roads, Texas (Aubrey)

FINAL

No.	Description	Date
IFP-0	Issued for Permit	06/30/2026
IFB-0	Iss. for Bid/AHJ Rev.	08/12/2026

© 2026 Aho Architects, LLC. All Rights Reserved.

Main Level Plan - Elec. Conn. to Mech.

Project number	26013
Date	06/30/2026
Drawn by	TH
Checked by	GW

E400

Scale As indicated

8/25/2026 4:46:02 PM

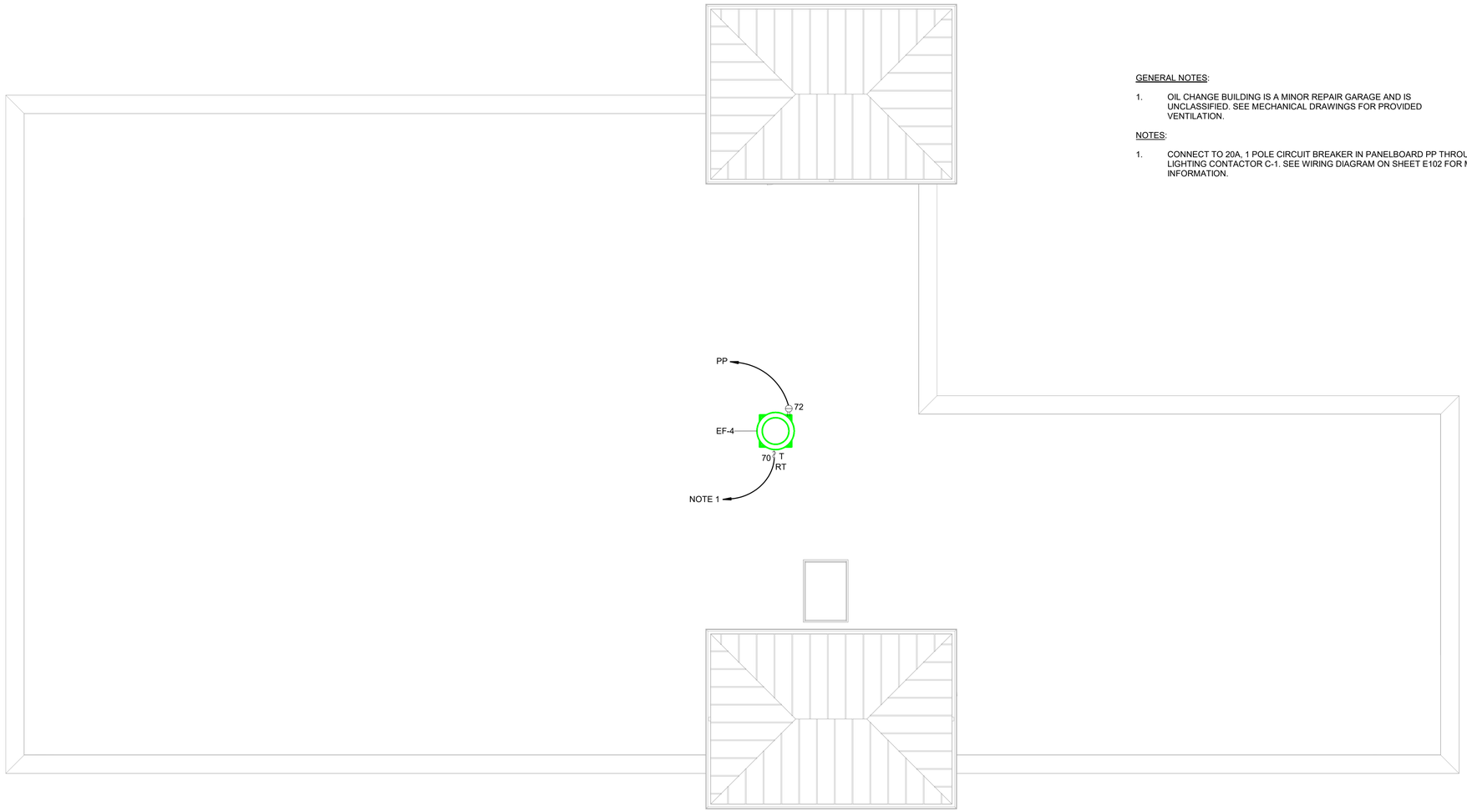

GENERAL NOTES:

1. OIL CHANGE BUILDING IS A MINOR REPAIR GARAGE AND IS UNCLASSIFIED. SEE MECHANICAL DRAWINGS FOR PROVIDED VENTILATION.

NOTES:

1. CONNECT TO 20A, 1 POLE CIRCUIT BREAKER IN PANELBOARD PP THROUGH LIGHTING CONTACTOR C-1. SEE WIRING DIAGRAM ON SHEET E102 FOR MORE INFORMATION.

1 Roof Plan - Electrical Connection to Mechanical
3/16" = 1'-0"

PLAN NORTH

GIDEON WAMAE, P.E.

4120 OVERLOOK CIRCLE, TRUSSVILLE, AL 35173
GWAMAE@GW-ENG.COM | 205.413.4112

AHO ARCHITECTS, LLC
www.ahoarch.com

STATE OF TEXAS
GIDEON M. WAMAE
143851
LICENSED
PROFESSIONAL ENGINEER
8/12/26

Express Oil Change & Tire Engineers

Single Building / Right Hand Oil Change / Rear Enter / Side Tire Storage

Cross Roads, Texas (Aubrey)

FINAL

No.	Description	Date
IFP-0	Issued for Permit	06/30/2026
IFB-0	Iss. for Bid/AHJ Rev.	08/12/2026

© 2026 Aho Architects, LLC.
All Rights Reserved.

Roof Plan - Elec. Conn. to Mech.

Project number	26013
Date	06/30/2026
Drawn by	TH
Checked by	GW

E401

Scale 3/16" = 1'-0"

8/25/2026 4:49:24 PM

SECTION 16010 - ELECTRICAL SPECIFICATIONS

GENERAL REQUIREMENTS

A. Carefully examine General Conditions, other specification Sections, and other drawings (in addition to electrical), in order to be fully acquainted with their effect on electrical work.

B. Do all work in compliance with laws and ordinances and local authorities having jurisdiction and, where applicable, utility companies. Obtain and pay for any and all required permits, inspections, certificates of inspections and approval, and the like, and deliver such certificates to the Architect.

C. Cooperate with other trades and contractors at job. Perform work in such manner and at such times as not to delay work of other trades. Complete all work as soon as the condition of the structure and installation of equipment will permit. Patch, in a satisfactory manner and by the proper craft, any work damaged by electrical work.

D. All equipment (wiring devices, light fixtures, panelboards, disconnect switches, conductors, raceways, boxes, cabinets, circuit breakers, low voltage equipment, auxiliary systems, motors, machines, etc.) used for this project shall be tested by Underwriter's Laboratories, Inc and have "UL" nameplate.

E. Coordinate placement of equipment above ceiling to facilitate proper clearance for serving of equipments.

F. Take finish dimensions at the job site in preference to scale dimensions.

G. Obtain from manufacturer's data on all equipment, the dimensions of which may affect electrical work. Use this data to coordinate proper service characteristics, entry locations, etc., and to ensure minimum clearances are maintained.

H. The electrical contractor shall have had experience of at least the same size and scope as this project, on at least two other projects, within the last 5 years in order to be qualified to bid this project. This qualification shall also apply to his subcontractors.

I. Workmen shall be experienced in their respective trade. Workmanship of installed work shall be first class and will be so judged by the Architect/Engineer. Substandard work shall be removed and replaced.

J. The Bidders shall visit the site to thoroughly familiarize themselves with existing conditions prior to submitting their bid. No allowances will be made for lack of knowledge of existing conditions.

K. Provide one_Year warranty of conformance with drawings and specifications. In addition to the foregoing warranty, Contractor shall and does hereby warrant all materials and equipment furnished under this Division of the Specifications to be free from defects and to function or operate satisfactorily for one year after final acceptance of the work, and that any items not meeting this requirement will be made good by him without cost to owner, provided such defects or failures are not due to abuse, neglect, or lack of reasonable and ordinary maintenance.

L. Unless otherwise specified, provide only new, standard first grade materials throughout, conforming to standards established by Underwriter's Laboratories, Inc., and so marked and labeled, together with manufacturer's brand or trademark. All equipment subject to approval of Architect/Engineer before installation. All like items shall be of one manufacture.

M. Any equipment or materials shown on the drawings to be removed and reinstalled shall be cleaned and, if necessary repaired to like new condition prior to reinstallation.

N. Where shown on the drawings or specified herein, furnish and install electrical equipment. Furnish all materials, hardware, equipment, labor and services required for the installation of complete and properly working installations as shown on the drawings and described herein.

O. All work shall be executed in a workmanlike manner and shall present a neat and mechanical appearance upon completion. Care shall be exercised that all items are plumb, straight, level.

P. Equipment grounding conductors shall be bonded at each enclosure and pole base. All equipment grounding conductors shall be connected to a common bus, bonded to the equipment enclosure.

Q. An equipment grounding jumper shall be installed from the receptacle ground terminal to the outlet box.

CONDUITS

A. Conduit: Rigid and IMC shall be galvanized outside and inside by hot dipping. EMT shall be Electro_Galvanized. Conduit shall be as manufactured by Republic, Wheatland, Triangle, Plttsburgh Standard, Youngstown, or Allied.

B. Sealtight flexible metal conduit shall consist of flexible galvanized steel tubing with a liquidtight jacket of PVC. All flexible conduit shall have a copper bonding conductor wound into conduit body.

C. Couplings and connectors on rigid and IMC shall be standard threaded type, galvanized outside and inside by hot dipping. Clamp type and threadless are not acceptable. Couplings and connectors, for rigid and IMC shall be as manufactured by Raco or Appleton.

D. EMT connectors shall be steel, set screw unless required by code to be compression type, equipped with insulating throats. Connectors couplings shall be O-Z/Gedney 7000ST or 7000RST series, T & B 5123 - 5623 series, Midwest Electric series 1650, or equal series of Raco. Cast metal couplings will not be approved for any location.

E. EMT couplings shall be steel, set screw unless required by code to be compression type. Couplings shall be O-Z/Gedney 6000S or 6000RS series, T & B 5120 - 5620 series, Midwest Electric series 660, or equal series of Raco. Cast metal connectors will not be approved for any location.

F. Connectors raintight: Meyers or approved equal.

G. Bushings on rigid and IMC shall be threaded malleable iron with integral noncombustible insulator. Rigid and IMC bushings shall be O-Z/Gedney "IBC" series, T & B BIM series, Midwest Electric series 1031 - 1043 or equal by Penn Union. Grounding bushings shall be O-Z/Gedney "IBC-L" series, T & B 3870 - 3999 series, Midwest Electric GLL series or equal by Penn Union.

H. Watertight Flex Connectors: O-Z/Gedney, Raco, or Midwest Electric with insulating throat.

I. EMT conduit with set screw shall be used for all branch circuits, power feeders, auxiliary, signaling and controls circuits in none hazardous dry locations for 2" and smaller. EMT may be used exposed where not subject to physical damage. EMT with compression fitting may be used in damp locations up to the 2" limit. Otherwise use rigid or intermediate hot dipped galvanized inside and out steel, threaded for screwed fitting only conduits unless specified on the drawings otherwise.

J. Conduits shall be sized in accordance with the latest National Electrical Code except that conduits containing more than two conductors shall be sized based on 35% fill and 3/4" conduit shall contain no wire larger than #10 and no more than 6#12 or 4#10 wires. Conduit shall be sized larger than required above when so shown on the drawings or when required by local Code. Minimum size conduit shall be 3/4".

K. Where conduit enters boxes, they shall be secured in place with approved insulating fittings.

L. The use of running threads is absolutely prohibited. All conduit shall be jointed with approved conduit couplings. All couplings on IMC and rigid conduit shall be threaded.

M. All conduits shall be supported within 3 feet of each coupling, fitting, outlet box, junction box, cabinet or equipment enclosure Conduit supports shall be independent of ducts, plumbing piping, ceiling supports, etc. Conduits shall not be supported by junction boxes, pull boxes, fixtures, etc.

N. All exposed conduit threads, metal supports, etc., exposed to the elements or exterior of building shall be painted with rust preventive paint.

CONDUCTORS

A. Conductors for general use, sized #10 and smaller, shall be solid copper. Conductors #8 and larger, and any size to motors or vibrating equipment shall be stranded copper.

B. All conductor insulation shall be 600 volt THHN/THWN.

C. Wire connections, #10 and smaller connections shall be made with insulated wire connectors with steel spring connector threads. Wire connectors shall be "Twister" Wire-Nut series as manufactured by Ideal Industries, Inc. or approved equal.

D. On wire larger than #10, shall be made with approved solderless connectors and covered with Scotch #33 electrical tape so that the insulation is equal to conductor insulation.

E. Connection of stranded conductors, #8 and larger, to bus bars in switchboards, panelboards, equipment enclosures, junction boxes, etc. shall be made with individual lugs, size as required by conductor, bolted to bus bar with full size bolts and nuts with lock washers.

F. Conductors and conduits shall be continuous between outlets.

G. No conductor shall be pulled until conduit is cleaned of all foreign matter.

H. Where installed in panelboards, cabinets, wireways, switches and equipment wire and cable shall be neatly formed and tied.

I. Conductors sized #10 AWG and below shall have permanently colored insulation. Conductors sized #8 AWG and above shall be color coded by either permanently colored insulation or by means of colored tape applied to the conductor within 12" of each termination and in each enclosure, junction box, etc.

JUNCTION BOXES

A. Shall be standard type, with knockouts, made of hot dipped galvanized steel, Steel City, Raco, Appleton, or Bowers.

B. Ceiling outlet boxes shall be 4" octagon 1-1/2" deep or larger as required due to number of wires.

C. Boxes shall be provided with approved 3/8" fixture studs when required to support stem mounted light fixtures.

D. Except when located in exposed concrete block, switch and receptacle boxes shall be 4" square with trim ring for single gang installation. Appropriate gang boxes shall be used for mounting ganged switches.

E. When installed in exposed concrete block, switch and receptacle boxes shall be square type designed for exposed block installation.

F. Outlet boxes shall be securely fastened to structural members and shall not be supported by dry wall, gypsum board, plaster, etc. The device or plate installed in conjunction with the outlet box shall not be used for support. There shall be no more knockouts opened in any outlet box than are required. Boxes shall be sealed during construction.

G. Under no circumstances shall through-the-wall boxes be used. Back to back boxes shall be staggered at least 3 inches, except in fire rated partitions, in which case, back to back boxes shall be staggered at least 24 inches.

H. Outlet boxes two gangs and wider shall not be supported by attachment clips or any means which supports the boxes from less than two opposite sides of the box. Such outlet boxes in stud walls shall be supported securely by support members spanning between studs.

I. Outlet boxes installed in fire rated partitions shall be boxed in with wall board or other suitable fire rated material as required to maintain or restore the fire rating of the assembly.

WIRING DEVICES

A. Manufacturers' Names: Shortened versions (shown in parentheses) of the following manufacturers' names are used in other Part 2 articles:

1. Cooper Wiring Devices; a division of Cooper Industries, Inc. (Cooper).
2. Hubbell Incorporated; Wiring Device-Kellems (Hubbell).
3. Leviton Mfg. Company Inc. (Leviton).
4. Pass & Seymour/Legrand; Wiring Devices & Accessories (Pass & Seymour).

B. Convenience Receptacles, 125 V, 20 A: Comply with NEMA WD 1, NEMA WD 6 configuration 5-20R, and UL 498.

1. Products: Subject to compliance with requirements, provide one of the following:
   a. Cooper; 5351 (single), 5352 (duplex).
   b. Hubbell; HBL5351 (single), CR5352 (duplex).
   c. Leviton; 5891 (single), 5352 (duplex).
   d. Pass & Seymour; 5381 (single), 5352 (duplex).

C. Duplex GFCI Convenience Receptacles, 125 V, 20 A:

1. Products: Subject to compliance with requirements, provide one of the following:
   a. Cooper; GF20.
   b. Pass & Seymour; 2084.

A. Switches, 120/277 V, 20 A:

1. Products: Subject to compliance with requirements, provide one of the following:
   a. Cooper; 2221 (single pole), 2222 (two pole), 2223 (three way), 2224 (four way).
   b. Hubbell; CS1221 (single pole), CS1222 (two pole), CS1223 (three way), CS1224 (four way).
   c. Leviton; 1221-2 (single pole), 1222-2 (two pole), 1223-2 (three way), 1224-2 (four way).
   d. Pass & Seymour; 20AC1 (single pole), 20AC2 (two pole), 20AC3 (three way), 20AC4 (four way).

B. Single and combination plate types to match corresponding wiring devices.

1. Plate-Securing Screws: Metal with head color to match plate finish.
2. Material for Finished Spaces: stainless steel 302 **0.04-inch-** (1-mm-) thick.
3. Material for Unfinished Spaces: Galvanized steel.
4. Material for Damp Locations: Cast aluminum with spring-loaded lift cover, and listed and labeled for use in "wet locations."

F. Wet-Location, Weatherproof Cover Plates: NEMA 250, complying with type 3R weather-resistant, extra duty, die-cast aluminum with lockable in-use cover.

G. Color: Wiring device catalog numbers in Section Text do not designate device color.

1. Wiring Devices Connected to Normal Power System: Gray unless otherwise indicated or required by NFPA 70 or device listing.
2. Wiring Devices Connected to Emergency Power System: Red.

H. Comply with NECA 1, including the mounting heights listed in that standard, unless otherwise noted.

I. Coordination with Other Trades:

1. Take steps to insure that devices and their boxes are protected. Do not place wall finish materials over device boxes and do not cut holes for boxes with routers that are guided by riding against outside of the boxes.
2. Keep outlet boxes free of plaster, drywall joint compound, mortar, cement, concrete, dust, paint, and other material that may contaminate the raceway system, conductors, and cables.
3. Install device boxes in brick or block walls so that the cover plate does not cross a joint unless the joint is troweled flush with the face of the wall.
4. Install wiring devices after all wall preparation, including painting, is complete.

J. Conductors:

1. Do not strip insulation from conductors until just before they are spliced or terminated on devices.
2. Strip insulation evenly around the conductor using tools designed for the purpose. Avoid scoring or nicking of solid wire or cutting strands from stranded wire.
3. The length of free conductors at outlets for devices shall meet provisions of NFPA 70, Article 300, without pigtails.
4. Existing Conductors:
   a. Cut back and pigtail, or replace all damaged conductors.
   b. Straighten conductors that remain and remove corrosion and foreign matter.
   c. Pigtailing existing conductors is permitted provided the outlet box is large enough.

K. Device Installation:

1. Replace all devices that have been in temporary use during construction or that show signs that they were installed before building finishing operations were complete.
2. Keep each wiring device in its package or otherwise protected until it is time to connect conductors.
3. Do not remove surface protection, such as plastic film and smudge covers, until the last possible moment.
4. Connect devices to branch circuits using pigtails that are not less than 6 inches (152 mm) in length.
5. When there is a choice, use side wiring with binding-head screw terminals. Wrap solid conductor tightly clockwise, 2/3 to 3/4 of the way around terminal screw.
6. Use a torque screwdriver when a torque is recommended or required by the manufacturer.
7. When conductors larger than No. 12 AWG are installed on 15- or 20-A circuits, splice No. 12 AWG pigtails for device connections.
8. Tighten unused terminal screws on the device.
9. When mounting into metal boxes, remove the fiber or plastic washers used to hold device mounting screws in yokes, allowing metal-to-metal contact.

L. Receptacle Orientation:

10. Install ground pin of vertically mounted receptacles up, and on horizontally mounted receptacles to the right.
11. Install hospital-grade receptacles in patient-care areas with the ground pin or neutral blade at the top.

M. Device Plates: Do not use oversized or extra-deep plates. Repair wall finishes and remount outlet boxes when standard device plates do not fit flush or do not cover rough wall opening.

N. Dimmers:

1. Install dimmers within terms of their listing.
2. Verify that dimmers used for fan speed control are listed for that application.
3. Install unshared neutral conductors on line and load side of dimmers according to manufacturers' device listing conditions in the written instructions.

O. Arrangement of Devices: Unless otherwise indicated, mount flush, with long dimension vertical and with grounding terminal of receptacles on top. Group adjacent switches under single, multigang wall plates.

P. Adjust locations of floor service outlets and service poles to suit arrangement of partitions and furnishings.

PANELBOARDS

A. Product Data: For each type of panelboard, switching and overcurrent protective device, transient voltage suppression device, accessory, and component indicated. Include dimensions and manufacturers' technical data on features, performance, electrical characteristics, ratings, and finishes.

B. Source Limitations: Obtain panelboards, overcurrent protective devices, components, and accessories from single source from single manufacturer.

1. Comply with NEMA PB 1 including handling requirements.

D. Comply with NFPA 70.

E. Coordinate layout and installation of panelboards and components with other construction that penetrates walls or is supported by them, including electrical and other types of equipment, raceways, piping, encumbrances to workspace clearance requirements, and adjacent surfaces. Maintain required workspace clearances and required clearances for equipment access doors and panels.

F. Enclosures: Flush-and surface-mounted cabinets as shown on drawings.

1. Rated for environmental conditions at installed location.
   a. Outdoor Locations: NEMA 250, Type 4X (stainless steel).
   b. Indoor location NEMA 1 with hinged Front Cover: Entire front trim hinged to box and with standard door within hinged trim cover.
2. Finishes:
   a. Back Boxes: Stainless Steel.
3. Directory Card: Inside panelboard door, mounted in transparent card holder.

G. Phase, Neutral, and Ground Buses:

1. Material: Hard-drawn copper, 98 percent conductivity.
2. Equipment Ground Bus: Adequate for feeder and branch-circuit equipment grounding conductors; bonded to box.

H. Future Devices: Mounting brackets, bus connections, filler plates, and necessary appurtenances required for future installation of devices.

I. Panelboard Short-Circuit Current Rating: Fully rated to interrupt symmetrical short-circuit current available at terminals. See drawings for rating.

J. Manufacturers: Subject to compliance with requirements, provide products by either: Eaton, General Electric Company; Siemens, and Square D.

K. Branch Overcurrent Protective Devices for Circuit-Breaker Frame Sizes Larger Than 125 A: Bolt-on circuit breakers; plug-in circuit breakers where individual positive-locking device requires mechanical release for removal. Branch circuit breakers shall be HACR type. Molded-Case Circuit Breaker (MCCB): Comply with UL 489, with interrupting capacity to meet available fault currents.

L. Examine panelboards before installation. Reject panelboards that are damaged or rusted or have been subjected to water saturation.

M. Examine elements and surfaces to receive panelboards for compliance with installation tolerances and other conditions affecting performance of the Work.

N. Proceed with installation only after unsatisfactory conditions have been corrected.

O. Install panelboards and accessories according to NEMA PB 1.1.

P. Mount panelboard cabinet plumb and rigid without distortion of box. Mount recessed panelboards with fronts uniformly flush with wall finish and mating with back box.

Q. Install filler plates in unused spaces.

R. Arrange conductors in gutters into groups and bundle and wrap with wire ties after completing load balancing.

TEMPORARY POWER

A. The electrical contractor shall provide temporary electrical wiring for construction. The temporary service shall be single phase, three wire, 120/240 volts fused at main disconnect. All receptacles on this temporary service shall be protected by ground fault interruptible circuit breakers.

GIDEON WAMAE, P.E.

4120 OVERLOOK CIRCLE, TRUSSVILLE, AL 35173
GWAMAE@GW-ENG.COM | 205.413.4112

AHO ARCHITECTS, LLC
www.ahoarch.com

STATE OF TEXAS
GIDEON M. WAMAE
143851
LICENSED
PROFESSIONAL ENGINEER
8/14/26

Express Oil Change & Tire Engineers
Single Building / Right Hand Oil Change / Rear Enter / Side Tire Storage
Cross Roads, Texas (Aubrey)

FINAL

No.	Description	Date
IFP-0	Issued for Permit	06/30/2026
IFB-0	Iss. for Bid/AHJ Rev.	08/12/2026

© 2026 Aho Architects, LLC.
All Rights Reserved.

Specifications

Project number	26013
Date	06/30/2026
Drawn by	TH
Checked by	GW

E500

Scale NO SCALE

8/25/2026 4:40:10 PM

COMcheck Software Version COMcheckWeb
Interior Lighting Compliance Certificate

Project Information

Energy Code: 2021 IECC
Project Title: Express Oil Change & Tire Engineers - Cross Roads, TX
Project Type: New Construction

Construction Site:
Cross Roads, Texas

Owner/Agent:
Express Oil Change & Tire Engineers
Hoover, Alabama

Designer/Contractor:
Taylor Higginbotham
GW Engineering
Trussville, Alabama

Additional Efficiency Package(s)
Credits: 10.0 Required 28.0 Proposed
Reduced lighting power, 28.0 credit

Allowed Interior Lighting Power

A Area Category	B Floor Area (ft2)	C Allowed Watts / ft2	D Allowed Watts
1-Automotive Facility	6782	0.75	5086
		Total Allowed Watts =	5086

Proposed Interior Lighting Power

A Fixture ID : Description / Lamp / Wattage Per Lamp / Ballast	B Lamps/ Fixture	C # of Fixture	D Fixture Watt.	E (C X D)
1-Automotive Facility				
LED: L1P: Other:	1	28	90	2520
LED: L2/L2P: Other:	1	17	35	595
LED: L3/L3E: Other:	1	10	38	380
			Total Proposed Watts =	3495

Interior Lighting PASSES: Design 31% better than code

Interior Lighting Compliance Statement
Compliance Statement: The proposed interior lighting design represented in this document is consistent with the building plans, specifications, and other calculations submitted with this permit application. The proposed interior lighting systems have been designed to meet the 2021 IECC requirements in COMcheck Version COMcheckWeb and to comply with any applicable mandatory requirements listed in the Inspection Checklist.

Taylor Higginbotham — Name - Title
Taylor Higginbotham — Signature
06/29/2026 — Date

COMcheck Software Version COMcheckWeb
Exterior Lighting Compliance Certificate

Project Information

Energy Code: 2021 IECC
Project Title: Express Oil Change & Tire Engineers - Cross Roads, TX
Project Type: New Construction
Exterior Lighting Zone 2 (Neighborhood business district (LZ2))

Construction Site:
Cross Roads, Texas

Owner/Agent:
Express Oil Change & Tire Engineers
Hoover, Alabama

Designer/Contractor:
Taylor Higginbotham
GW Engineering
Trussville, Alabama

Allowed Exterior Lighting Power

A Area/Surface Category	B Quantity	C Allowed Watts /	D Tradable Wattage	E Allowed Watts (B X C)
Entry canopy	9 ft2	0.25	Yes	2
Illuminated area of facade wall or surface	1700 ft2	0.07	No	128
			Total Tradable Watts (a) =	2
			Total Allowed Watts =	130
			Total Allowed Supplemental Watts (b) =	400

(a) Wattage tradeoffs are only allowed between tradable areas/surfaces.
(b) A supplemental allowance equal to 400 watts may be applied toward compliance of both non-tradable and tradable areas/surfaces.

Proposed Exterior Lighting Power

A Fixture ID : Description / Lamp / Wattage Per Lamp / Ballast	B Lamps/ Fixture	C # of Fixture	D Fixture Watt.	E (C X D)
Entry canopy (9 ft2): Tradable Wattage				
LED: L4E/L5: Other:	1	7	38	266
Illuminated area of facade wall or surface (1700 ft2): Non-tradable Wattage				
LED: L4: Other:	1	5	38	190
			Total Tradable Proposed Watts =	266

Exterior Lighting PASSES: Design 22% better than code

Exterior Lighting Compliance Statement
Compliance Statement: The proposed exterior lighting design represented in this document is consistent with the building plans, specifications, and other calculations submitted with this permit application. The proposed exterior lighting systems have been designed to meet the 2021 IECC requirements in COMcheck Version COMcheckWeb and to comply with any applicable mandatory requirements listed in the Inspection Checklist.

Taylor Higginbotham — Name - Title
Taylor Higginbotham — Signature
06/29/2026 — Date

COMcheck Software Version COMcheckWeb
Inspection Checklist
Energy Code: 2021 IECC

Requirements: 0.0% were addressed directly in the COMcheck software
Text in the "Comments/Assumptions" column is provided by the user in the COMcheck Requirements screen. For each requirement, the user certifies that a code requirement will be met and how that is documented, or that an exception is being claimed. Where compliance is itemized in a separate table, a reference to that table is provided.

Section # & Req.ID	Plan Review	Complies?	Comments/Assumptions
C103.2 [PR4][1]	Plans, specifications, and/or calculations provide all information with which compliance can be determined for the interior lighting and electrical systems and equipment and document where exceptions to the standard are claimed. Information provided should include interior lighting power calculations, wattage of bulbs and ballasts, transformers and control devices.	☐Complies ☐Does Not ☐Not Observable ☐Not Applicable	
C103.2 [PR8][1]	Plans, specifications, and/or calculations provide all information with which compliance can be determined for the exterior lighting and electrical systems and equipment and document where exceptions to the standard are claimed. Information provided should include exterior lighting power calculations, wattage of bulbs and ballasts, transformers and control devices.	☐Complies ☐Does Not ☐Not Observable ☐Not Applicable	
C406 [PR9][1]	Plans, specifications, and/or calculations provide all information with which compliance can be determined for the additional energy efficiency package options.	☐Complies ☐Does Not ☐Not Observable ☐Not Applicable	

Additional Comments/Assumptions:

1 High Impact (Tier 1)	2 Medium Impact (Tier 2)	3 Low Impact (Tier 3)

Section # & Req.ID	Rough-In Electrical Inspection	Complies?	Comments/Assumptions
C405.2.3.1 [EL22][1]	Spaces required to have light-reduction controls have a manual control that allows the occupant to reduce the connected lighting load in a reasonably uniform illumination pattern >= 50 percent.	☐Complies ☐Does Not ☐Not Observable ☐Not Applicable	
C405.2.1, C405.2.1.1 [EL18][1]	Occupancy sensors installed in classrooms/lecture/training rooms, conference/meeting/multipurpose rooms, copy/print rooms, lounges/breakrooms, enclosed offices, open plan office areas, restrooms, storage rooms, locker rooms, corridors, warehouse storage areas, and other spaces <= 300 sqft that are enclosed by floor-to-ceiling height partitions. Reference section language C405.2.1.2 for control function in warehouses and section C405.2.1.3 for open plan office spaces.	☐Complies ☐Does Not ☐Not Observable ☐Not Applicable	
C405.2.1.2 [EL19][1]	Occupancy sensors control function in warehouses: In warehouses, the lighting in aisleways and open areas is controlled with occupant sensors that automatically reduce lighting power by 50% or more within 20 minutes of when the areas are unoccupied. The occupant sensors control lighting in each aisleway independently and do not control lighting beyond the aisleway being controlled by the sensor. Lights not turned off by occupant sensors is done so by time-switch.	☐Complies ☐Does Not ☐Not Observable ☐Not Applicable	
C405.2.1.3 [EL20][1]	Occupant sensor control function in open plan office areas: Occupant sensor controls in open office spaces >= 300 sq.ft. have controls 1) configured so that general lighting can be controlled separately in control zones with floor areas <= 600 sq.ft. within the space, 2) general lighting in each zone permitted to turn on upon occupancy in control zone, 3) automatically turn off general lighting in all control zones within 20 minutes after all occupants have left the space. 4) are configured so that general lighting power in each control zone is reduced by >= 80% of the full zone general lighting power within 20 minutes of all occupants leaving that control zone.	☐Complies ☐Does Not ☐Not Observable ☐Not Applicable	
C405.2.2.1 [EL21][2]	Each area not served by occupancy sensors (per C405.2.1.1) have time-switch controls and functions detailed in sections C405.2.2.1.	☐Complies ☐Does Not ☐Not Observable ☐Not Applicable	

1 High Impact (Tier 1)	2 Medium Impact (Tier 2)	3 Low Impact (Tier 3)

Section # & Req.ID	Rough-In Electrical Inspection	Complies?	Comments/Assumptions
C405.2.4.1, C405.2.4.2 [EL23][2]	Daylight zones provided with individual controls that control the lights independent of general area lighting. See code section C405.2.3 Daylight-responsive controls for applicable spaces, C405.2.3.1 Daylight-responsive control function and section C405.2.3.2 Sidelit zone.	☐Complies ☐Does Not ☐Not Observable ☐Not Applicable	
C405.2.5 [EL27][1]	Additional interior lighting power allowed for special functions per the approved lighting plans and is automatically controlled and separated from general lighting.	☐Complies ☐Does Not ☐Not Observable ☐Not Applicable	
C405.2.7 [EL28][1]	Automatic lighting controls for exterior lighting installed. Controls will be daylight controlled, set based on business operation time-of-day, or reduce connected lighting > 30%.	☐Complies ☐Does Not ☐Not Observable ☐Not Applicable	
C405.7 [EL26][2]	Low-voltage dry-type distribution electric transformers meet the minimum efficiency requirements of Table C405.6.	☐Complies ☐Does Not ☐Not Observable ☐Not Applicable	
C405.8 [EL27][2]	Electric motors meet the minimum efficiency requirements of Tables C405.7(1) through C405.7(4). Efficiency verified through certification under an approved certification program or the equipment efficiency ratings shall be provided by motor manufacturer (where certification programs do not exist).	☐Complies ☐Does Not ☐Not Observable ☐Not Applicable	
C405.9.1, C405.9.2 [EL28][2]	Escalators and moving walks comply with ASME A17.1/CSA B44 and have automatic controls configured to reduce speed to the minimum permitted speed in accordance with ASME A17.1/CSA B44 or applicable local code when not conveying passengers.	☐Complies ☐Does Not ☐Not Observable ☐Not Applicable	
C405.10 [EL29][2]	Total voltage drop across the combination of feeders and branch circuits <= 5%.	☐Complies ☐Does Not ☐Not Observable ☐Not Applicable	
C405.1.1 [EL30][2]	At least 90% of dwelling unit permanently installed lighting shall have lamp efficacy >= 65 lm/W or luminaires with efficacy >= 45 lm/W or comply with C405.2.4 or C405.3.	☐Complies ☐Does Not ☐Not Observable ☐Not Applicable	
C405.11, C405.11.1 [EL31][2]	50% of 15/20 amp receptacles installed in enclosed offices, conference rooms, copy rooms, break rooms, classrooms and workstations and > 25% of branch circuit feeders for modular furniture will have automatic receptacle control in accordance with C405.11.1.	☐Complies ☐Does Not ☐Not Observable ☐Not Applicable	

Additional Comments/Assumptions:

1 High Impact (Tier 1)	2 Medium Impact (Tier 2)	3 Low Impact (Tier 3)

Section # & Req.ID	Final Inspection	Complies?	Comments/Assumptions
C303.3, C408.2.5.2 [FI17][2]	Furnished O&M instructions for systems and equipment to the building owner or designated representative.	☐Complies ☐Does Not ☐Not Observable ☐Not Applicable	
C405.5.1 [FI19][1]	Exterior lighting power is consistent with what is shown on the approved lighting plans, demonstrating proposed watts are less than or equal to allowed watts.	☐Complies ☐Does Not ☐Not Observable ☐Not Applicable	*See the Exterior Lighting fixture schedule for values.*
C406.3 [FI67][1]	Reduced lighting power - this credit specifies that the connected lighting power is >= 10% more efficient than 2021 IECC requirements.	☐Complies ☐Does Not ☐Not Observable ☐Not Applicable	
C408.1.1 [FI57][1]	Building operations and maintenance documents will be provided to the owner. Documents will cover manufacturers' information, specifications, programming procedures and means of illustrating to owner how building, equipment and systems are intended to be installed, maintained, and operated.	☐Complies ☐Does Not ☐Not Observable ☐Not Applicable	
C408.2.5 [FI16][2]	Furnished as-built drawings for electric power systems within 90 days of system acceptance.	☐Complies ☐Does Not ☐Not Observable ☐Not Applicable	
C408.3 [FI13][1]	Lighting systems have been tested to ensure proper calibration, adjustment, programming, and operation.	☐Complies ☐Does Not ☐Not Observable ☐Not Applicable	

Additional Comments/Assumptions:

1 High Impact (Tier 1)	2 Medium Impact (Tier 2)	3 Low Impact (Tier 3)

GIDEON WAMAE, P.E.
4120 OVERLOOK CIRCLE, TRUSSVILLE, AL 35173
GWAMAE@GW-ENG.COM | 205.413.4112

AHO ARCHITECTS, LLC
www.ahoarch.com

STATE OF TEXAS
GIDEON M. WAMAE
143851
LICENSED
PROFESSIONAL ENGINEER
8/12/26

Express Oil Change & Tire Engineers
Single Building / Right Hand Oil Change / Rear Enter / Side Tire Storage
Cross Roads, Texas (Aubrey)

FINAL

No.	Description	Date
IFP-0	Issued for Permit	06/30/2026
IFB-0	Iss. for Bid/AHJ Rev.	08/12/2026

© 2026 Aho Architects, LLC.
All Rights Reserved.

COMcheck

Project number	26013
Date	06/30/2026
Drawn by	TH
Checked by	GW

E600

Scale NO SCALE

8/25/2026 4:40:10 PM